0.8mm Pitch Stacking Height 5 to 9mm Connector

FX6 Series

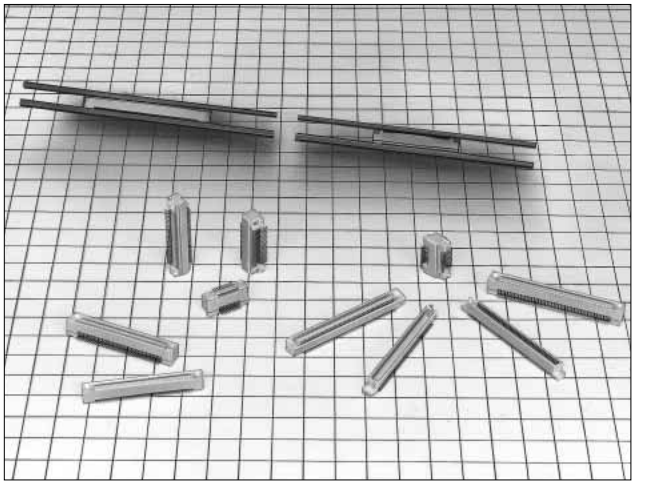

Stacking Height: 5 to 9mm

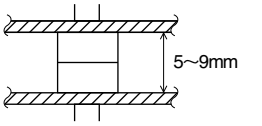

Mounting area 50% OFF, compared with the half pitch connector

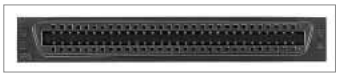

Half pitch connector
(FX2 series)

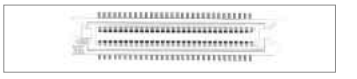

FX6 series
(If compared with 60 contacts)

■Features

1. Stacking Height 5 to 9mm
The board to board stacking height can be set at every millimeter between 5 and 9mm.

2. Effective Contact Length 1.7mm
Despite the low profile type connector, the connector has the 1.7mm long effective contact length and provides a margin sufficient to contact.

3. Mating Guide
The self-alignment for mating action exhibits a high guide level at ±1mm, and makes the mating process easier by providing the guide rib.

4. Automatic Mounting
The standard packaging specification specifies the stick package, considering the automatic mount, while the emboss package can also correspond to the connector with less than 80 contacts. (However, the product is limited to 80 contacts.)

5. SMT Coplanarity
The lead coplanarity on the SMT soldered area is maintained with the high accuracy of less than 0.1mm.

■Applications

Note PC, business equipments such as handy terminals, and other equipment which require miniaturization or light-weight.

■Product Specifications

Rating	Current rating 0.5A Voltage rating 100V AC	Operating Temperature Range -55℃ to +85℃ Note 1. Operating Humidity Range 40% to 80%	Storage Temperature Range -10℃ to +60℃ Note 2. Storage Humidity Range 40% to 70%

Item	Specification	Condition
1. Insulation Resistance	100M ohms min	250V DC
2. Withstanding voltage	No flashover or insulation breakdown.	300V AC/1 minute
3. Contact Resistance	40m ohms max.	100mA
4. Vibration	No electrical discontinuity of 1μs or more	Frequency: 10 to 55 Hz, single amplitude of 0.75 mm, 2 hours in each of the 3 directions.
5. Humidity (Steady state)	Contact resistance: 50m ohms max. Insulation resistance: 100m ohms min.	96 hours at temperature of 40℃ and humidity of 90% to 95%
6. Temperature Cycle	Contact resistance: 50m ohms max: Insulation resistance: 100m ohms min.	(-55℃: 30 minutes 15 to 35℃: 2 to 3 minutes 85℃: 30 minutes 15 to 35℃: 2 to 3minutes)5 cycles
7. Durability (Mating/un-mating)	Contact resistance: 50m ohms max.	100 cycles
8. Resistance to Soldering heat	No deformation of components affecting performance.	Reflow: At the recommended temperature profile
		Manual soldering: 360℃ for 5 seconds

Note 1: Includes temperature rise caused by current flow.
Note 2: The term "storage" refers to products stored for long period of time prior to mounting and use. Operating Temperature Range and Humidity range covers non conducting condition of installed connectors in storage, shipment or during transportation.
Note 3. Information contained in this catalog represents general requirements for this Series. Contact us for the drawings and specifications for a specific part number shown.

Apr.1.2024 Copyright 2024 HIROSE ELECTRIC CO., LTD. All Rights Reserved.

■Material

Part	Material	Finish		Remarks
Insulation	PPS	Light brown		UL94V-0
Header Contact	Phosphor bronze	Contact area	Gold plated	————
Receptacle Contact		Lead area	Tin plated	————

Note 1 : The black dots on the insulater will not affect performance.
Note 2 : FX6(A)-∗P-0.8SV(∗) is gold plated.

■Ordering Information

FX6 (A) - ∗ P - 0.8 SV 1 (91)
❶ ❷ ❸ ❹ ❺ ❻ ❼ ❽

❶ Series Name: FX6	❻ Contact type SV: Board vertical type
❷ Blank: With boss A : Without boss	❼ Product Height Variable Blank : Standard, 1: +1mm 2 : +2mm
❸ Number of Contacts : 20,40,50,60,80,100	❽ Packaging Style (71) : Stick packaging (No pick & place tape) (91) : Stick packaging (Pick & place tape) (92) : Embossed tape packaging (No pick & place tape) (93) : Embossed tape packaging (Pick & place Stick tape)
❹ Connector Type P: Header S: Receptacle	
❺ Contact Pitch: 0.8mm	

■Stacking Height Variation

Unit: mm

	FX6(A)-∗S-0.8SV	FX6(A)-∗S-0.8SV2
FX6(A)-∗P-0.8SV	5	7
FX6(A)-∗P-0.8SV1	6	8
FX6(A)-∗P-0.8SV2	7	9

(∗ indicates 20, 40, 50, 60, 80, and 100 contacts.)

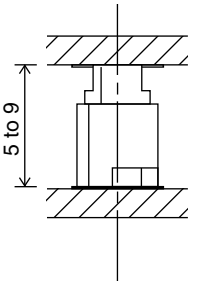

■Packaging Type

Packaging Type	Number of Contacts	20 contacts	40 contacts	50 contacts	60contacts	80 contacts	100 contacts
Stick Packaging	Packaged Product Pieces	33 pieces	22 pieces	19 pieces	16 pieces	13 pieces	11 pieces
	Sales Unit	Order by doubling the number of pieces contained in the product. (Example) In case of 20 contacts,33 pieces, 66 pieces,...					
Embossed Tape Packaging	Tape Width	24mm	44mm	44mm	44mm	56mm	
	Product Pitch	12mm					
	Emboss Reel Diameter	FX6(A)−∗S-0.8SV ……ϕ330mm FX6(A)−∗P−0.8SV.FX6(A)−∗S-0.8SV2 ……ϕ360mm FX6(A)−∗P−0.8SV1.FX6(A)−∗P-0.8SV2 ……ϕ380mm					
	Packaged Product Pieces	1000 pieces packaged per reel					
	Sales Unit	Per reel					

Apr.1.2024 Copyright 2024 HIROSE ELECTRIC CO., LTD. All Rights Reserved.

Apr.1.2024 Copyright 2024 HIROSE ELECTRIC CO., LTD. All Rights Reserved.

With Boss Type

■Header-Stacking Height: Standard type

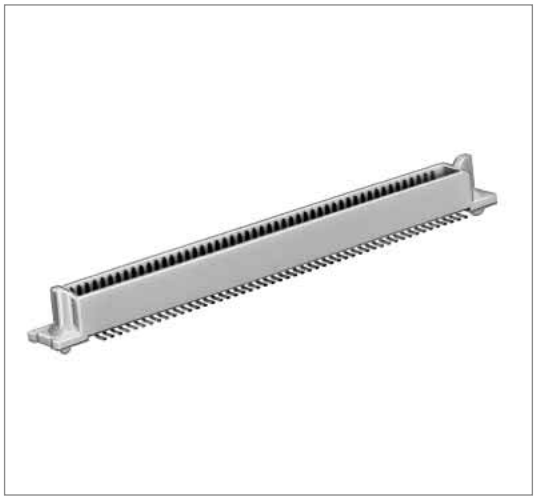

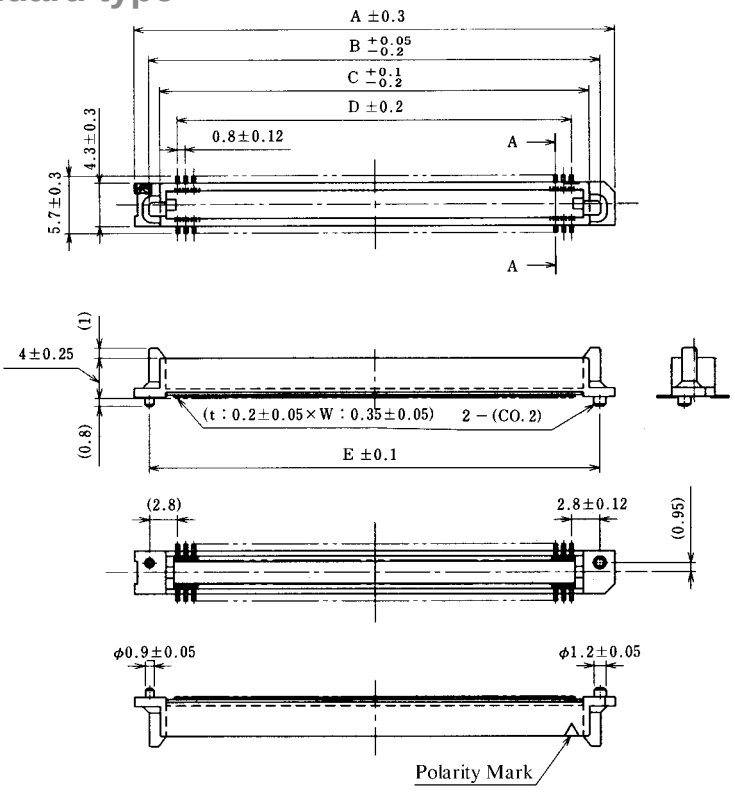

◆PCB mounting pattern

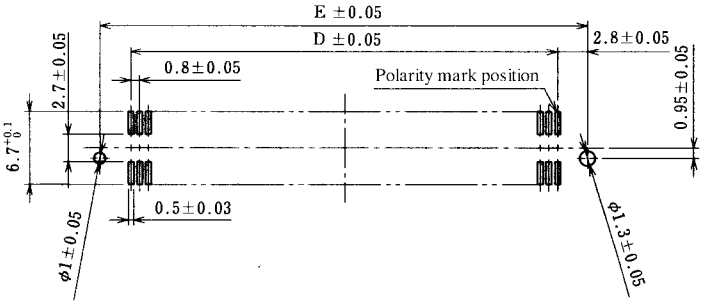

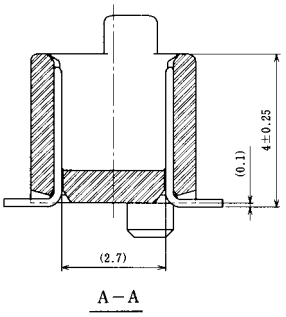

Unit: mm

Part Number	CL No.	Number of Contacts	A	B	C	D	E	RoHS
FX6- 20P-0.8SV(71)	576-0001-3-71	20	15.8	12.9	10.7	7.2	12.8	YES
FX6- 40P-0.8SV(71)	576-0003-9-71	40	23.8	20.9	18.7	15.2	20.8	
FX6- 50P-0.8SV(71)	576-0004-1-71	50	27.8	24.9	22.7	19.2	24.8	
FX6- 60P-0.8SV(71)	576-0005-4-71	60	31.8	28.9	26.7	23.2	28.8	
FX6- 80P-0.8SV(71)	576-0007-0-71	80	39.8	36.9	34.7	31.2	36.8	
FX6-100P-0.8SV(71)	576-0008-2-71	100	47.8	44.9	42.7	39.2	44.8	

Note:Determine a quantity of the stick package product for delivery, multiplying the insertion pieces per contact number by an integer.
Please make sure that a quantity of the stick package product for delivery is determined per reel (1000 pieces).
(Refer to the delivery form item on page A144 for details.)

Apr.1.2024 Copyright 2024 HIROSE ELECTRIC CO., LTD. All Rights Reserved.

With Boss Type

■Header-Stacking Height: Standard type

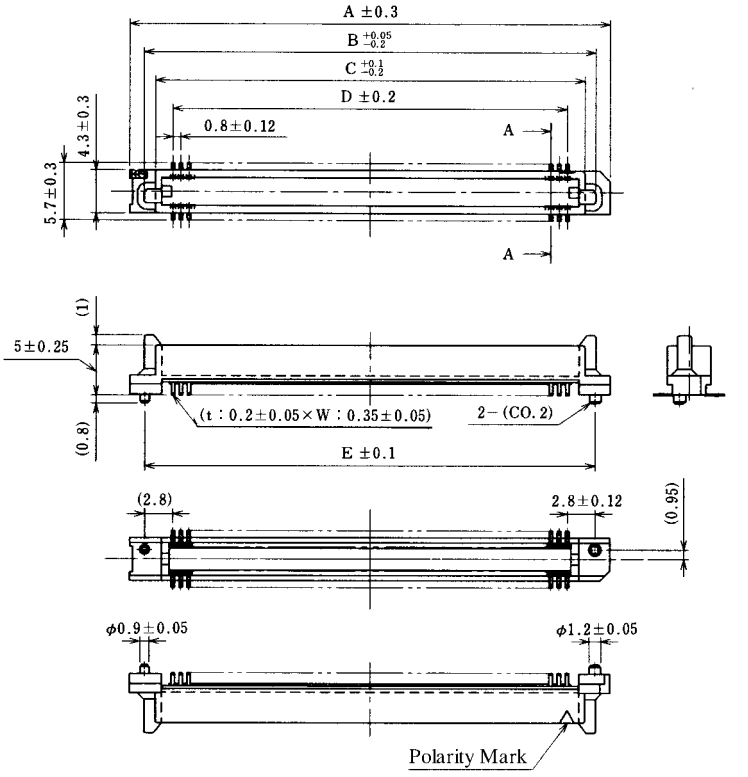

◆PCB mounting pattern

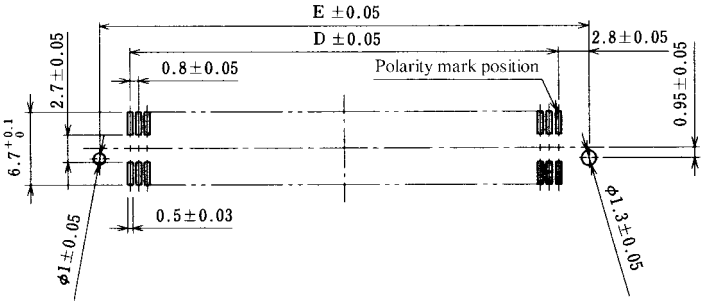

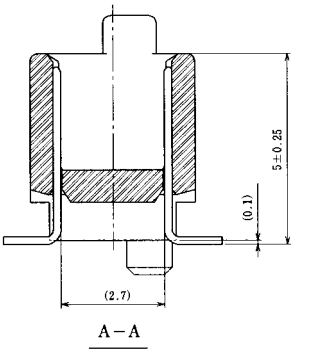

Unit: mm

Part Number	CL No.	Number of Contacts	A	B	C	D	E	RoHS
FX6- 20P-0.8SV1(71)	576-0021-0-71	20	15.8	12.9	10.7	7.2	12.8	YES
FX6- 40P-0.8SV1(71)	576-0023-6-71	40	23.8	20.9	18.7	15.2	20.8	
FX6- 50P-0.8SV1(71)	576-0024-9-71	50	27.8	24.9	22.7	19.2	24.8	
FX6- 60P-0.8SV1(71)	576-0025-1-71	60	31.8	28.9	26.7	23.2	28.8	
FX6- 80P-0.8SV1(71)	576-0027-7-71	80	39.8	36.9	34.7	31.2	36.8	
FX6-100P-0.8SV1(71)	576-0028-0-71	100	47.8	44.9	42.7	39.2	44.8	

Note:Determine a quantity of the stick package product for delivery, multiplying the insertion pieces per contact number by an integer.
Make sure that a quantity of the stick package product for delivery is determined per reel (1000 pieces).
(Refer to the delivery form item on page A144 for details.)

Apr.1.2024 Copyright 2024 HIROSE ELECTRIC CO., LTD. All Rights Reserved.

With Boss Type

■Header-Stacking Height: Standard+2mm type

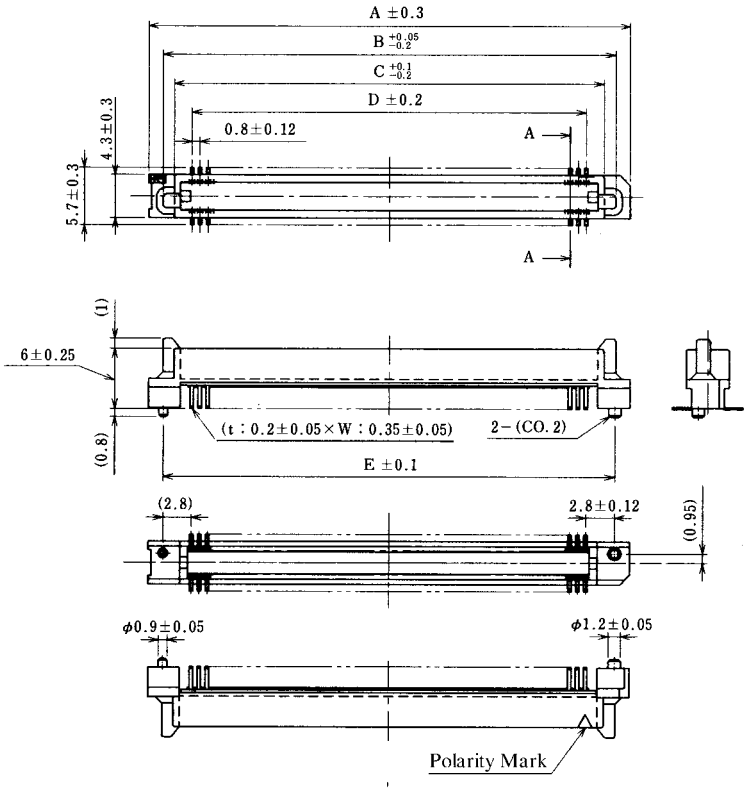

◆PCB mounting pattern

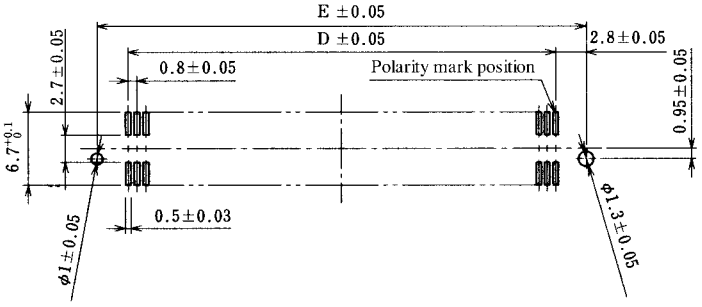

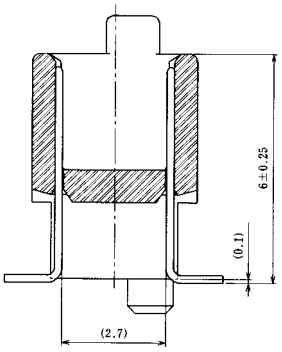

Unit: mm

Part Number	CL No.	Number of Contacts	A	B	C	D	E	RoHS
FX6- 20P-0.8SV2(71)	576-0041-8-71	20	15.8	12.9	10.7	7.2	12.8	YES
FX6- 40P-0.8SV2(71)	576-0043-3-71	40	23.8	20.9	18.7	15.2	20.8	
FX6- 50P-0.8SV2(71)	576-0044-6-71	50	27.8	24.9	22.7	19.2	24.8	
FX6- 60P-0.8SV2(71)	576-0045-9-71	60	31.8	28.9	26.7	23.2	28.8	
FX6- 80P-0.8SV2(71)	576-0047-4-71	80	39.8	36.9	34.7	31.2	36.8	
FX6-100P-0.8SV2(71)	576-0048-7-71	100	47.8	44.9	42.7	39.2	44.8	

Note:Determine a quantity of the stick package product for delivery, multiplying the insertion pieces per contact number by an integer.
Make sure that a quantity of the stick package product for delivery is determined per reel (1000 pieces).
(Refer to the delivery form item on page A144 for details.)

With Boss Type

■Receptacle-Stacking Height: Standard type

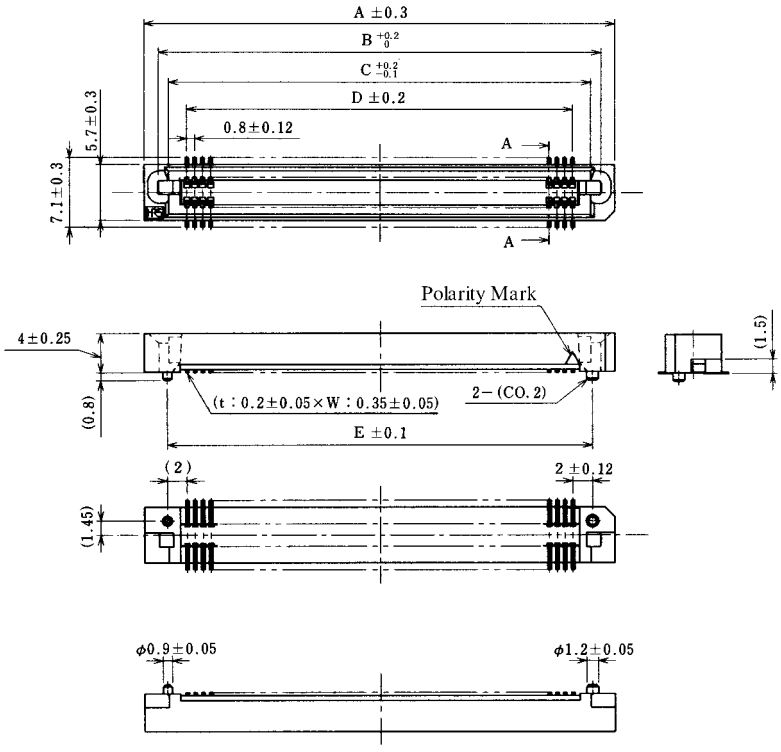

◆PCB mounting pattern

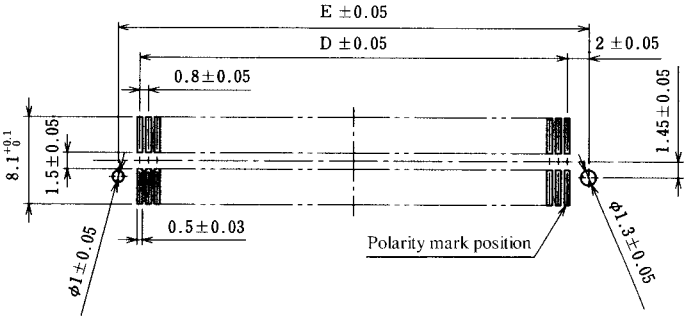

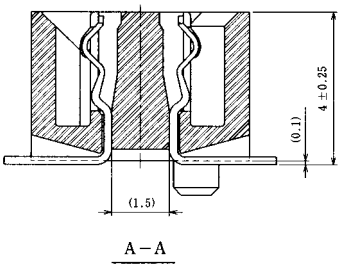

Unit: mm

Part Number	CL No.	Number of Contacts	A	B	C	D	E	RoHS
FX6- 20S-0.8SV(71)	576-0101-8-71	20	15.8	12.95	10.9	7.2	11.2	YES
FX6- 40S-0.8SV(71)	576-0103-3-71	40	23.8	20.95	18.9	15.2	19.2	
FX6- 50S-0.8SV(71)	576-0104-6-71	50	27.8	24.95	22.9	19.2	23.2	
FX6- 60S-0.8SV(71)	576-0105-9-71	60	31.8	28.95	26.9	23.2	27.2	
FX6- 80S-0.8SV(71)	576-0107-4-71	80	39.8	36.95	34.9	31.2	35.2	
FX6-100S-0.8SV(71)	576-0108-7-71	100	47.8	44.95	42.9	39.2	43.2	

Note:Determine a quantity of the stick package product for delivery, multiplying the insertion pieces per contact number by an integer.
Make sure that a quantity of the stick package product for delivery is determined per reel (1000 pieces).
(Refer to the delivery form item on page A144 for details.)

Apr.1.2024 Copyright 2024 HIROSE ELECTRIC CO., LTD. All Rights Reserved.

With Boss Type

■Receptacle-Stacking Height: Standard+2mm type

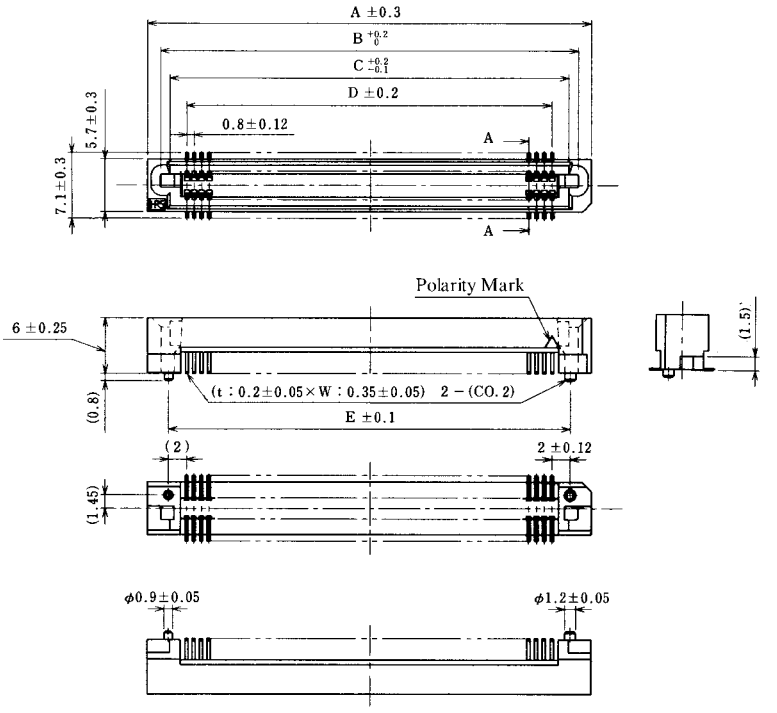

◆PCB mounting pattern

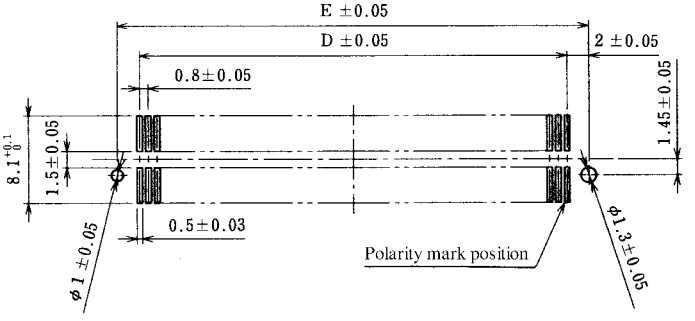

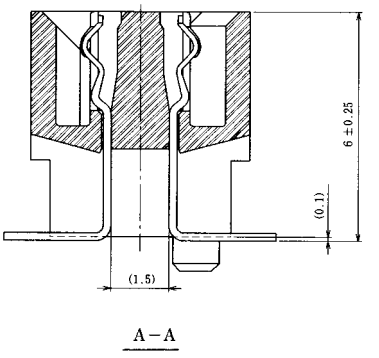

Unit: mm

Part Number	CL No.	Number of Contacts	A	B	C	D	E	RoHS
FX6- 20S-0.8SV2(71)	576-0121-5-71	20	15.8	12.95	10.9	7.2	11.2	YES
FX6- 40S-0.8SV2(71)	576-0123-0-71	40	23.8	20.95	18.9	15.2	19.2	
FX6- 50S-0.8SV2(71)	576-0124-3-71	50	27.8	24.95	22.9	19.2	23.2	
FX6- 60S-0.8SV2(71)	576-0125-6-71	60	31.8	28.95	26.9	23.2	27.2	
FX6- 80S-0.8SV2(71)	576-0127-1-71	80	39.8	36.95	34.9	31.2	35.2	
FX6-100S-0.8SV2(71)	576-0128-4-71	100	47.8	44.95	42.9	39.2	43.2	

Note:Determine a quantity of the stick package product for delivery, multiplying the insertion pieces per contact number by an integer.
Make sure that a quantity of the stick package product for delivery is determined per reel (1000 pieces).
(Refer to the delivery form item on page A144 for details.)

Apr.1.2024 Copyright 2024 HIROSE ELECTRIC CO., LTD. All Rights Reserved.

Without Boss Type

■Header-Stacking Height: Standard type

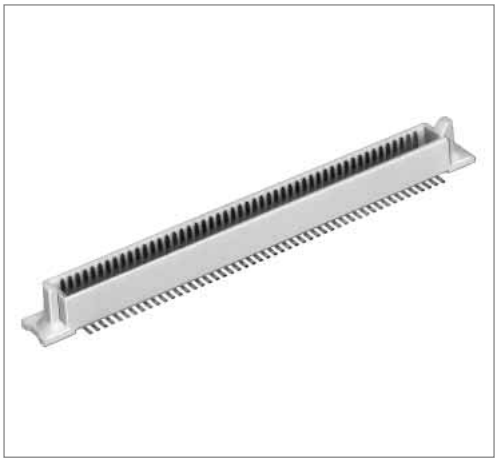

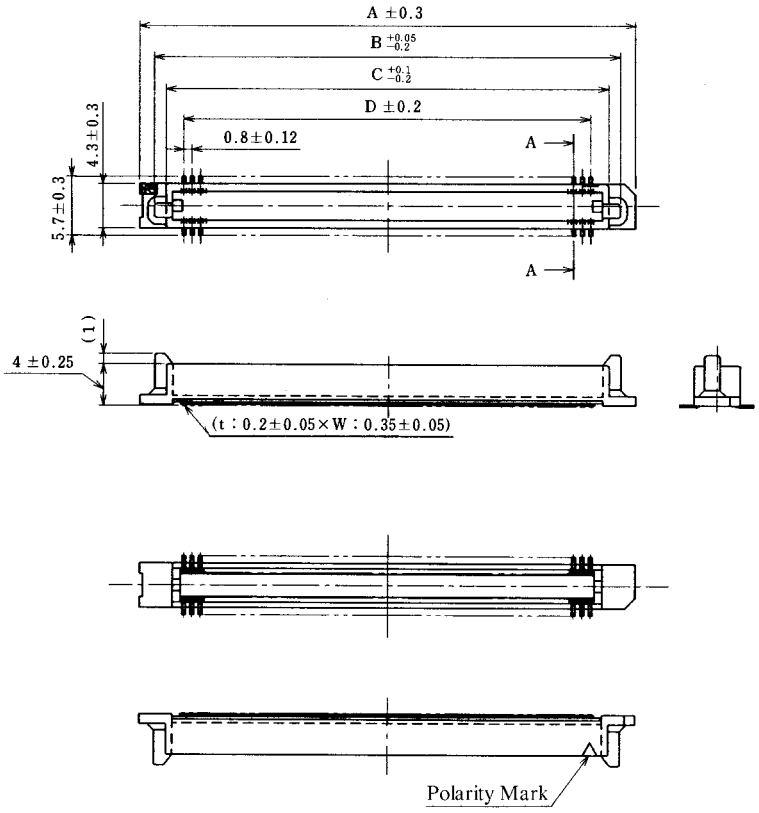

◆PCB mounting pattern

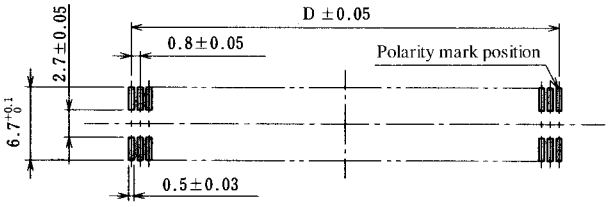

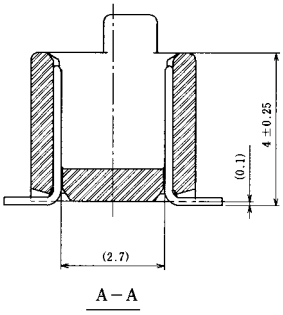

Unit: mm

Part Number	CL No.	Number of Contacts	A	B	C	D	RoHS
FX6A- 20P-0.8SV(71)	576-0201-2-71	20	15.8	12.9	10.7	7.2	YES
FX6A- 40P-0.8SV(71)	576-0203-8-71	40	23.8	20.9	18.7	15.2	
FX6A- 50P-0.8SV(71)	576-0204-0-71	50	27.8	24.9	22.7	19.2	
FX6A- 60P-0.8SV(71)	576-0205-3-71	60	31.8	28.9	26.7	23.2	
FX6A- 80P-0.8SV(71)	576-0207-9-71	80	39.8	36.9	34.7	31.2	
FX6A-100P-0.8SV(71)	576-0208-1-71	100	47.8	44.9	42.7	39.2	

Note:Determine a quantity of the stick package product for delivery, multiplying the insertion pieces per contact number by an integer. Please make sure that a quantity of the stick package product for delivery is determined per reel (1000 pieces). (Refer to the delivery form item on page A144 for details.)

Apr.1.2024 Copyright 2024 HIROSE ELECTRIC CO., LTD. All Rights Reserved.

Apr.1.2024 Copyright 2024 HIROSE ELECTRIC CO., LTD. All Rights Reserved.

Without Boss Type

■Header-Stacking Height: Standard+1 type

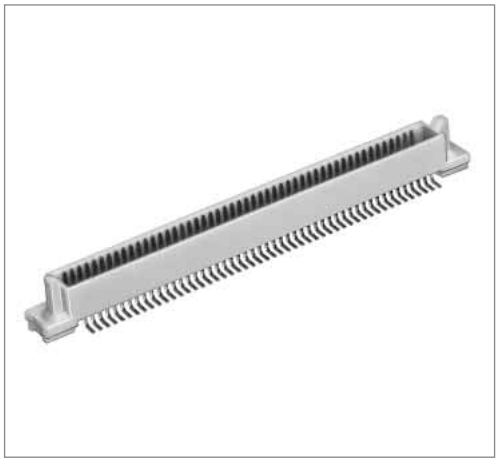

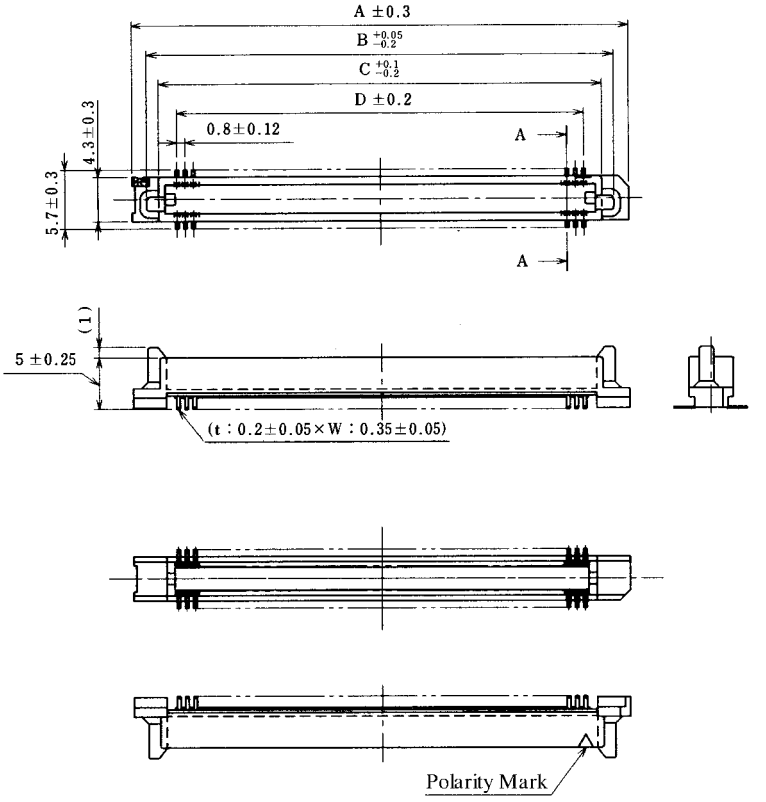

◆PCB mounting pattern

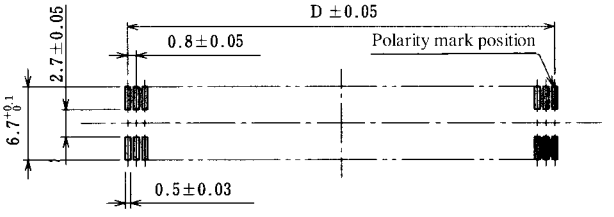

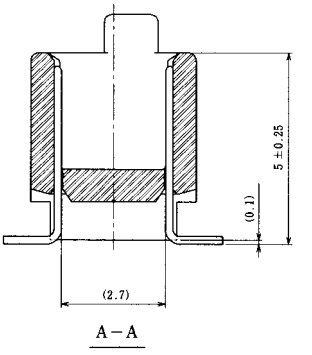

Unit: mm

Part Number	CL No.	Number of Contacts	A	B	C	D	RoHS
FX6A- 20P-0.8SV1(71)	576-0221-0-71	20	15.8	12.9	10.7	7.2	YES
FX6A- 40P-0.8SV1(71)	576-0223-5-71	40	23.8	20.9	18.7	15.2	
FX6A- 50P-0.8SV1(71)	576-0224-8-71	50	27.8	24.9	22.7	19.2	
FX6A- 60P-0.8SV1(71)	576-0225-0-71	60	31.8	28.9	26.7	23.2	
FX6A- 80P-0.8SV1(71)	576-0227-6-71	80	39.8	36.9	34.7	31.2	
FX6A-100P-0.8SV1(71)	576-0228-9-71	100	47.8	44.9	42.7	39.2	

Note:Determine a quantity of the stick package product for delivery, multiplying the insertion pieces per contact number by an integer. Please make sure that a quantity of the stick package product for delivery is determined per reel (1000 pieces). (Refer to the delivery form item on page A144 for details.)

Without Boss Type

■Receptacle-Stacking Height: Standard+2mm type

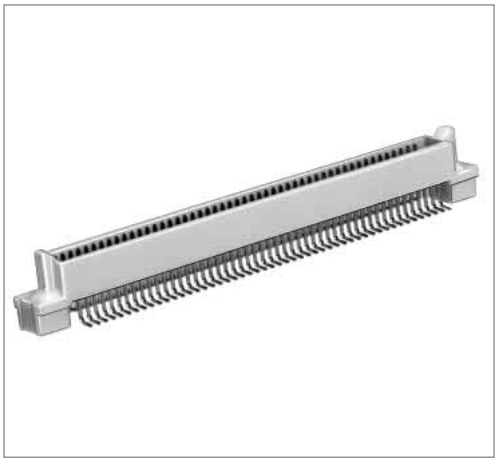

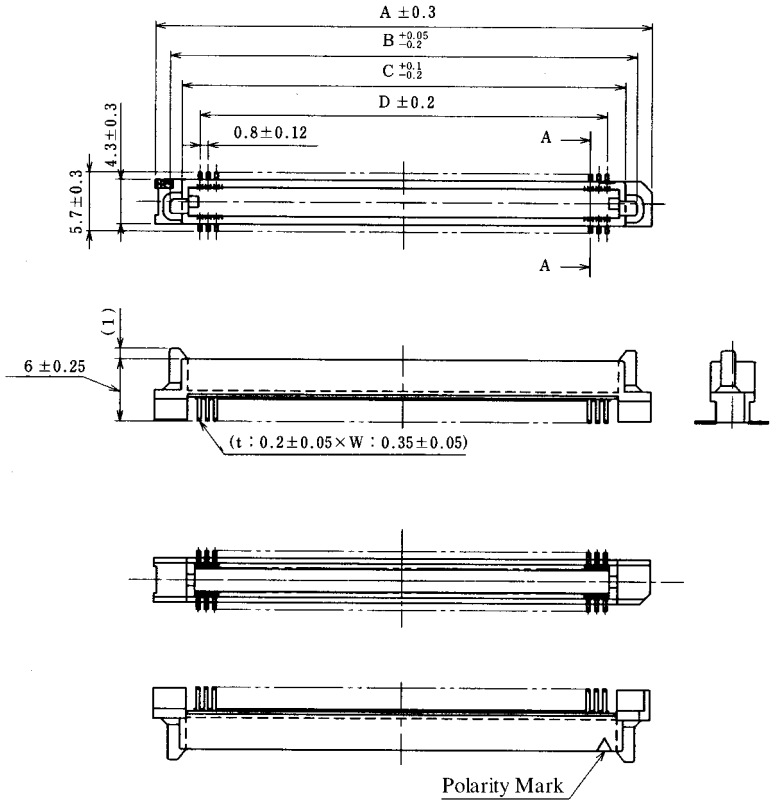

◆PCB mounting pattern

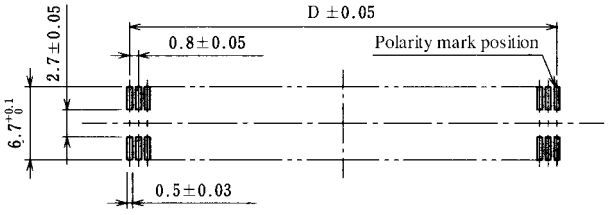

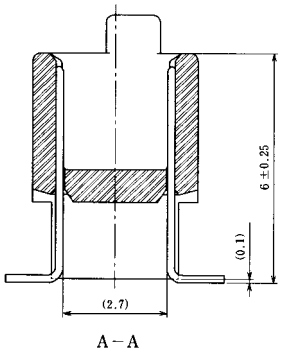

Unit: mm

Part Number	CL No.	Number of Contacts	A	B	C	D	RoHS
FX6A- 20P-0.8SV2(71)	576-0241-7-71	20	15.8	12.9	10.7	7.2	YES
FX6A- 40P-0.8SV2(71)	576-0243-2-71	40	23.8	20.9	18.7	15.2	
FX6A- 50P-0.8SV2(71)	576-0244-5-71	50	27.8	24.9	22.7	19.2	
FX6A- 60P-0.8SV2(71)	576-0245-8-71	60	31.8	28.9	26.7	23.2	
FX6A- 80P-0.8SV2(71)	576-0247-3-71	80	39.8	36.9	34.7	31.2	
FX6A-100P-0.8SV2(71)	576-0248-6-71	100	47.8	44.9	42.7	39.2	

Note:Determine a quantity of the stick package product for delivery, multiplying the insertion pieces per contact number by an integer. Please make sure that a quantity of the stick package product for delivery is determined per reel (1000 pieces). (Refer to the delivery form item on page A144 for details.)

Apr.1.2024 Copyright 2024 HIROSE ELECTRIC CO., LTD. All Rights Reserved.

Without Boss Type

■Receptacle-Stacking Height: Standard type

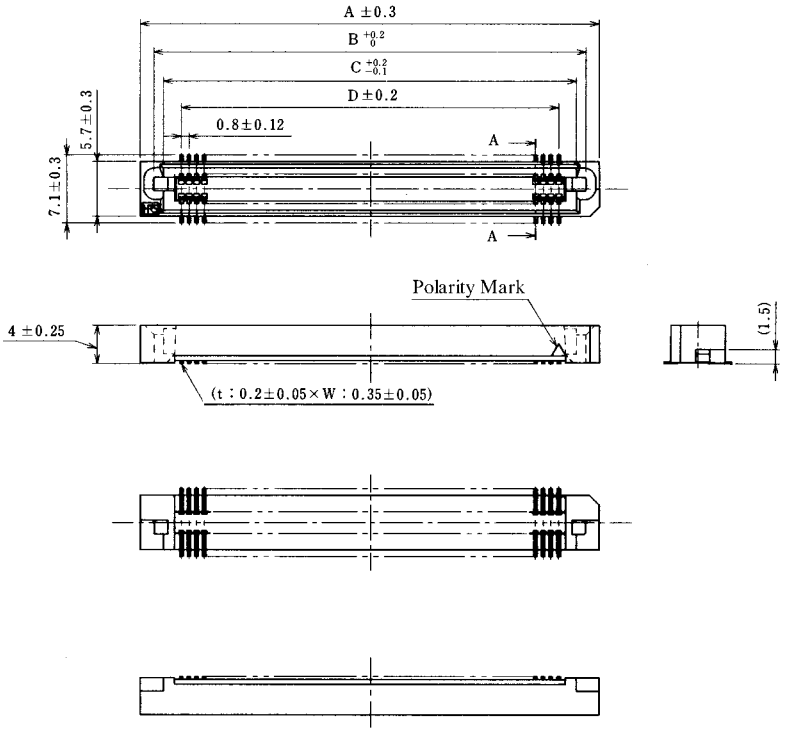

◆PCB mounting pattern

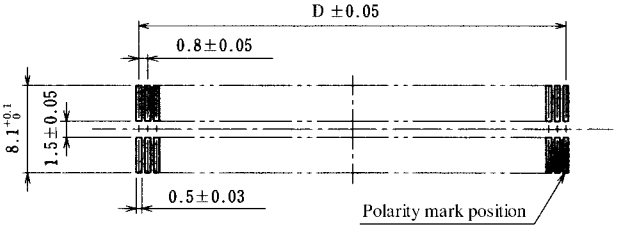

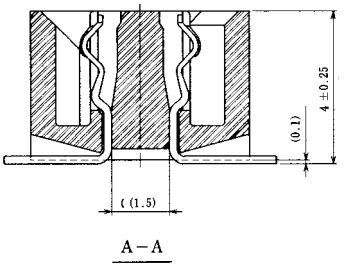

Unit: mm

Part Number	CL No.	Number of Contacts	A	B	C	D	RoHS
FX6A- 20S-0.8SV(71)	576-0301-7-71	20	15.8	12.95	10.9	7.2	YES
FX6A- 40S-0.8SV(71)	576-0303-2-71	40	23.8	20.95	18.9	15.2	
FX6A- 50S-0.8SV(71)	576-0304-5-71	50	27.8	24.95	22.9	19.2	
FX6A- 60S-0.8SV(71)	576-0305-8-71	60	31.8	28.95	26.9	23.2	
FX6A- 80S-0.8SV(71)	576-0307-3-71	80	39.8	36.95	34.9	31.2	
FX6A-100S-0.8SV(71)	576-0308-6-71	100	47.8	44.95	42.9	39.2	

Note:Determine a quantity of the stick package product for delivery, multiplying the insertion pieces per contact number by an integer. Please make sure that a quantity of the stick package product for delivery is determined per reel (1000 pieces). (Refer to the delivery form item on page A144 for details.)

Apr.1.2024 Copyright 2024 HIROSE ELECTRIC CO., LTD. All Rights Reserved.

Without Boss Type

■Receptacle-Stacking Height: Standard+2mm type

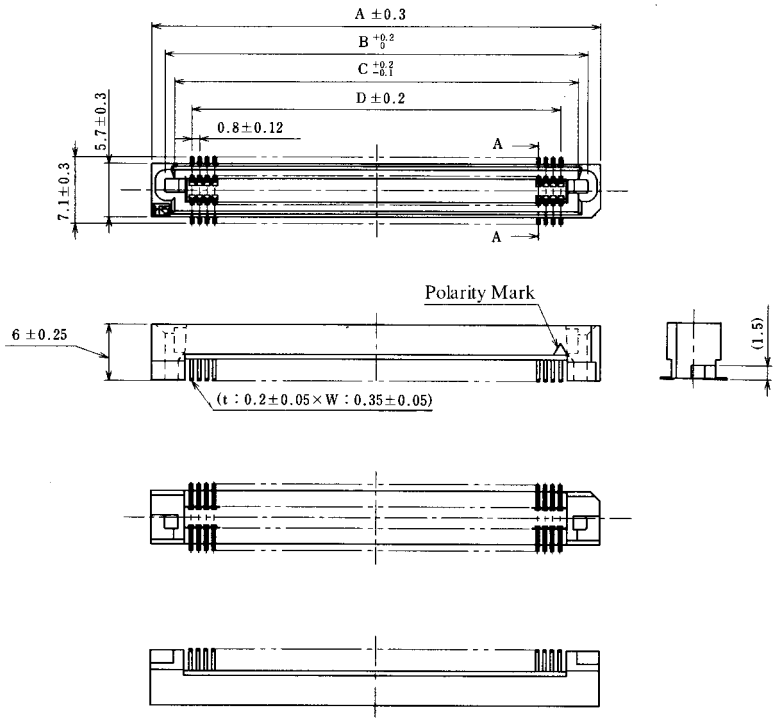

◆PCB mounting pattern

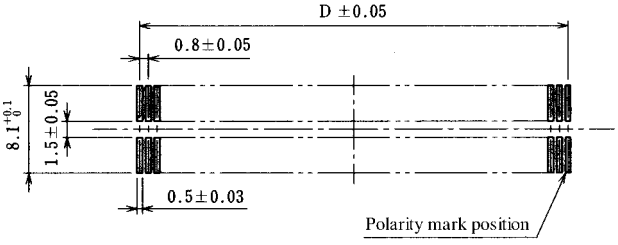

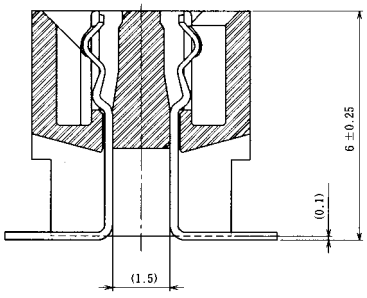

Unit: mm

Part Number	CL No.	Number of Contacts	A	B	C	D	RoHS
FX6A- 20S-0.8SV2(71)	576-0321-4-71	20	15.8	12.95	10.9	7.2	YES
FX6A- 40S-0.8SV2(71)	576-0323-0-71	40	23.8	20.95	18.9	15.2	
FX6A- 50S-0.8SV2(71)	576-0324-2-71	50	27.8	24.95	22.9	19.2	
FX6A- 60S-0.8SV2(71)	576-0325-5-71	60	31.8	28.95	26.9	23.2	
FX6A- 80S-0.8SV2(71)	576-0327-0-71	80	39.8	36.95	34.9	31.2	
FX6A-100S-0.8SV2(71)	576-0328-3-71	100	47.8	44.95	42.9	39.2	

Note:Determine a quantity of the stick package product for delivery, multiplying the insertion pieces per contact number by an integer. Please make sure that a quantity of the stick package product for delivery is determined per reel (1000 pieces). (Refer to the delivery form item on page A144 for details.)

Apr.1.2024 Copyright 2024 HIROSE ELECTRIC CO., LTD. All Rights Reserved.

◆Precautions

1. Tolerance Clearance on Mating Side

The effective contact length of the product is set to 1.7mm. Please use the products as to set the clearance within 1.0mm between the header and the receptacle in the mating process.

2. Mounting Temperature Profile (Reference)

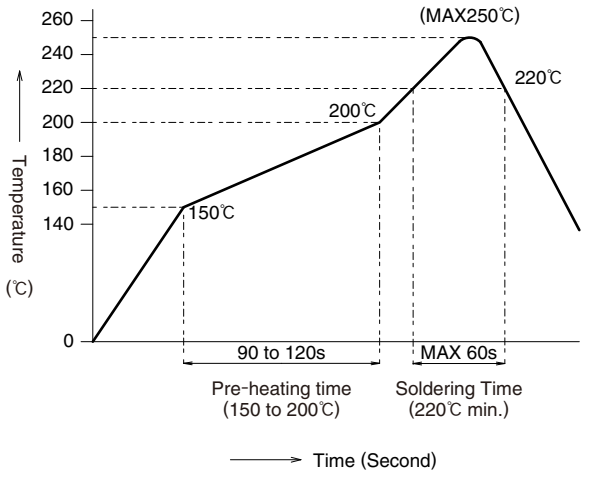

HRS test conditions

Test board	Glass epoxy 110mm×55mm×1.6mm thick
Solder method	:Reflow
Solder composition	:Paste, 96.5%Sn/3%Ag/0.5%Cu
Metal mask	: 0.15mm thick
Reflow cycles	: 2 cycles

The temperature profile is based on the above conditions.
In individual applications the actual temperature may vary, depending on solder paste type, volume/thickness and board size/thickness. Consult your solder paste and equipment manufacturer for specific recommendations.

3. Board to Board Size

The board to board size of the male/female connector shown in the application pattern doesn't include the solder paste thickness. Thus, after the connector is mounted on the board, consider that the board to board size will be widened in proportion to the solder paste thickness.

Apr.1.2024 Copyright 2024 HIROSE ELECTRIC CO., LTD. All Rights Reserved.

Mouser Electronics

Authorized Distributor

Click to View Pricing, Inventory, Delivery & Lifecycle Information:

Hirose Electric:

FX6-20P-0.8SV(71) FX6-20P-0.8SV(92) FX6-20P-0.8SV(93) FX6-40P-0.8SV(71) FX6-50P-0.8SV(71) FX6-60P-0.8SV(71) FX6-80P-0.8SV(71) FX6-100P-0.8SV(71) FX6-100P-0.8SV(91) FX6-20P-0.8SV1(71) FX6-20P-0.8SV1(93) FX6-40P-0.8SV1(71) FX6-50P-0.8SV1(71) FX6-80P-0.8SV1(71) FX6-20P-0.8SV2(71) FX6-40P-0.8SV2(71) FX6-40P-0.8SV2(91) FX6-50P-0.8SV2(71) FX6-60P-0.8SV2(71) FX6-80P-0.8SV2(71) FX6-100P-0.8SV2(71) FX6-20S-0.8SV(71) FX6-20S-0.8SV(93) FX6-40S-0.8SV(71) FX6-40S-0.8SV(93) FX6-50S-0.8SV(71) FX6-60S-0.8SV(71) FX6-60S-0.8SV(93) FX6-80S-0.8SV(71) FX6-100S-0.8SV(71) FX6-20S-0.8SV2(71) FX6-20S-0.8SV2(93) FX6-40S-0.8SV2(71) FX6-50S-0.8SV2(71) FX6-60S-0.8SV2(71) FX6-80S-0.8SV2(71) FX6-100S-0.8SV2(71) FX6-100S-0.8SV2(91) FX6A-20P-0.8SV(71) FX6A-40P-0.8SV(71) FX6A-80P-0.8SV(71) FX6A-40P-0.8SV2(71) FX6A-20S-0.8SV(71) FX6A-40S-0.8SV2(71) FX6A-50S-0.8SV2(71) FX6A-80S-0.8SV2(71) FX6A-80S-0.8SV2(91)