Aug.1.2021 Copyright 2021 HIROSE ELECTRIC CO., LTD. All Rights Reserved.
In case of consideration for using Automotive equipment / device which demand high reliability, kindly contact our sales window correspondents.

	COUNT	DESCRIPTION OF REVISIONS	BY	CHKD	DATE		COUNT	DESCRIPTION OF REVISIONS	BY	CHKD	DATE
△					. .	△					. .
△					. .	△					. .
△					. .	△					. .

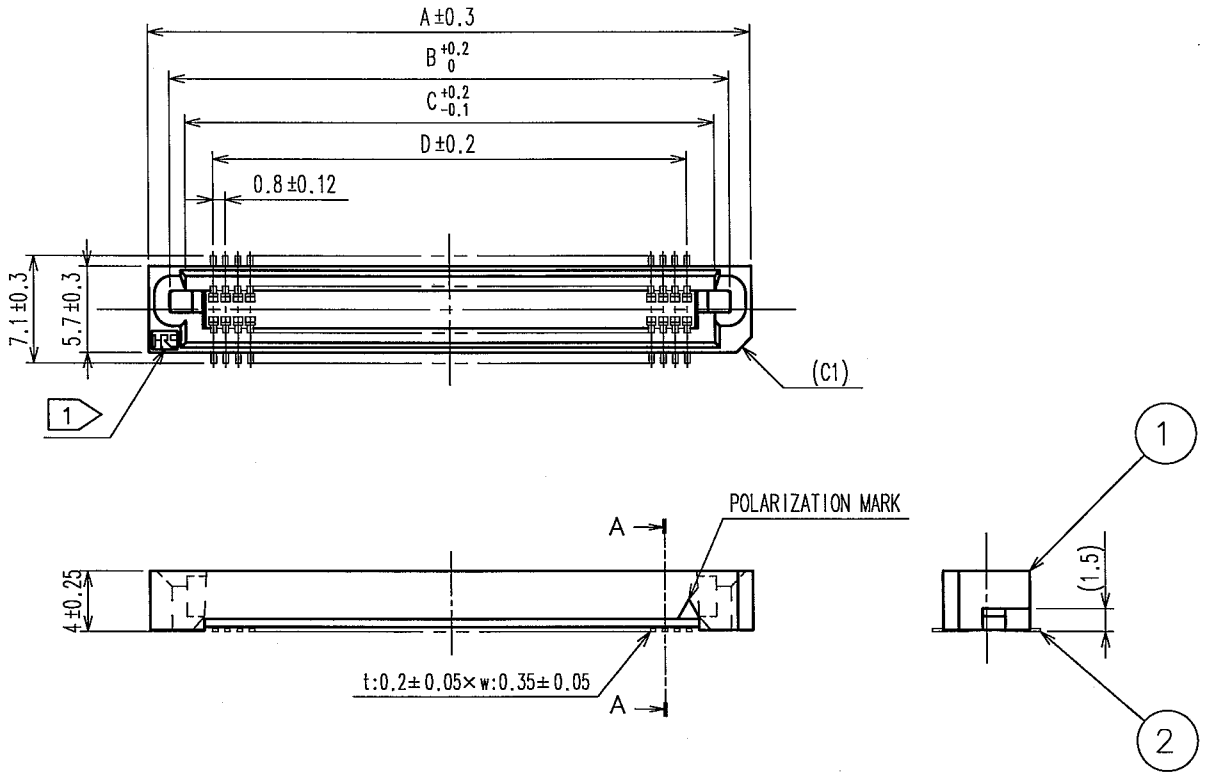

A-A(10:1)

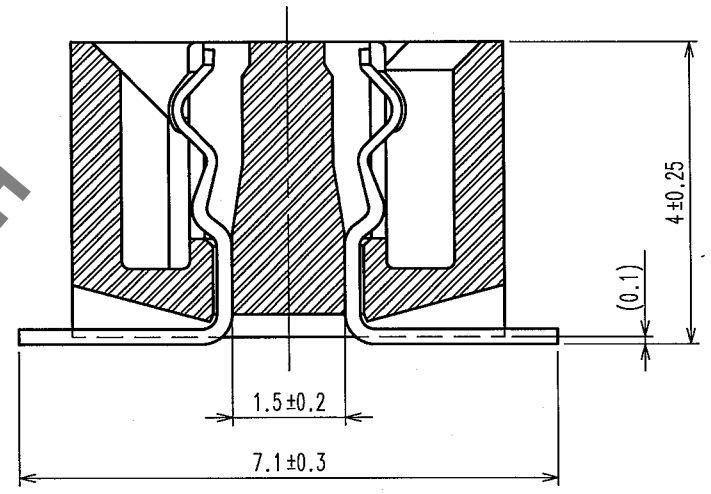

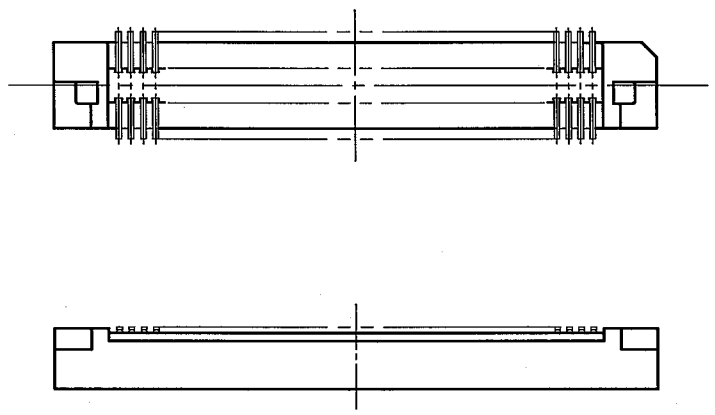

RECOMMENDED P.C.B. LAND PATTERN
(MOUNT SIDE)

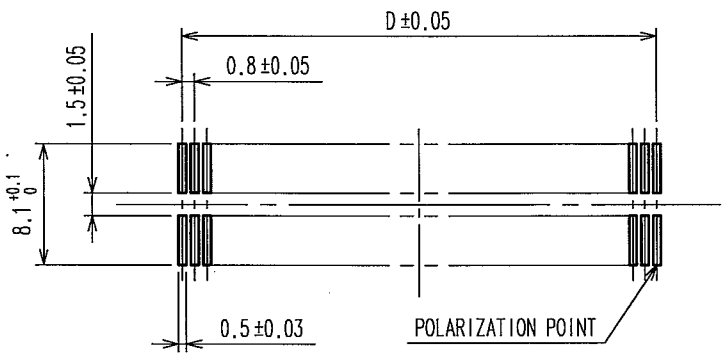

DIMENSION TABEL OF CONNECTOR AND P.C.B. LAND PATTERN

PART No.	CODE No.	6	A	B	C	D
FX6A- 20S-0.8SV(93)	CL576-0301-7-93	20	15.8	12.95	10.9	7.2
FX6A- 40S-0.8SV(93)	CL576-0303-2-93	40	23.8	20.95	18.9	15.2
FX6A- 50S-0.8SV(93)	CL576-0304-5-93	50	27.8	24.95	22.9	19.2
FX6A- 60S-0.8SV(93)	CL576-0305-8-93	60	31.8	28.95	26.9	23.2
FX6A- 80S-0.8SV(93)	CL576-0307-3-93	80	39.8	36.95	34.9	31.2

NOTE
1 HRS MARK SHALL BE OPTIONAL.
2 LEAD CO-PLANARITY SHALL BE 0.1 MAX.
3 EMBOSSED CARRIER TAPE PACKAGING SHALL BE APPLIED FOR THIS PRODUCT.
4 THIS PRODUCT HAS TAPE FOR VACUUM PICKUP.
SEE NEXT PAGE FOR DETAIL OF STICKING POSITION,ETC.
5 FOR MODIFICATION,ETC,PREVENTIVE HOLE FOR SINK MARK MAY BE ADDED ACCORDING TO CIRCUMSTANCES.
6 NUMBER OF CONTACTS.
7 THE DIMENSIONS IN PARENTHESES ARE FOR REFERENCE.

NO.	MATERIAL	FINISH, REMARKS
1	POLYPHENYLENE SULFIDE	LIGHT BROWN (UL94V-0)
2	PHOSPHOR BRONZE	CONTACT AREA:GOLD 0.1μm min. LEAD AREA:TIN-PLATING 1μm min. UNDER PLATING:NICKLE 2μm min.

CODE NO.(OLD)	DRAWN	DESIGNED	CHECKED	APPROVED	RELEASED
	T.YANAGISAWA '05.08.04	J.Noda '05.8.5	K.Ozawa '05.08.05	H.Okawa 05.08.05	. .

SCALE FREE	DRAWING NO. EDC3-152949-23	PART NO. FX6A-*S-0.8SV(93)
UNITS mm	HRS HIROSE ELECTRIC CO., LTD	CODE NO. CL576 1/2

TO
PCK

HRS DRAWING FOR REFERENCE

FORM NO.229

Aug.1.2021 Copyright 2021 HIROSE ELECTRIC CO., LTD. All Rights Reserved.
In case of consideration for using Automotive equipment / device which demand high reliability, kindly contact our sales window correspondents.

	COUNT	DESCRIPTION OF REVISIONS	BY	CHKD	DATE		COUNT	DESCRIPTION OF REVISIONS	BY	CHKD	DATE
△					. .	△					. .
△					. .	△					. .
△					. .	△					. .

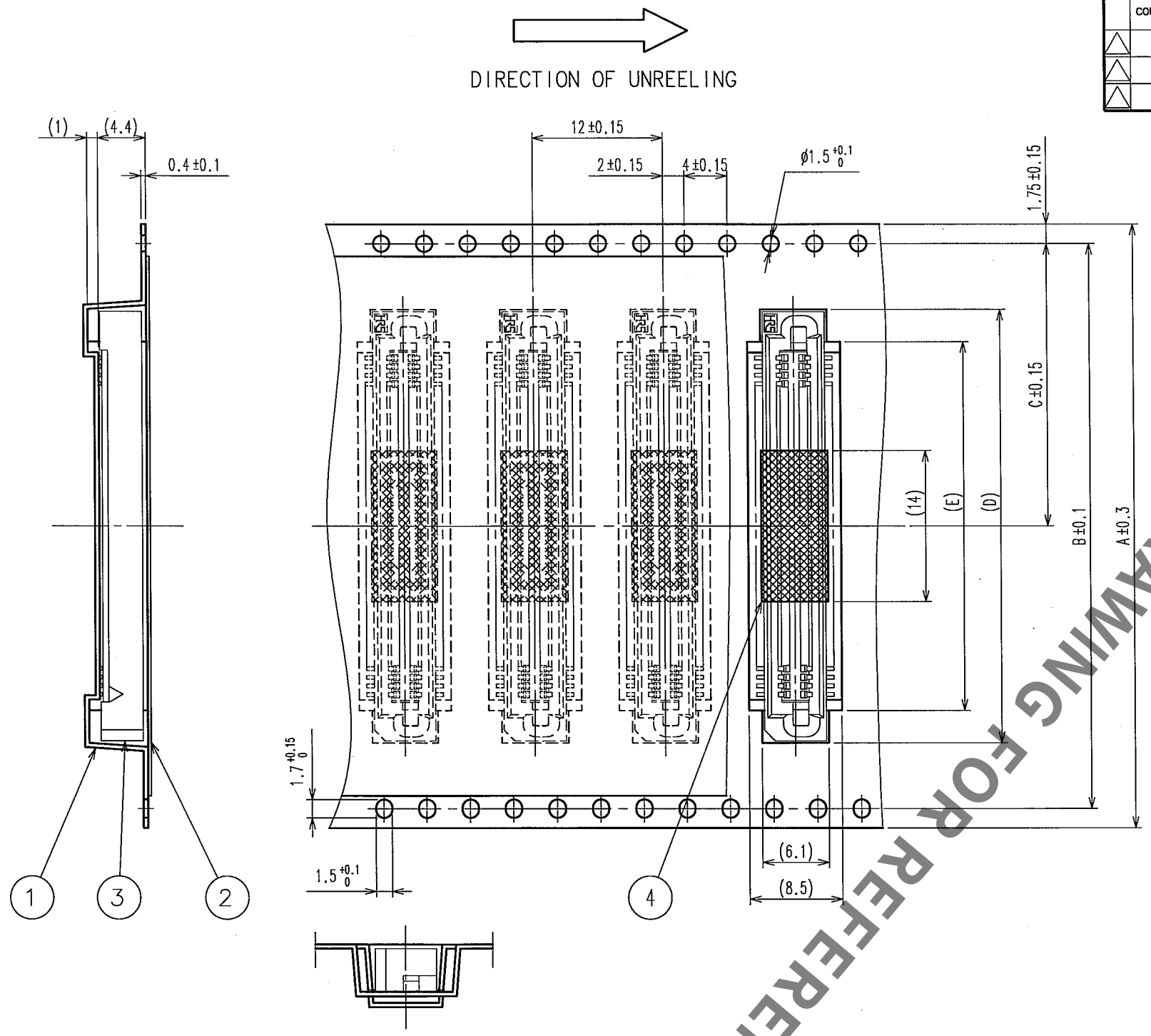

STYLE AMD DIMENSIONS OF REEL(FREE)

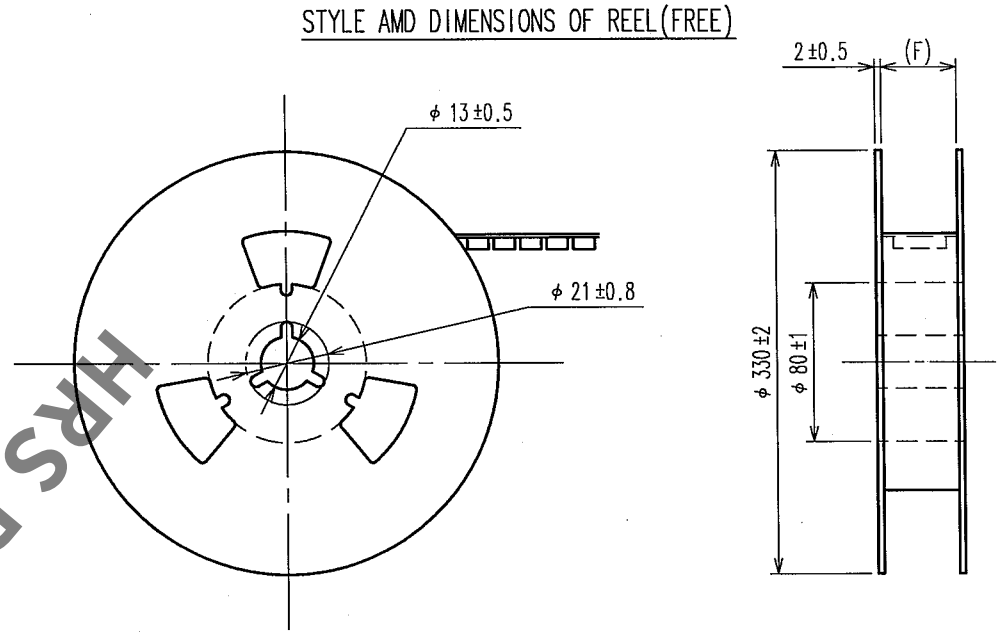

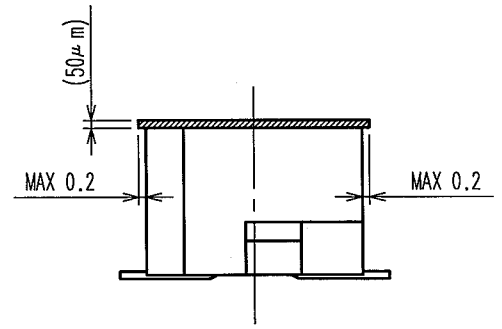

DETAIL OF TAPE FOR VACUUM PICK-UP(5:1)

DIMENSION TABLE OF EMBOSSED CARRIER TAPE AND REEL.

PARE No.	CODE No.	3	A	B	C	D	E	F
FX6A- 20S-0.8SV(93)	CL576-0301-7-93	20	24.0	–	11.5	16.2	10.2	24.4
FX6A- 40S-0.8SV(93)	CL576-0303-2-93	40	44.0	40.4	20.2	24.2	18.2	44.4
FX6A- 50S-0.8SV(93)	CL576-0304-5-93	50	44.0	40.4	20.2	28.2	20.2	44.4
FX6A- 60S-0.8SV(93)	CL576-0305-8-93	60	44.0	40.4	20.2	32.2	26.2	44.4
FX6A- 80S-0.8SV(93)	CL576-0307-3-93	80	56.0	52.4	26.2	40.2	34.2	58.0

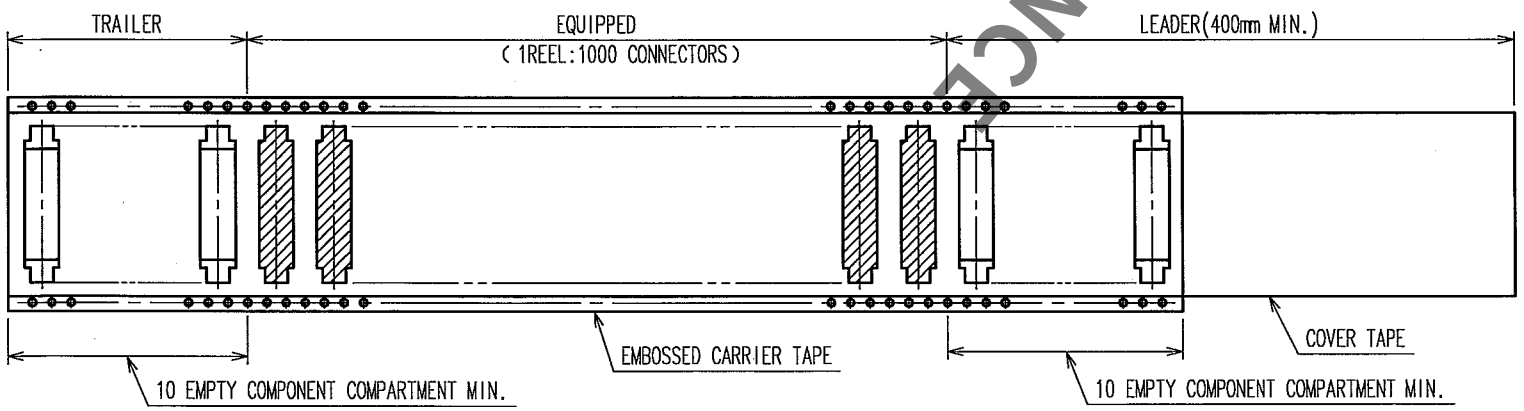

NOTE 1 THE DIMENSIONS IN PARENTHESES ARE FOR REFERENCE.
2 1REEL : 1000 CONNECTORS.
3 NUMBER OF CONTACTS.

NO.	MATERIAL	FINISH, REMARKS	NO.	MATERIAL	FINISH, REMARKS
2	POLYESTER	COVER TAPE	4	POLYIMIDE	TAPE FOR VACUUM PICK-UP
1	POLYSTYRENE	EMBOSSED CARRIER TAPE	3		(CONNECTOR)

CODE NO.(OLD)	DRAWN	DESIGNED	CHECKED	APPROVED	RELEASED
	T.YANAGISAWA '05.08.04	T. Noda '05.8.5	K.C. Ogawa '05.08.05	H. Okawa 05-08-05	. .

SCALE FREE	DRAWING NO. EDC3-152949-23	PART NO. FX6A-*S-0.8SV(93)
UNITS mm	HRS HIROSE ELECTRIC CO., LTD	CODE NO. CL576 2/

TO
PCK

HRS DRAWING FOR REFERENCE

FORM NO.229

Mouser Electronics

Authorized Distributor

Click to View Pricing, Inventory, Delivery & Lifecycle Information:

Hirose Electric:

FX6A-60S-0.8SV(93)