Aug.1.2021 Copyright 2021 HIROSE ELECTRIC CO., LTD. All Rights Reserved.
In case of consideration for using Automotive equipment / device which demand high reliability, kindly contact our sales window correspondents.

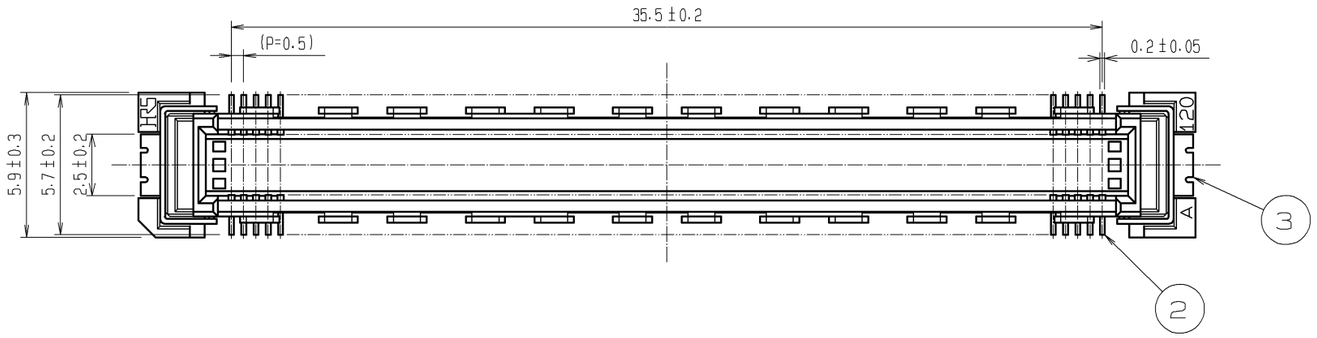

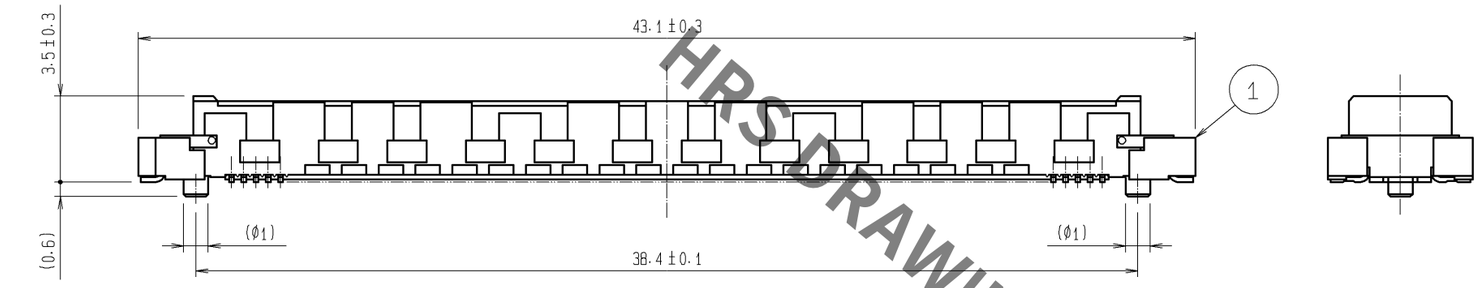

CROSS CUT SECTION (10:1)

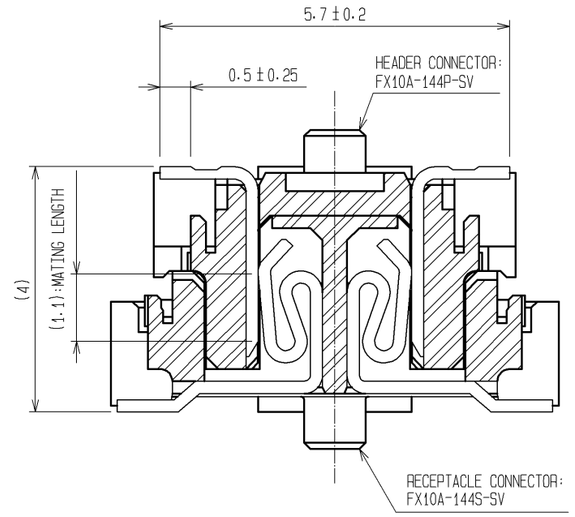

RECOMMENDED LAND PATTERN DIMENSION OF PCB
(RECOMMENDED METAL MASK THICKNESS:0.15mm)

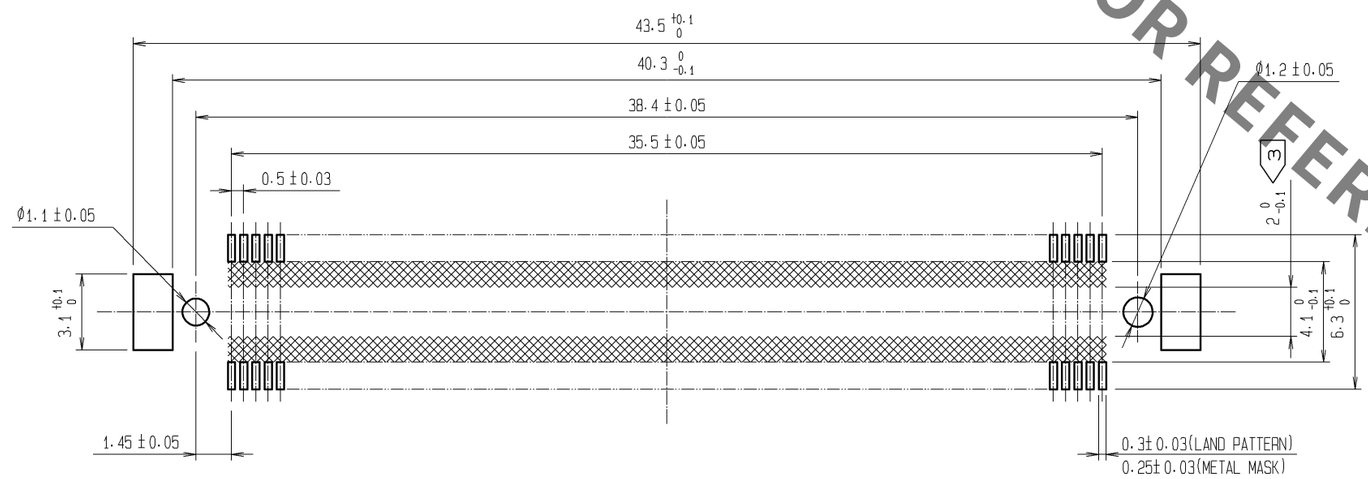

HRS DRAWING FOR REFERENCE

NOTES
1. SMT LEAD-COPLANARITY:0.1 MAX.
2. THIS PRODUCT HAS NO POLARITY TO PATTERN FOR MOUNTING.
3. MAKE SURE WIDTH OF PATTERN IS WITHIN THAT OF LAND, OR LEAD MAY TOUCH PATTERN.(THIS APPLIES TO HATCHED ▨ AREA.)
4. EMBOSS CARRIER TAPE PACKAGE IS APPLIED ON THIS PRODUCT. PLEASE REFER TO THE SHEET 2/2 FOR THE DETAILS.
5. THE DIMENSIONS IN PARENTHESES ARE FOR REFERENCE.

NO.	MATERIAL	FINISH, REMARKS	NO.	MATERIAL	FINISH, REMARKS
3	PHOSPHOR BRONZE	TIN-PLATING			
2	PHOSPHOR BRONZE	CONTACT AREA:GOLD 0.1μm min. LEAD AREA :TIN-PLATING 1μm min. UNDER PLATING : NICKEL 1μm min.	5	POLYESTER	TOP COVER TAPE
1	LCP	BEIGE UL94V-0	4	POLYSTYRENE	EMBOSSED CARRIER TAPE

UNITS	SCALE	COUNT	DESCRIPTION OF REVISIONS	DESIGNED	CHECKED	DATE
mm	4 : 1					

HRS HIROSE ELECTRIC CO., LTD.

APPROVED	HT. YAMAGUCHI	10.07.29	DRAWING NO.	EDC3-151954-21
CHECED	HT. YAMAGUCHI	10.07.29	PART NO.	FX10A-144P-SV(91)
DESIGNED	SY. KAMIGA	10.07.29	CODE NO.	CL570-0043-5-91
DRAWN	HK. SUNADORI	10.07.28		1/2

Aug.1.2021 Copyright 2021 HIROSE ELECTRIC CO., LTD. All Rights Reserved.
In case of consideration for using Automotive equipment / device which demand high reliability, kindly contact our sales window correspondents.

DRAWING FOR PACKING(2:1)

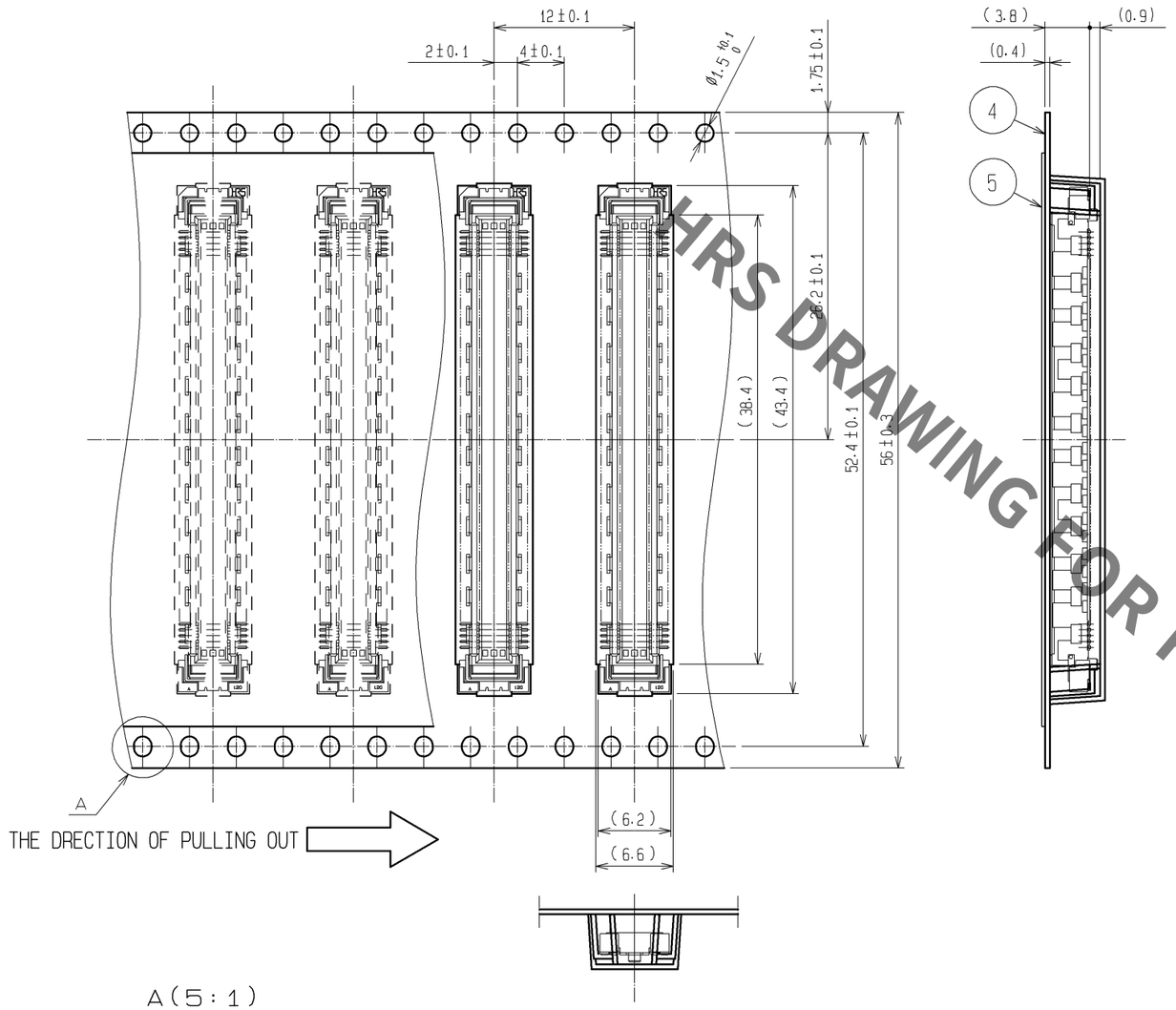

A(5:1)

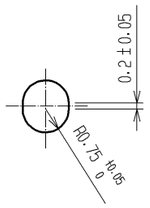

REELED DIMENSION(Free)

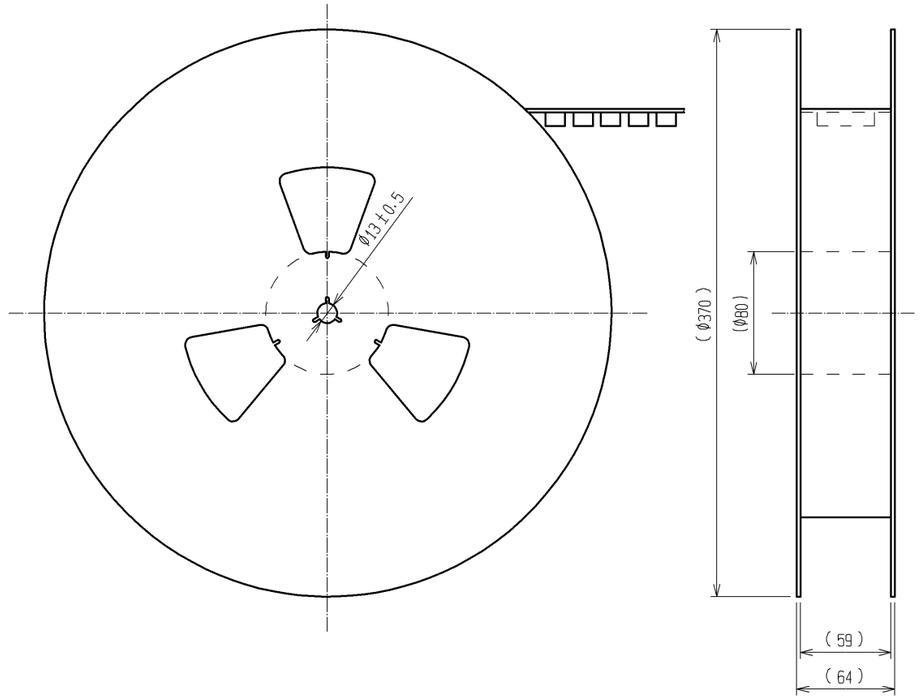

HRS DRAWING FOR REFERENCE

NOTES
1 1REEL:1000 CONNECTORS.
2 MINIMUM 10 COMPARTMENTS FROM BOTH REEL ENDS REMAIN EMPTY.
3 THIS PRODUCT HAS NO POLAVITY TO TAPE AND REEL PACKAGING.
4 THE DIMENSIONS IN PARENTHESES ARE FOR REFERENCE.

HRS	DRAWING NO.	EDC3-151954-21
	PART NO.	FX10A-144P-SV(91)
	CODE NO.	CL570-0043-5-91 △ 2/2

Mouser Electronics

Authorized Distributor

Click to View Pricing, Inventory, Delivery & Lifecycle Information:

Hirose Electric:

FX10A-144P-SV(91)