Sep.1.2021 Copyright 2021 HIROSE ELECTRIC CO., LTD. All Rights Reserved.
In case of consideration for using Automotive equipment / device which demand high reliability, kindly contact our sales window correspondents.

	COUNT	DESCRIPTION OF REVISIONS	BY	CHKD	DATE		COUNT	DESCRIPTION OF REVISIONS	BY	CHKD	DATE
△						△					
△						△					
△						△					

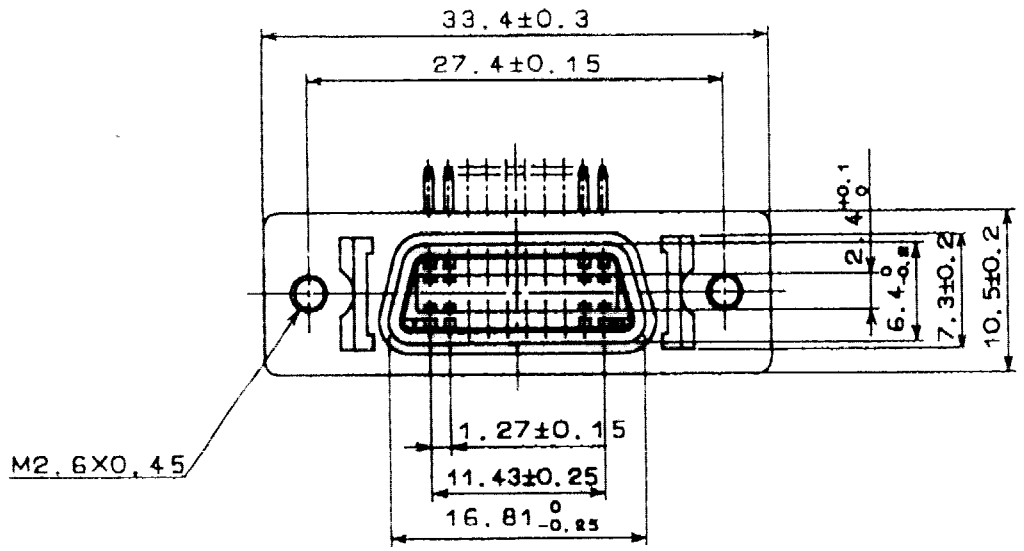

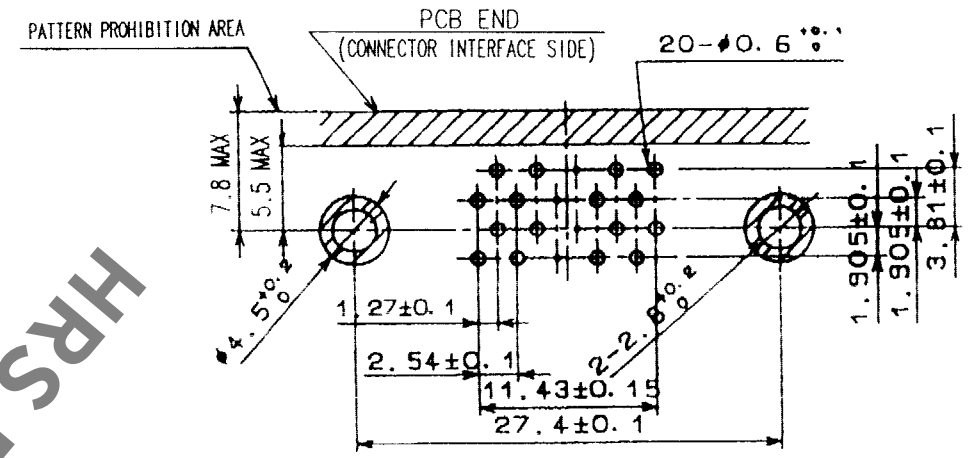

RECOMMENDED PC BOARD PATTERN

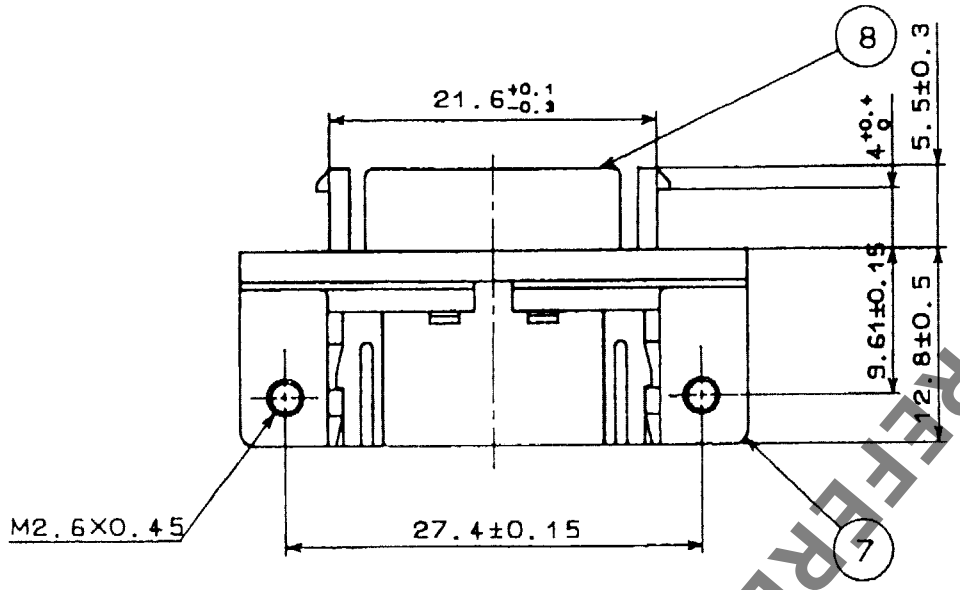

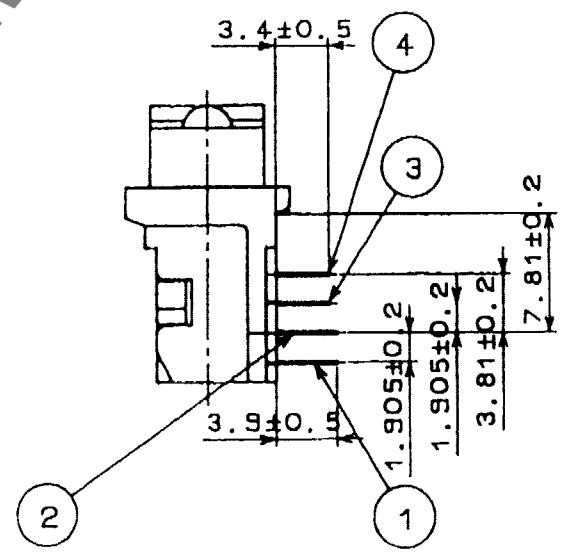

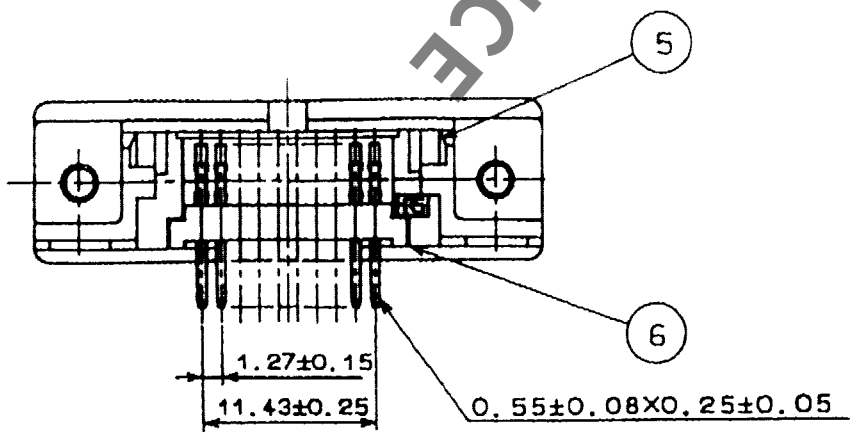

HRS DRAWING FOR REFERENCE

NO.	MATERIAL	FINISH, REMARKS	NO.	MATERIAL	FINISH, REMARKS
4	PHOSPHOR BRONZE	SELECTIVE GOLD PLATING 0.2μm	8	STEEL	NICKEL PLATING
3	PHOSPHOR BRONZE	SELECTIVE GOLD PLATING 0.2μm	7	ZINC ALLOY DIE CASTING	NICKEL PLATING
2	PHOSPHOR BRONZE	SELECTIVE GOLD PLATING 0.2μm	6	PBT	UL94V-0(BLACK)
1	PHOSPHOR BRONZE	SELECTIVE GOLD PLATING 0.2μm	5	PBT	UL94V-0(BLACK)

CODE NO.(OLD)	DRAWN	DESIGNED	CHECKED	APPROVED	RELEASED
CL	T.Hamaya 03.10.6	T.Hamaya 03.10.6	Y.Enami 03.10.07	H.Miura 03.10.08	. .

SCALE 2 : 1	DRAWING NO. EDC3-027307-01	PART NO. DX10-20S(50)
UNITS mm	HRS HIROSE ELECTRIC CO., LTD	CODE NO. CL230-0001-1-50

1/1

TO
Q

FORM NO.229

Mouser Electronics

Authorized Distributor

Click to View Pricing, Inventory, Delivery & Lifecycle Information:

Hirose Electric:

DX10-20S(50)