Sep.1.2021 Copyright 2021 HIROSE ELECTRIC CO., LTD. All Rights Reserved.
In case of consideration for using Automotive equipment / device which demand high reliability, kindly contact our sales window correspondents.

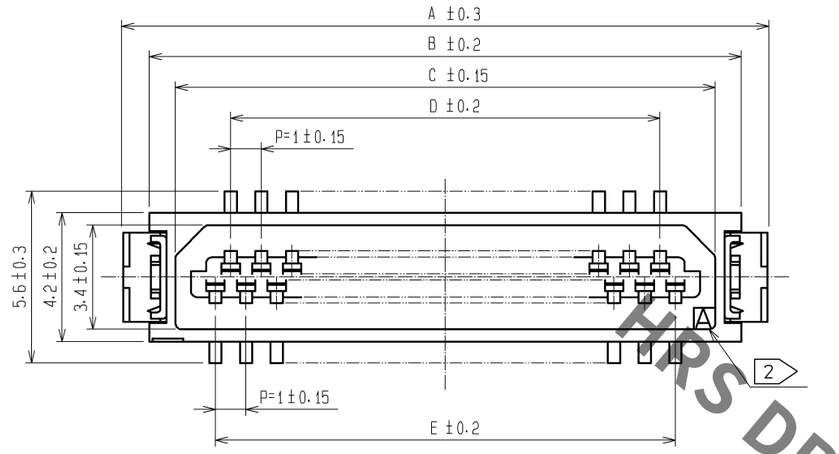


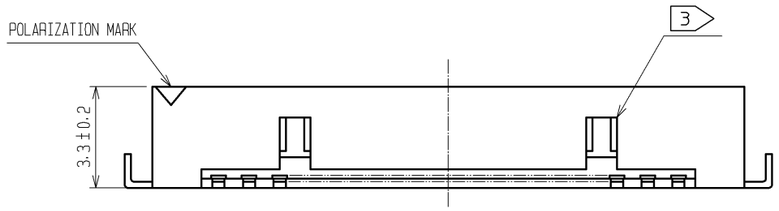


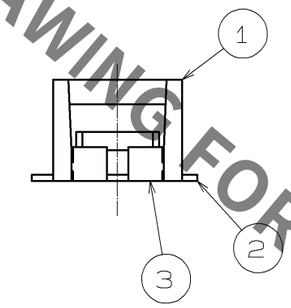


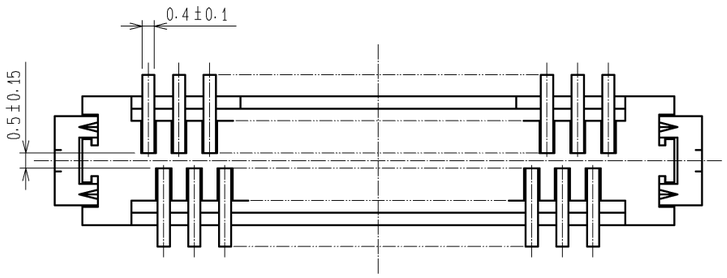


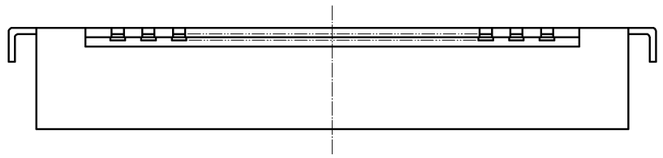

RECOMMENDED PATTERN

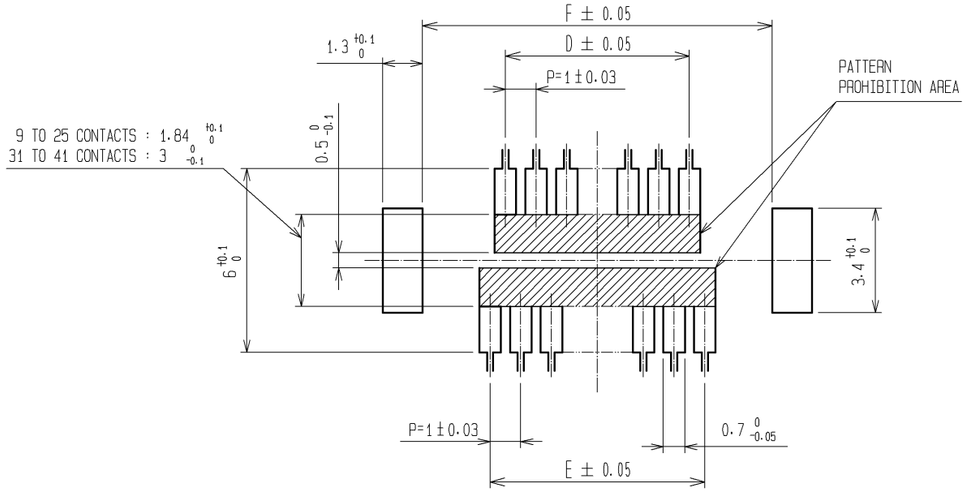


| PART No. | CODE No. | NUMBER OF CONTACTS | A | B | C | D | E | F |
|---|---|---|---|---|---|---|---|---|
| DF9B- 9P-1V(68) | - | 9 | 10.1 | 8.3 | 6.6 | 3 | 4 | 8.4 |
| DF9B-11P-1V(68) | - | 11 | 11.1 | 9.3 | 7.6 | 4 | 5 | 9.4 |
| DF9B-13P-1V(68) | - | 13 | 12.1 | 10.3 | 8.6 | 5 | 6 | 10.4 |
| DF9B-15P-1V(68) | - | 15 | 13.1 | 11.3 | 9.6 | 6 | 7 | 11.4 |
| DF9B-17P-1V(68) | - | 17 | 14.1 | 12.3 | 10.6 | 7 | 8 | 12.4 |
| DF9B-19P-1V(68) | - | 19 | 15.1 | 13.3 | 11.6 | 8 | 9 | 13.4 |
| DF9B-21P-1V(68) | - | 21 | 16.1 | 14.3 | 12.6 | 9 | 10 | 14.4 |
| DF9B-23P-1V(68) | - | 23 | 17.1 | 15.3 | 13.6 | 10 | 11 | 15.4 |
| DF9B-25P-1V(68) | CL540-0142-5-68 | 25 | 18.1 | 16.3 | 14.6 | 11 | 12 | 16.4 |
| DF9B-31P-1V(68) | - | 31 | 21.1 | 19.3 | 17.6 | 14 | 15 | 19.4 |
| DF9B-41P-1V(68) | CL540-0221-0-68 | 41 | 26.1 | 24.3 | 22.6 | 19 | 20 | 24.4 |

NOTES 1 : LEAD CO-PLANARITY INCLUDE REINFORCED METAL FITTINGS SHALL BE 0.1mm MAX.
2 CAV NO. IS INDICATED IN APPROX POSITION SHOWN.
3 9 TO 25 CONTACT CONNECTORS HAVE ONE LOCK AT CENTER OF HOUSING.
31 TO 41 CONTACT CONNECTORS HAVE TWO LOCKS AS PER DRAWING.

| NO. | MATERIAL | FINISH , REMARKS | NO. | MATERIAL | FINISH , REMARKS |
|---|---|---|---|---|---|
| 3 | BRASS | SURFACE:TIN PLATED(REFLOW FINISH)1μm min<br>UNDER PLATING:COPPER 0.3μm min | 8 | PS | CLEAR(REINFORCEMENT COLLAR) |
| 2 | PHOSPHOR BRONZE | CONTACT AREA:GOLD PLATED 0.4μm min<br>LEAD AREA:TIN PLATED 1μm min<br>UNDER PLATING:NICKEL 0.3μm min | 7 | PS | BLACK(PLASTIC REEL) |
| | | | 6 | POLYIMIDE | BROWN(HEAT-RESISTANCE TAPE) |
| | | | 5 | POLYESTER | CLEAR(COVER TAPE) |
| 1 | POLYAMIDE | BEIGE, UL94V-0 | 4 | PS | CLEAR(EMBOSSED CARRIER TAPE) |

| UNITS | SCALE | COUNT | DESCRIPTION OF REVISIONS | DESIGNED | CHECKED | DATE |
|---|---|---|---|---|---|---|
| mm | 5 : 1 | | | | | |

HRS HIROSE ELECTRIC CO., LTD.

| | | | | |
|---|---|---|---|---|
| APPROVED | : KH. IKEDA | 13.10.10 | DRAWING NO. | EDC3-341299-78 |
| CHECKED | : YH. MICHIDA | 13.10.09 | PART NO. | DF9B-*P-1V(68) |
| DESIGNED | : YN. SAKAMOTO | 13.10.09 | CODE NO. | CL540- |
| DRAWN | : YN. SAKAMOTO | 13.10.09 | | 1/2 |

HRS DRAWING FOR REFERENCE

Sep.1.2021 Copyright 2021 HIROSE ELECTRIC CO., LTD. All Rights Reserved.
In case of consideration for using Automotive equipment / device which demand high reliability, kindly contact our sales window correspondents.

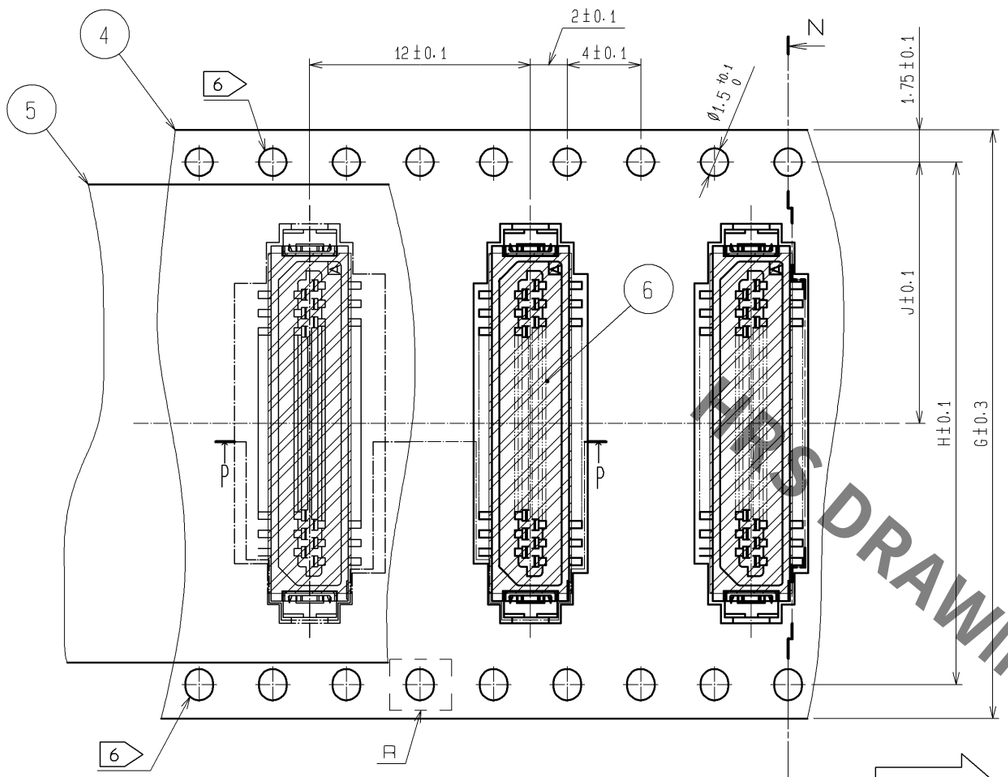


N-N(3:1)

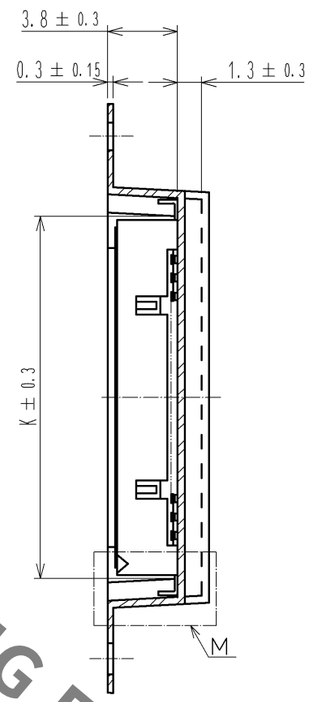

DIRECTION OF UNREELING

7 P-P(3:1)

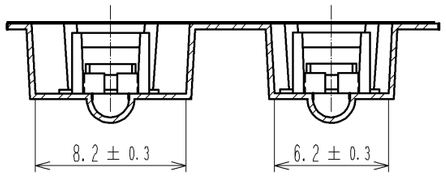


STYLE AND DIMENSION OF REEL (FREE)

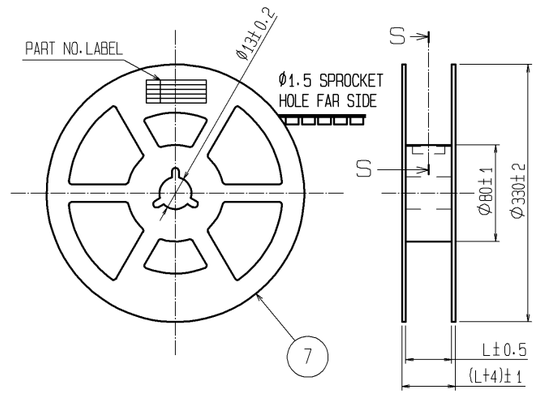


| PART No. | CODE No. | NUMBER OF CONTACTS | G | H | J | K | L |
|---|---|---|---|---|---|---|---|
| DF9B- 9P-1V(68) | - | 9 | 24 | — | 11.5 | 8.7 | 25.5 |
| DF9B-11P-1V(68) | - | 11 | 24 | — | 11.5 | 9.7 | 25.5 |
| DF9B-13P-1V(68) | - | 13 | 24 | — | 11.5 | 10.7 | 25.5 |
| DF9B-15P-1V(68) | - | 15 | 24 | — | 11.5 | 11.7 | 25.5 |
| DF9B-17P-1V(68) | - | 17 | 24 | — | 11.5 | 12.7 | 25.5 |
| DF9B-19P-1V(68) | - | 19 | 24 | — | 11.5 | 13.7 | 25.5 |
| DF9B-21P-1V(68) | - | 21 | 24 | — | 11.5 | 14.7 | 25.5 |
| DF9B-23P-1V(68) | - | 23 | 32 | 28.4 | 14.2 | 15.7 | 33.5 |
| DF9B-25P-1V(68) | CL540-0142-5-68 | 25 | 32 | 28.4 | 14.2 | 16.7 | 33.5 |
| DF9B-31P-1V(68) | - | 31 | 32 | 28.4 | 14.2 | 19.7 | 33.5 |
| DF9B-41P-1V(68) | CL540-0221-0-68 | 41 | 44 | 40.4 | 20.2 | 24.7 | 45.5 |

M(10:1)

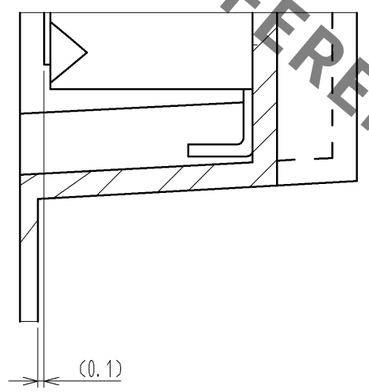


NOTES 4 : 1 REEL 1000 CONNECTORS.
5 : AT THE BEIGINNING OF THE REEL,
30 COMPONENTS SHALL BE EMPTY.
AT THE END OF THE REEL,
20 COMPONENTS SHALL BE EMPTY.
6 : LET THE SENDING HOLE OF 9 TO 21 CONTACTS
BE ONLY THE UPPER ONE SIDE TOWARD A DRAWING.
THE SENDING HOLE OF 23 OR MORE CONTACTS
IS ESTABLISHED IN BOTH SIDES, AS SHOWN IN A FIGURE.
7 : A POCKET SHAPE IS DIFFERET AT INTERVALS OF EACH
CAVITY NUMBER TO AVOID OVERLAP.
8 : REFER TO JIS C 0806 AND IEC 60286-3.
(PACKAGING OF COMPONENTS FOR AUTOMATIC HANDLING)
9 : AFTER PACKING, ROLL 2 METERS OF THE REINFORCEMENT
COLLAR TO OUTER CIRCUMFERENCE OF TAPE AND REEL
POCKET, AND TAPE DOWN AT THE END THE COLLAR.

R(10:1)

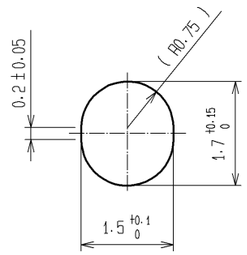


DETAIL OF PART NO. LABEL

- SUPPLIER
- QUANTITY
- PART NO.
- CODE NO.
- DATE OF MANUFACTURED

| | |
|---|---|
| 生産月日 | 年　月　日 |
| 図番 | CL540-****-**-68 |
| 品名 | DF9B-*P-1V(68) |
| 納入数量 | 1000Ko |
| 納入者 | ヒロセ電機(株) |

S-S(FREE)

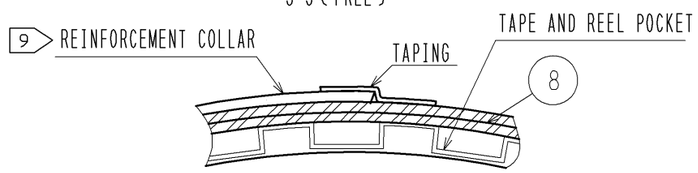


HRS DRAWING FOR REFERENCE

| | |
|---|---|
| DRAWING NO. | EDC3-341299-78 |
| PART NO. | DF9B-*P-1V(68) |
| CODE NO. | CL540- |

△ 2/2

# Mouser Electronics

Authorized Distributor

Click to View Pricing, Inventory, Delivery & Lifecycle Information:

Hirose Electric:

DF9B-25P-1V(68)