Aug.1.2021 Copyright 2021 HIROSE ELECTRIC CO., LTD. All Rights Reserved.
In case of consideration for using Automotive equipment / device which demand high reliability, kindly contact our sales window correspondents.

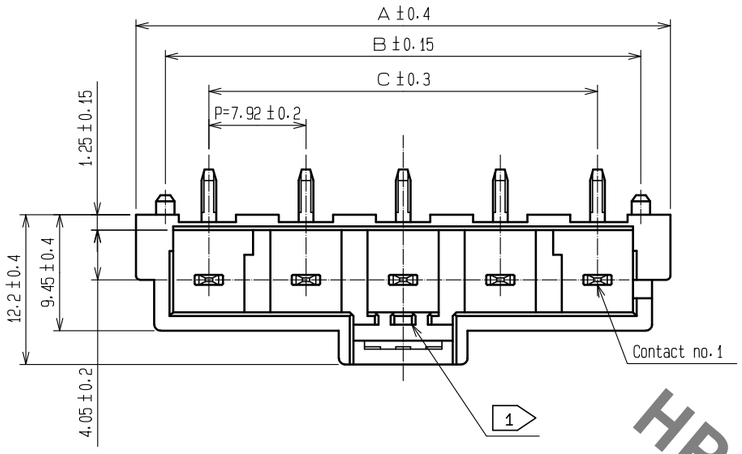

Part no.	Code no.	Number of contact	A	B	C
DF22-2P-7.92DS(53)	CL680-1008-5-53	2	19.80	15.00	7.92
DF22-3P-7.92DS(53)	CL680-1009-8-53	3	27.72	22.92	15.84
DF22-4P-7.92DS(53)	CL680-1010-7-53	4	35.64	30.84	23.76
DF22-5P-7.92DS(53)	CL680-1011-0-53	5	43.56	38.76	31.68

Recommended PCB layout (PCB thickness:1.6mm)

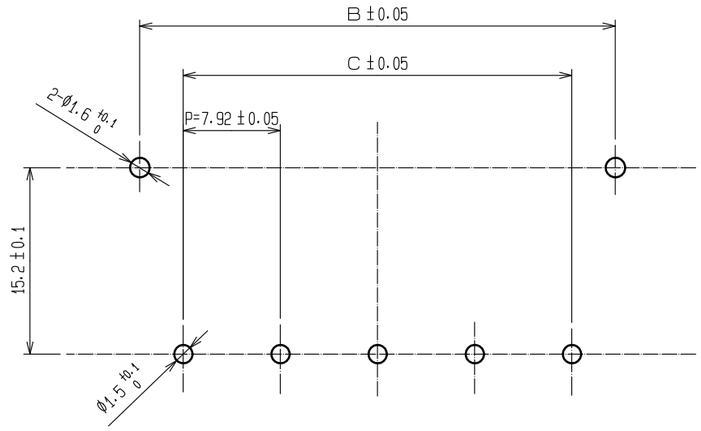

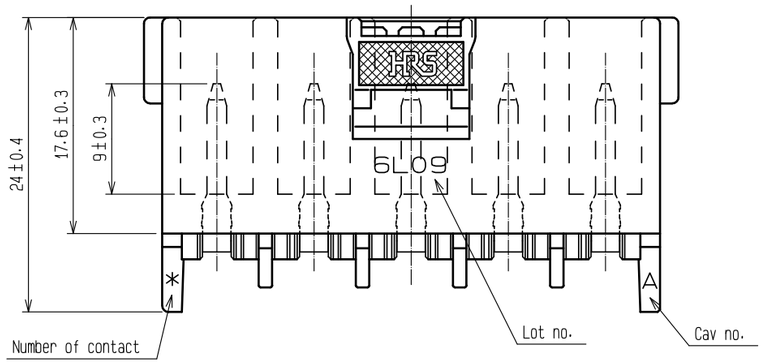

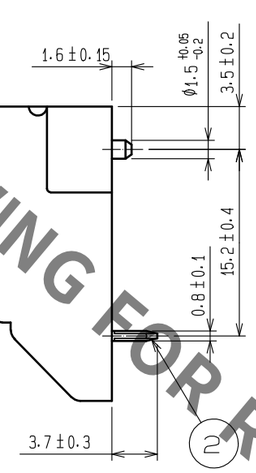

Application diagram

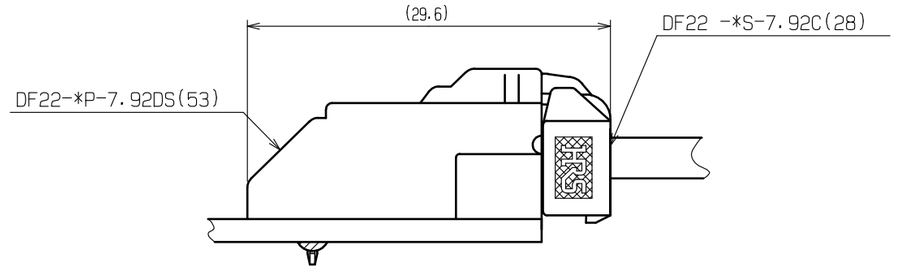

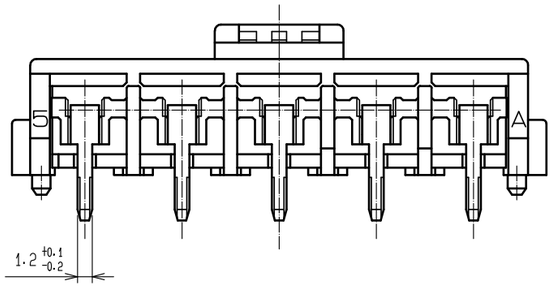

1
Configuration of
DF22-2P-7.92DS(53) DF22-4P-7.92DS(53)

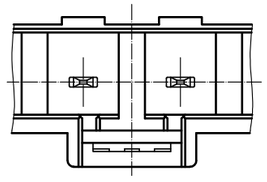

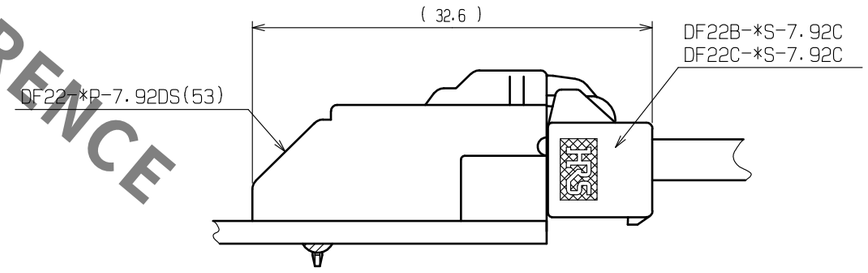

HRS DRAWING FOR REFERENCE

Notes 1 TWO AND FOUR CONTACTS ARE DIFFERENT SHAPE AS SHOWN.
2. UL(File no.E52653)
C-UL(File no.E52653)
TÜV(Certificate no.R9950703)

3:PER PACK:100PIECES

NO.	MATERIAL	FINISH , REMARKS	NO.	MATERIAL	FINISH , REMARKS
1	Polyamide	Natural(beige),UL94V-0	2	Copper alloy	Contact area:Gold plating 0.2μm min Lead area:Tin plating 1μm min Under plating:Nickel platig 1μm min Other:Nickel plating 1μm min

UNITS	SCALE	COUNT	DESCRIPTION OF REVISIONS	DESIGNED	CHECKED	DATE
mm	2 : 1	0				

HIROSE ELECTRIC CO., LTD.

APPROVED	HS. OKAWA	20200309	DRAWING NO.	EDC-163718-53-00
CHECKED	SZ. ONO	20200309	PART NO.	DF22-*P-7.92DS(53)
DESIGNED	SN. MIWA	20200309	CODE NO.	CL680-
DRAWN	DS. HIROWATARI	20200306		0 1/2

FORM HC0011-5-7

Aug.1.2021 Copyright 2021 HIROSE ELECTRIC CO., LTD. All Rights Reserved.
In case of consideration for using Automotive equipment / device which demand high reliability, kindly contact our sales window correspondents.

Precautions

Notification for Insertion Extraction

1) Please insert(extract) the crimping socket straight to the mating connector.
Insertion(extraction) at tilted angles applies load concentration to the connetor end and may cause deformation (at connection area, socket and header case, etc). There is firing risk using this kind of defomed connector.

Insertion(Extraction)

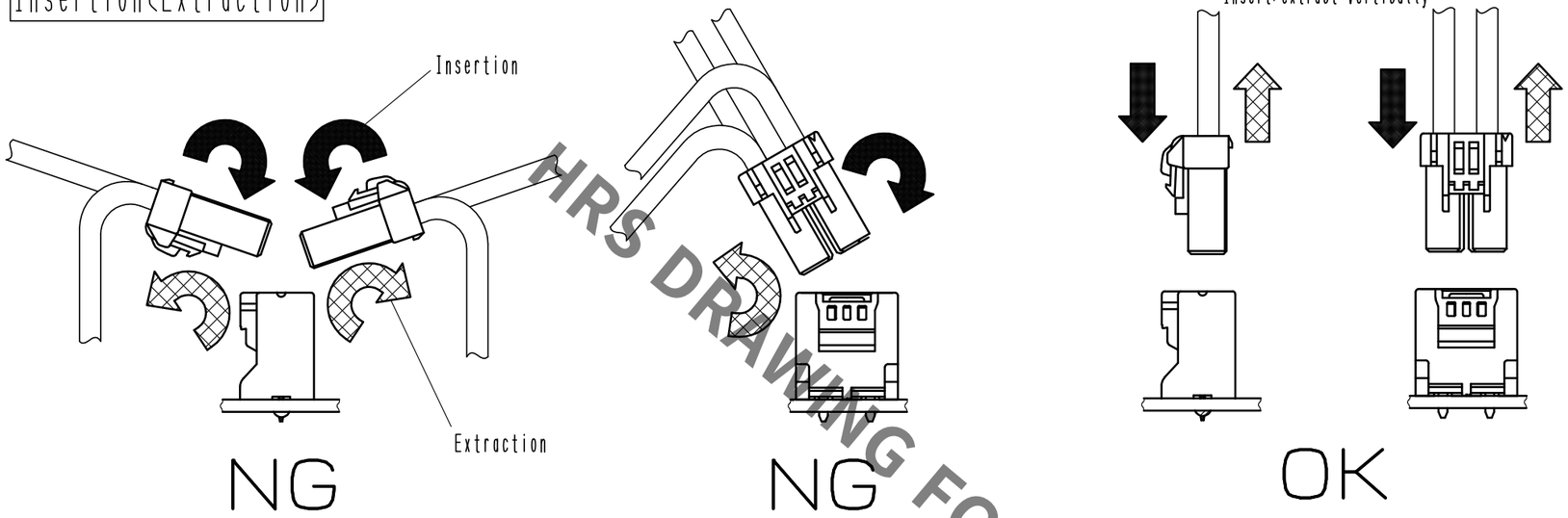

2) When it is hard to extract, please lightly insert the connector beforehand and then pull it with releasing the lock.
Forced extraction has a risk of connector breakage.

Notification of wiring

1) When using a thick cable, short cable length and bending close to the connector end, these load concentration may couse deformation.
Please note that there is firing risk using deformed connector.
When installing, please refrain from stress concentration such as cable bending close to the connector end or cable twisting.

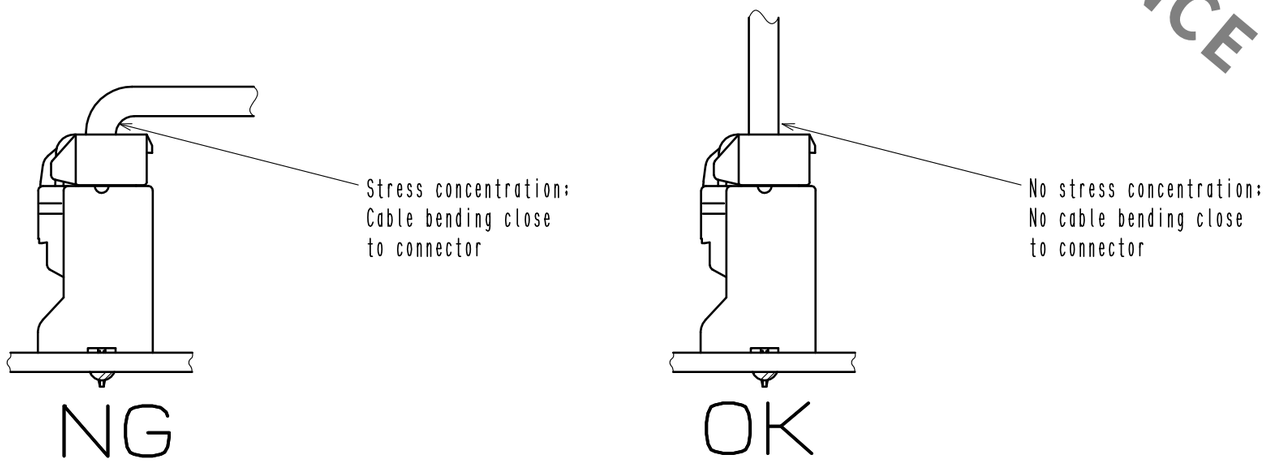

2) Since this product uses thick wires, a larger load is applied to the connector when inserting/extracting or routing the wires.
Please use a retainer to reduce the load on the connector.

HRS DRAWING FOR REFERENCE

HRS	DRAWING NO.	EDC-163718-53-00
	PART NO.	DF22-*P-7.92DS(53)
	CODE NO.	CL680- 0 2/2

Mouser Electronics

Authorized Distributor

Click to View Pricing, Inventory, Delivery & Lifecycle Information:

Hirose Electric:

DF22-4P-7.92DS(53)