Jul.1.2020 Copyright 2020 HIROSE ELECTRIC CO., LTD. All Rights Reserved.
In case of consideration for using Automotive equipment / device which demand high reliability, kindly contact our sales window correspondents.

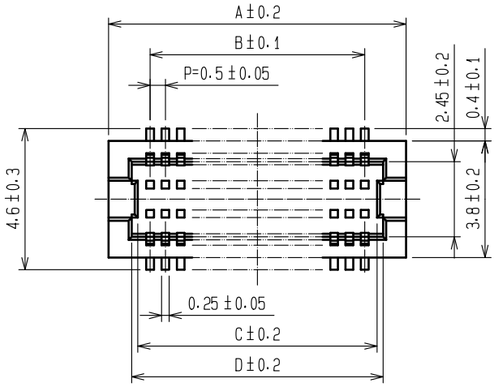

G-G(10:1)

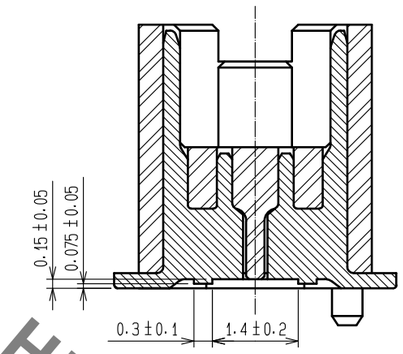

CODE No.	CONTACT	A	B	C	D	E	F
CL537-0478-3-81	20	7.2	4.5	5.3	5.7	6.6	5.3
CL537-0480-5-81	30	9.7	7.0	7.8	8.2	9.1	7.8
CL537-0481-8-81	36	11.2	8.5	9.3	9.7	10.6	9.3
CL537-0482-0-81	40	12.2	9.5	10.3	10.7	11.6	10.3
CL537-0484-6-81	50	14.7	12.0	12.8	13.2	14.1	12.8
CL537-0486-1-81	60	17.2	14.5	15.3	15.7	16.6	15.3

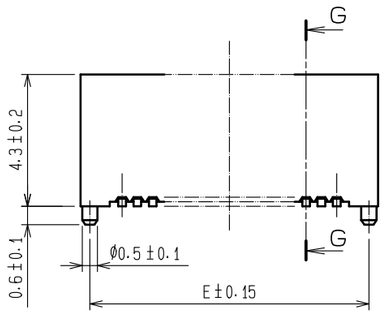

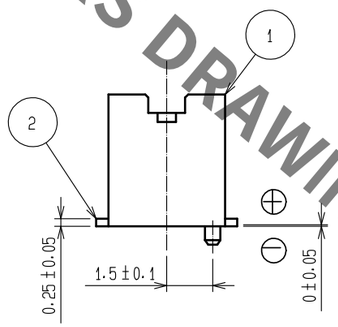

RECOMMEND METAL MASK PATTERN (10:1)

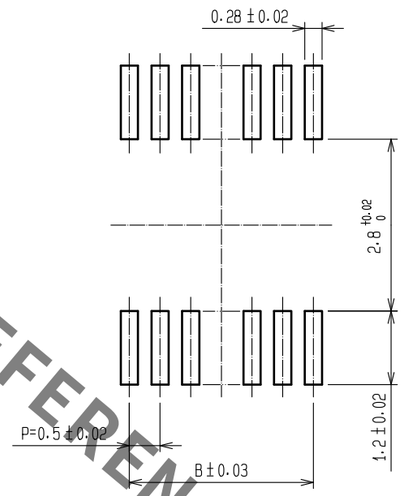

RECOMMENDED THICKNESS OF METAL MASK : 120 μm

RECOMMENDED LAND PATTERN (10:1)

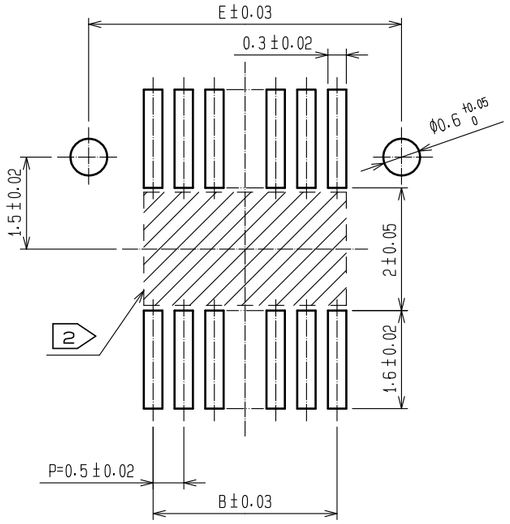

RECOMMENDED THICKNESS OF SOLDER PASTE : 120 μm

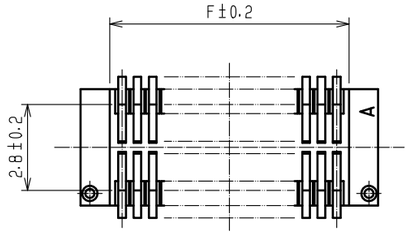

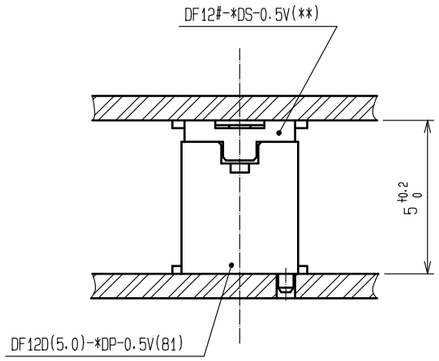

HRS DRAWING FOR REFERENCE

NOTES 1 LEAD CO-PLANARITY SHALL BE 0.08 mm MAX.
2 IF THERE IS PATTERN ON ▨ PART, THERE IS A POSSIBILITY THAT IT WILL MAKE CONTACT WITH THE LEADS.

NO.	MATERIAL	FINISH , REMARKS	NO.	MATERIAL	FINISH , REMARKS
2	PHOSPHOR BRONZE	CONTACT AREA:GOLD PLATED 0.2μm min LEAD AREA:GOLD PLATED 0.015μm min OTHERS(UNDER PLATING):NICKEL PLATED 2μm min	6	PS	CLEAR (REINFORCEMENT COLLAR)
			5	PS	BLACK (PLASTIC REEL)
			4	POLYESTER	CLEAR (COVER TAPE)
1	POLYAMIDE	UL94V-0, NATURAL(BEIGE)	3	PS	CLEAR (EMBOSSED CARRIER TAPE)

UNITS	SCALE	COUNT	DESCRIPTION OF REVISIONS	DESIGNED	CHECKED	DATE
mm	5 : 1	0				

HRS HIROSE ELECTRIC CO., LTD.

APPROVED	: WR. FUKUCHI	20190409	DRAWING NO.	EDC-163515-81-78
CHECED	: WR. FUKUCHI	20190409	PART NO.	DF12D(5.0)-*DP-0.5V(81)
DESIGNED	: KT. KUSAKA	20190409	CODE NO.	CL537
DRAWN	: RN. IIDA	20190409		0 1/2

Jul.1.2020 Copyright 2020 HIROSE ELECTRIC CO., LTD. All Rights Reserved.
In case of consideration for using Automotive equipment / device which demand high reliability, kindly contact our sales window correspondents.

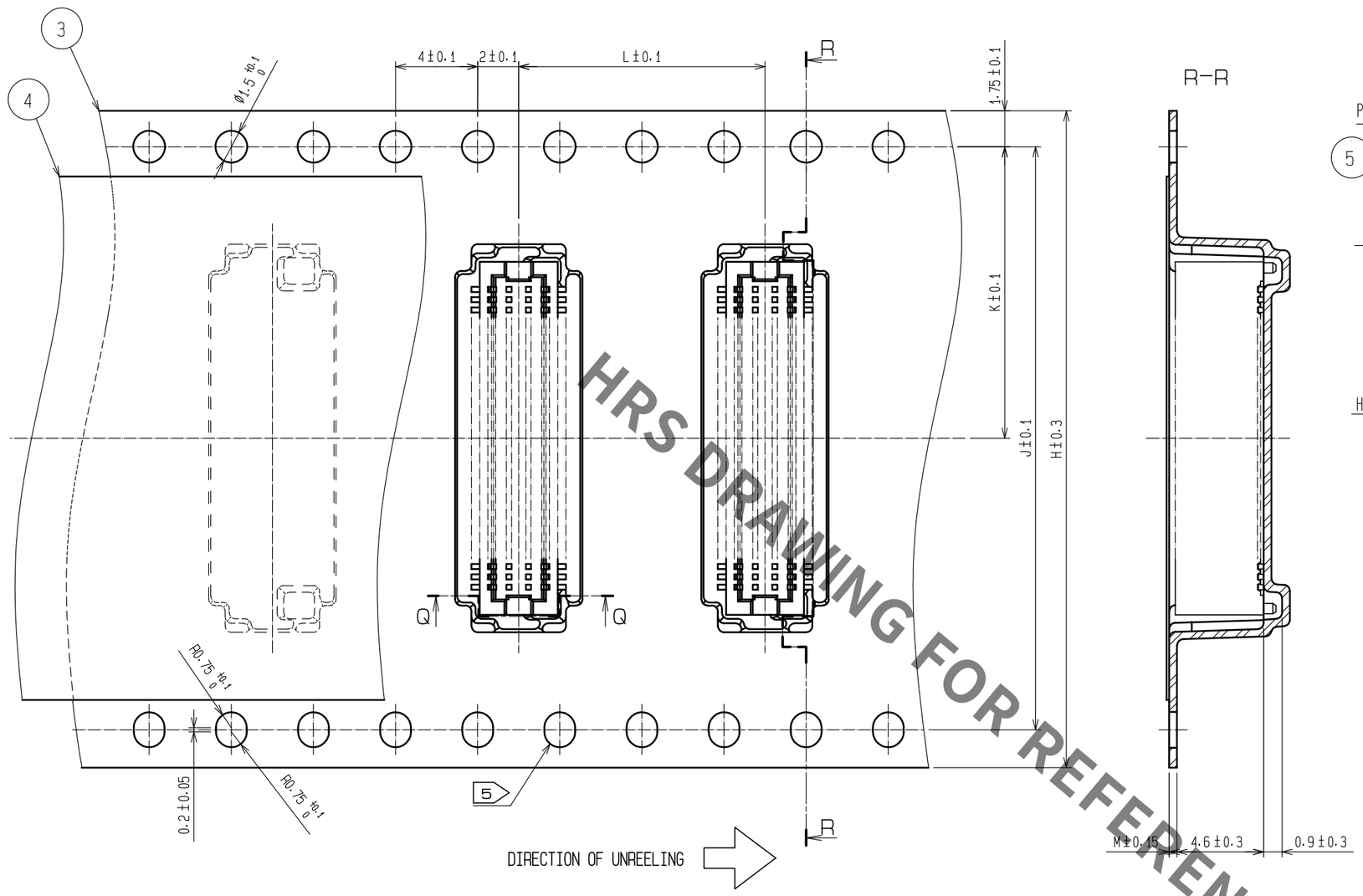

STYLE AND DIMENTION OF REEL (FREE)

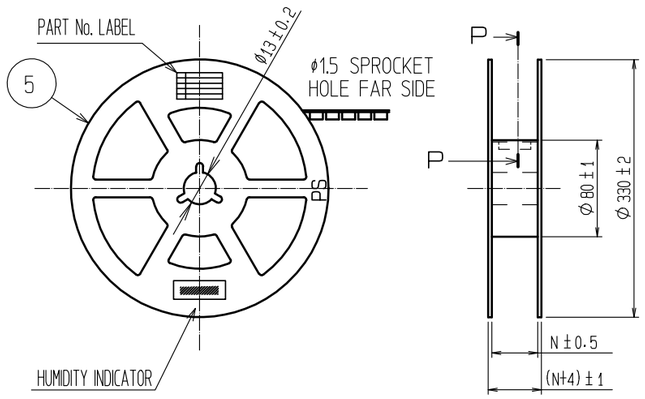

P-P (FREE)

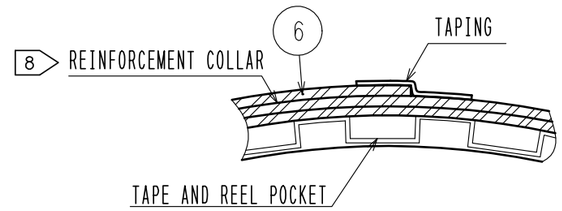

Q-Q

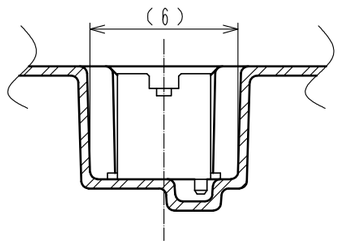

CODE No.	CONTACT	H	J	K	L	M	N
CL537-0478-3-81	20	16	-	7.5	12.0	0.38	17.5
CL537-0480-5-81	30	24	-	11.5	12.0	0.38	25.5
CL537-0481-8-81	36	24	-	11.5	12.0	0.38	25.5
CL537-0482-0-81	40	24	-	11.5	12.0	0.38	25.5
CL537-0484-6-81	50	24	-	11.5	8.0	0.30	25.5
CL537-0486-1-81	60	32	28.4	14.2	12.0	0.38	33.5

NOTES 3 1 REEL 1000 CONNECTORS.

4 AT THE BEGINNING OF THE REEL, 30 COMPONENTS SHALL BE EMPTY.
AT THE END OF THE REEL, 20 COMPONENTS SHALL BE EMPTY.

5 WHEN THE TAPE WIDTH IS 32 mm, SPROCKET HOLES SHALL BE SET ON BOTH SIDE OF REEL AS SHOWN ON THIS DRAWING.

6 PEEL FORCE REFERS TO JIS C 0806.(IEC 60286-3)

7 SPECIAL PACKING IS APPLIED FOR THIS PRODUCT, USING POLYAMIDE RESIN, TO IMPROVE MOISTURE RESISTANCE.
AFTER OPENING AND WHEN RESTORING IS NEEDED, PLEASE PUT THE PRODUCT WITH DESICCANT IN A SEALED ALUMINIUM BAG.
IN CASE THE COLOR OF THE INDICATOR(30%) TURNED TO PINK, DO BAKING THE PRODUCTS(50℃, 48HOURS).

8 AFTER PACKING, ROLL 2 METERS OF THE REINFORCEMENT COLLAR TO OUTER CIRCUMFERENCE OF TAPE AND REEL POCKET, AND TAPE DOWN AT THE END THE COLLAR.

HRS DRAWING FOR REFERENCE

HRS	DRAWING NO.	EDC-163515-81-78
	PART NO.	DF12D(5.0)-*DP-0.5V(81)
	CODE NO.	CL537 — 0 — 2/2

Mouser Electronics

Authorized Distributor

Click to View Pricing, Inventory, Delivery & Lifecycle Information:

Hirose Electric:

DF12D(5.0)-40DP-0.5V(81)