May.1.2021 Copyright 2021 HIROSE ELECTRIC CO., LTD. All Rights Reserved.
In case of consideration for using Automotive equipment / device which demand high reliability, kindly contact our sales window correspondents.

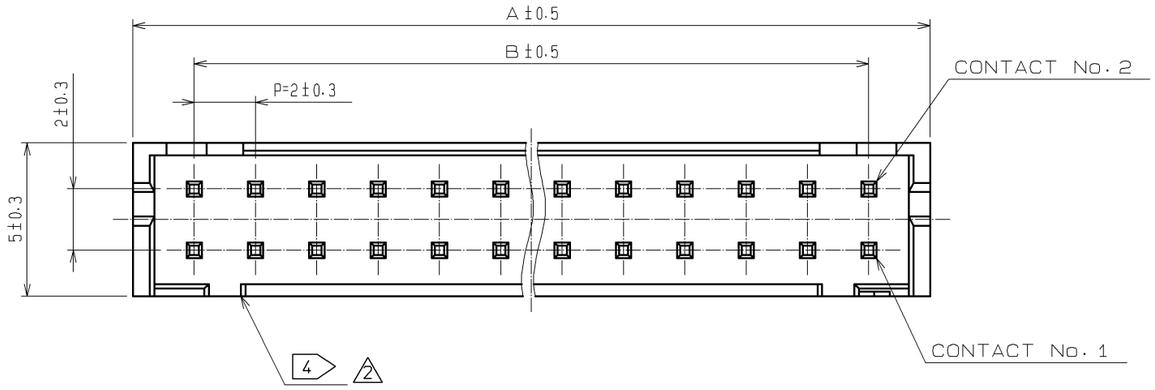

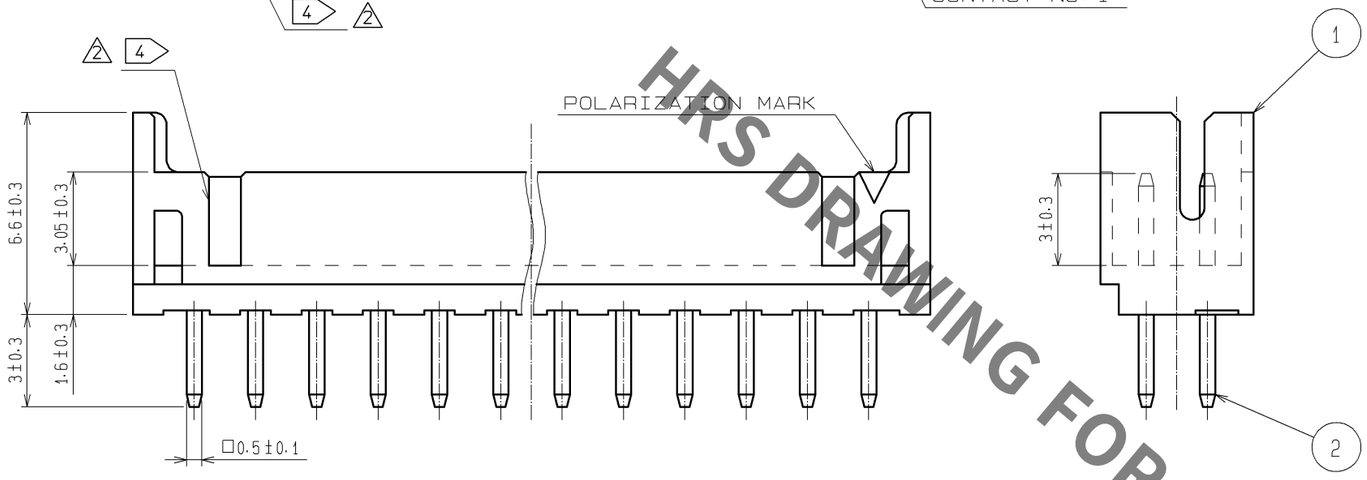

CL NO.	PART NO.	NUMBER OF CONTACT	A	B
CL543-0517-5-08	DF11- 4DP-2DSA(08)	4	6.0	2.0
CL543-0518-8-08	DF11- 6DP-2DSA(08)	6	8.0	4.0
CL543-0519-0-08	DF11- 8DP-2DSA(08)	8	10.0	6.0
CL543-0520-0-08	DF11-10DP-2DSA(08)	10	12.0	8.0
CL543-0521-2-08	DF11-12DP-2DSA(08)	12	14.0	10.0
CL543-0522-5-08	DF11-14DP-2DSA(08)	14	16.0	12.0
CL543-0523-8-08	DF11-16DP-2DSA(08)	16	18.0	14.0
CL543-0524-0-08	DF11-18DP-2DSA(08)	18	20.0	16.0
CL543-0525-3-08	DF11-20DP-2DSA(08)	20	22.0	18.0
CL543-0526-6-08	DF11-22DP-2DSA(08)	22	24.0	20.0
CL543-0527-9-08	DF11-24DP-2DSA(08)	24	26.0	22.0
CL543-0528-1-08	DF11-26DP-2DSA(08)	26	28.0	24.0
CL543-0529-4-08	DF11-28DP-2DSA(08)	28	30.0	26.0
CL543-0530-3-08	DF11-30DP-2DSA(08)	30	32.0	28.0
CL543-0531-6-08	DF11-32DP-2DSA(08)	32	34.0	30.0

HRS DRAWING FOR REFERENCE

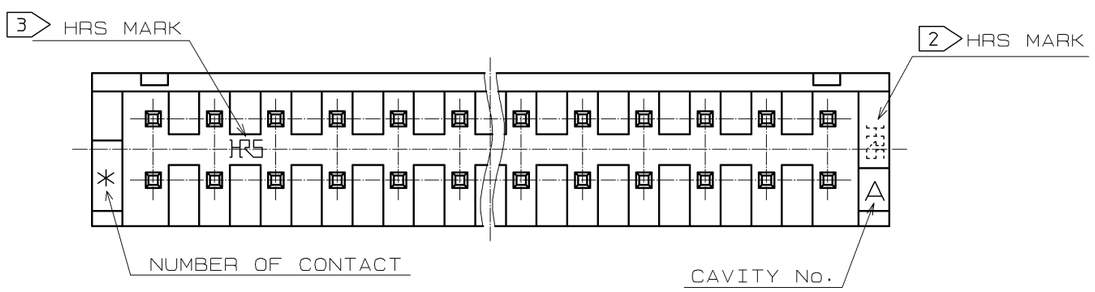

RECOMMENDED PATTERN (BOARD THICKNESS t=1.6mm)

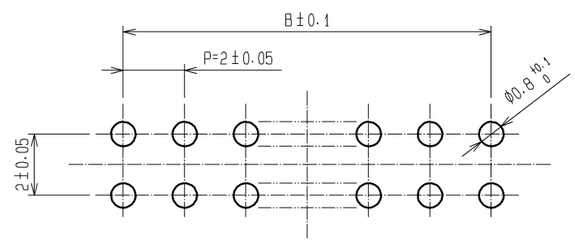

2 4 CONFIGURATION OF
DF11-4P/6P/8P-2DSA(08)

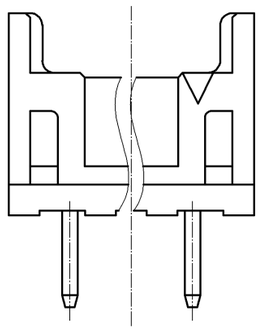

NOTES 1 : 100 PIECES PER PACK.
2 : HRS MARK OF 4 OR 6 CONTACTS ARE INDICATED IN APPROXIMAL POSITION SHOWN.
3 : IF MORE THAN 8 CONTACTS, HRS MARK ARE INOICATED IN APPROXIMAL POSITION SHOWN.
2 4 : FOR 4, 6 AND 8 CONTACTS, ONE MIS-INSERTION DEPRESSION SHALL BE MADE, FOR OTHERS, 2 MIS-INSERTION DEPRESSION AS PER DRAWING.

NO.	MATERIAL	FINISH , REMARKS	NO.	MATERIAL	FINISH , REMARKS
1	POLYAMIDE	BLACK, UL94V-0	2	BRASS	SURFACE:TIN PLATING 1μm min UNDER PLATING:NICKEL PLATED 0.5μm min

UNITS	SCALE		COUNT	DESCRIPTION OF REVISIONS	DESIGNED	CHECKED	DATE
mm	5 : 1	2	4	DIS-H-004241	TH. YOSHIZAWA	TS. FUKUSHIMA	09. 10. 09

HRS HIROSE ELECTRIC CO., LTD.

APPROVED	KJ. KATAYOSE	05. 01. 05
CHECKED	TY. OMA	05. 01. 05
DESIGNED	IO. DENPOUYA	05. 01. 05
DRAWN	IO. DENPOUYA	05. 01. 05

DRAWING NO. EDC3-084377-01
PART NO. DF11-**DP-2DSA(08)
CODE NO. CL543-
2 1/1

FORM HC0011-5-7

Mouser Electronics

Authorized Distributor

Click to View Pricing, Inventory, Delivery & Lifecycle Information:

Hirose Electric:

DF11-6DP-2DSA(08)