Customer Information Sheet

DRAWING No.: M80-714XXXX	SHEET 2 OF 2	IF IN DOUBT - ASK	©	NOT TO SCALE	THIRD ANGLE PROJECTION	ALL DIMENSIONS IN mm

ORDER CODE:

M80-714XXXX

TOTAL No. OF CONTACTS:
06, 15, 24, 30, 42

FINISH:
01 = TIN/LEAD BODY, GOLD CLIP
05 = GOLD BODY, GOLD CLIP
42 = 100% TIN BODY, GOLD CLIP

POTTING WALLS:
BLANK = POTTING WALLS REMOVED
A = POTTING WALLS RETAINED

NOTES:
1. FROM No. 1 POSITION, CONTACTS NUMBERED IN SEQUENCE FROM RIGHT TO LEFT AND FROM BOTTOM ROW TO TOP ROW (LOOKING ON BACK FACE).

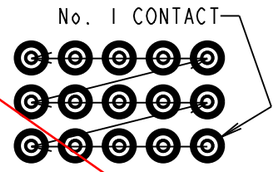

SPECIFICATION:
MATERIALS:
MOULDING = POLYAMIDE 46 UL94V-0
CLIP = BERYLLIUM COPPER
BODY = BRASS
FINISH:
01 = 3.5-5.0µ TIN/LEAD BODY, 0.30µ GOLD CLIP
05 = 0.25-0.30µ GOLD BODY, 0.30µ GOLD CLIP
42 = 3.5-5.0µ 100% TIN BODY, 0.30µ GOLD CLIP
ELECTRICAL:
CURRENT RATING AT 25°C = 3.0A MAX (SMALL), 15.0A MAX (LARGE)
CURRENT RATING AT 85°C = 2.2A MAX (SMALL), 11.0A MAX (LARGE)
VOLTAGE PROOF = 360V AC/DC
CONTACT RESISTANCE (INITIAL) = 20mΩ MAX
CONTACT RESISTANCE (AFTER CONDITIONING) = 25mΩ MAX
INSULATION RESISTANCE (INITIAL) = 1000MΩ MIN
INSULATION RESISTANCE (AFTER CONDITIONING) = 100MΩ MIN
MECHANICAL:
DURABILITY = 500 OPERATIONS
INSERTION FORCE = 1.8N MAX, 0.2N MIN
ENVIRONMENTAL:
TEMPRETURE RANGE = -55°C TO +125°C
PACKING:
TRAYS
FOR COMPLETE SPECIFICATIONS, SEE COMPONENT SPECIFICATION C017XX (LATEST ISSUE)

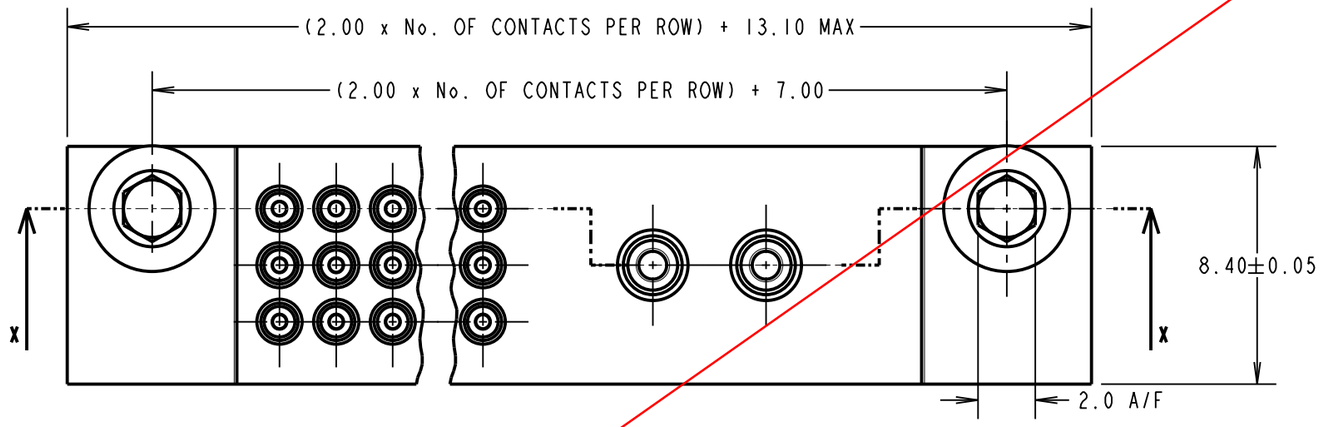

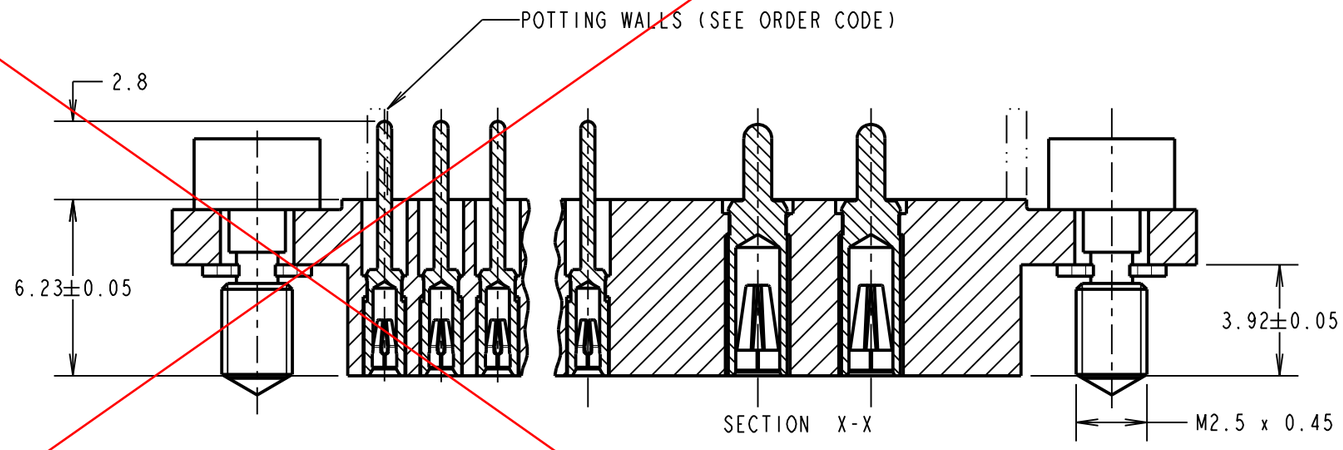

OBSOLETE

RECOMMENDED PCB LAYOUT

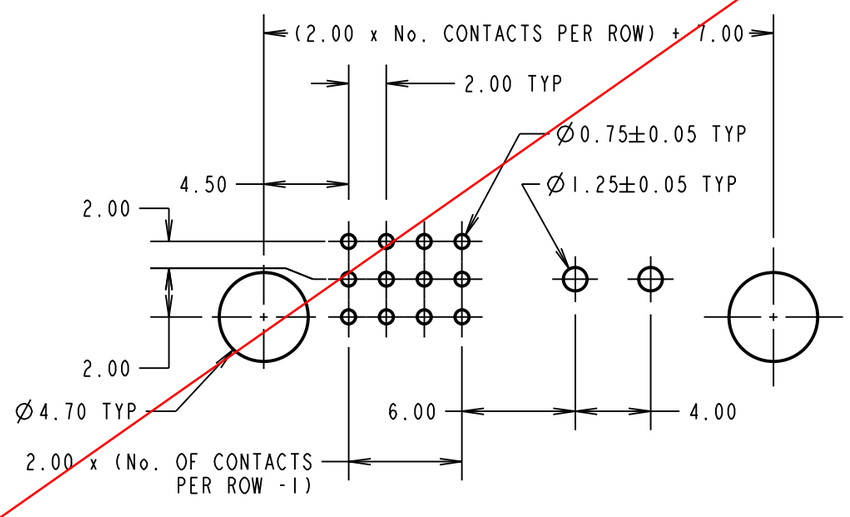

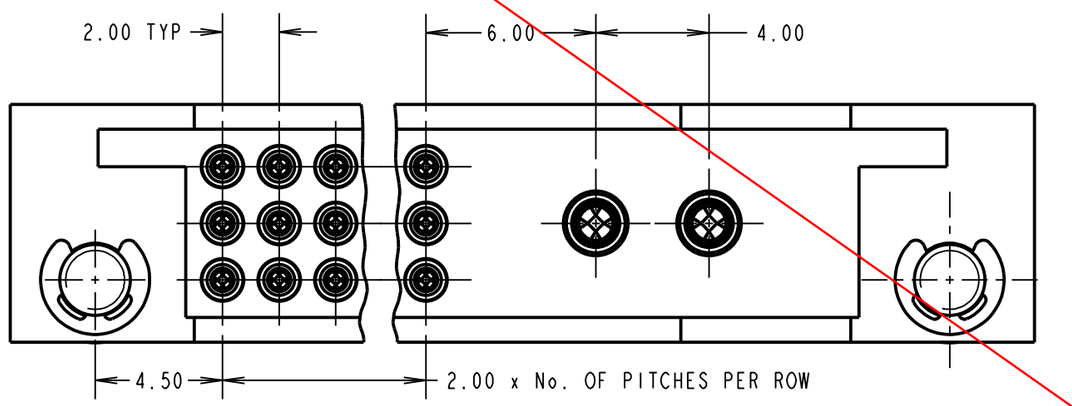

NAME	ISS.	DATE	C/NOTE
MSP	7	20.04.15	12811

APPROVED: M.PERREN
CHECKED: S.BENNETT
DRAWN: M.PERREN
CUSTOMER REF.:
ASSEMBLY DRG:

HARWIN
www.harwin.com
technical@harwin.com

THIS DRAWING AND ANY INFORMATION OR DESCRIPTIVE MATTER SET OUT HEREON ARE CONFIDENTIAL AND COPYRIGHT PROPERTY OF THE HARWIN GROUP AND MUST NOT BE DISCLOSED, LOANED, COPIED OR USED FOR MANUFACTURING, TENDERING OR FOR ANY OTHER PURPOSE WITHOUT THEIR WRITTEN PERMISSION.

TOLERANCES
X. = ±1mm
X.X = ±0.50mm
X.XX = ±0.10mm
X.XXX = ±0.01mm
ANGLES = ±5°
UNLESS STATED

MATERIAL: SEE ABOVE
FINISH: SEE ABOVE
S/AREA: mm²

TITLE: 3-ROW 2mm PITCH FEMALE PC TAIL & POWER SOCKET ASSY & JACKSCREWS

DRAWING NUMBER: M80-714XXXX

SHT 2 OF 2

Mouser Electronics

Authorized Distributor

Click to View Pricing, Inventory, Delivery & Lifecycle Information:

Harwin:
M80-7140601 M80-7140605 M80-7141501 M80-7141505 M80-7142442 M80-7142405 M80-7142401 M80-7144201 M80-7144205 M80-7143005 M80-7143001