REV.	ECN NO.	DATE	SIGN	DESCRIPTION
B	LEN-050099~102	2009/12/28	Li Xiu Zhi	Change View
C	LEN15C0552~555	2015/12/17	Ruru	Change Logo

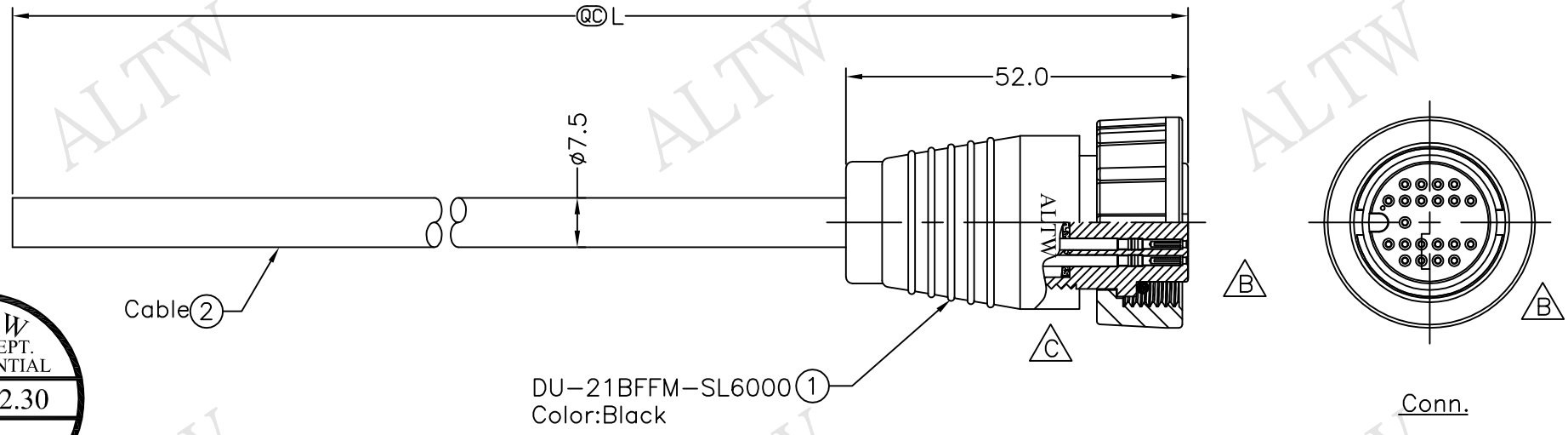

ALTW DCC. DEPT. CONFIDENTIAL 2015.12.30 ISSUED

DU-21BFFM-SL6AXX

XX:01~99Meter
01:01Meter
02:02Meters
:
:
99:99Meters
Cable Length(L):01~99Meters

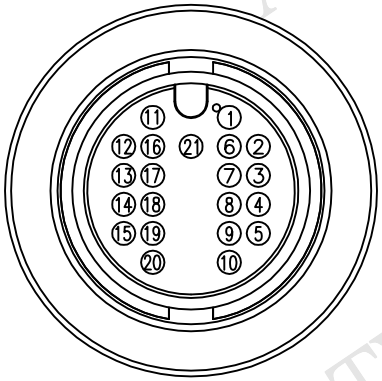

Pin Assignments
Front View

Wire Color	Conn.	Wire Color	Conn.
Pink 粉紅	11		
White 白	10	Orange/Black 橙/黑	21
Gray 灰	9	Red/Black 紅/黑	20
Purple 紫	8	Purple/White 紫/白	19
Blue 藍	7	Blue/White 藍/白	18
Green 綠	6	Green/White 綠/白	17
Yellow 黃	5	Orange/White 橙/白	16
Orange 橙	4	Red/White 紅/白	15
Red 紅	3	Brown/White 棕/白	14
Brown 棕	2	Black/White 黑/白	13
Black 黑	1	Light Green 淺綠	12
Pin Out		Pin Out	

ALTW CONFIDENTIAL 2015.12.17 R&D DEPT.

Note:
* QC Important Dimensions To Check.
* Waterproof Rate: IP66
* Housing:Nylon+GF ,Black
* Female Pin: Copper Alloy,Gold Plated
* O-Ring:EPDM,Black
* Screw Nut:Nylon+GF,Black
* Cable:UL2464 26AWG*22C+Drain+AL.Mylar PVC Jacket UV Resistant, OD=7.5mm,Black
* Cable Length Tolerance: 01M:±40mm
  02M~05M:±60mm
  06M~10M:±100mm
  11M~30M:±200mm
  31M~99M:±500mm

UNIT:mm	TITLE: Large,Cable Screw 21Pin F Conn F Pin	Amphenol LTW 安費諾亮泰企業股份有限公司	ITEM NO	DRAWN BY: Ruru	DATE: 2015/12/17
TOLERANCE: ±0.5mm B	SCALE: Free / SHEET: 1 OF 1		DWG NO: DU-21BFFM-SL6AXX	CHECKED BY: Rita	DATE: 2015/12/17
	REV.: C / SIZE: A4 / QC :Inspection Item		CUSTOMER: ALTW	APPROVED BY: Lisa	DATE: 2015/12/17

THIS DOCUMENT IS SUBJECT TO CHANGE WITHOUT NOTICE. IT IS CONFIDENTIAL AND A PROPERTY OF Amphenol LTW. DISCLOSURE TO THIRD PARTY HAS TO BE AUTHORIZED BY Amphenol LTW.

Mouser Electronics

Authorized Distributor

Click to View Pricing, Inventory, Delivery & Lifecycle Information:

Amphenol:

DU-21BFFM-SL6A02 DU-21BFFM-SL6A05 DU-21BFFM-SL6A10 DU-21BFFM-SL6A01