REV.	ECN NO.	DATE	SIGN	DESCRIPTION
B	LEN1390054	2013-08-28	Micky	Add Certification Information

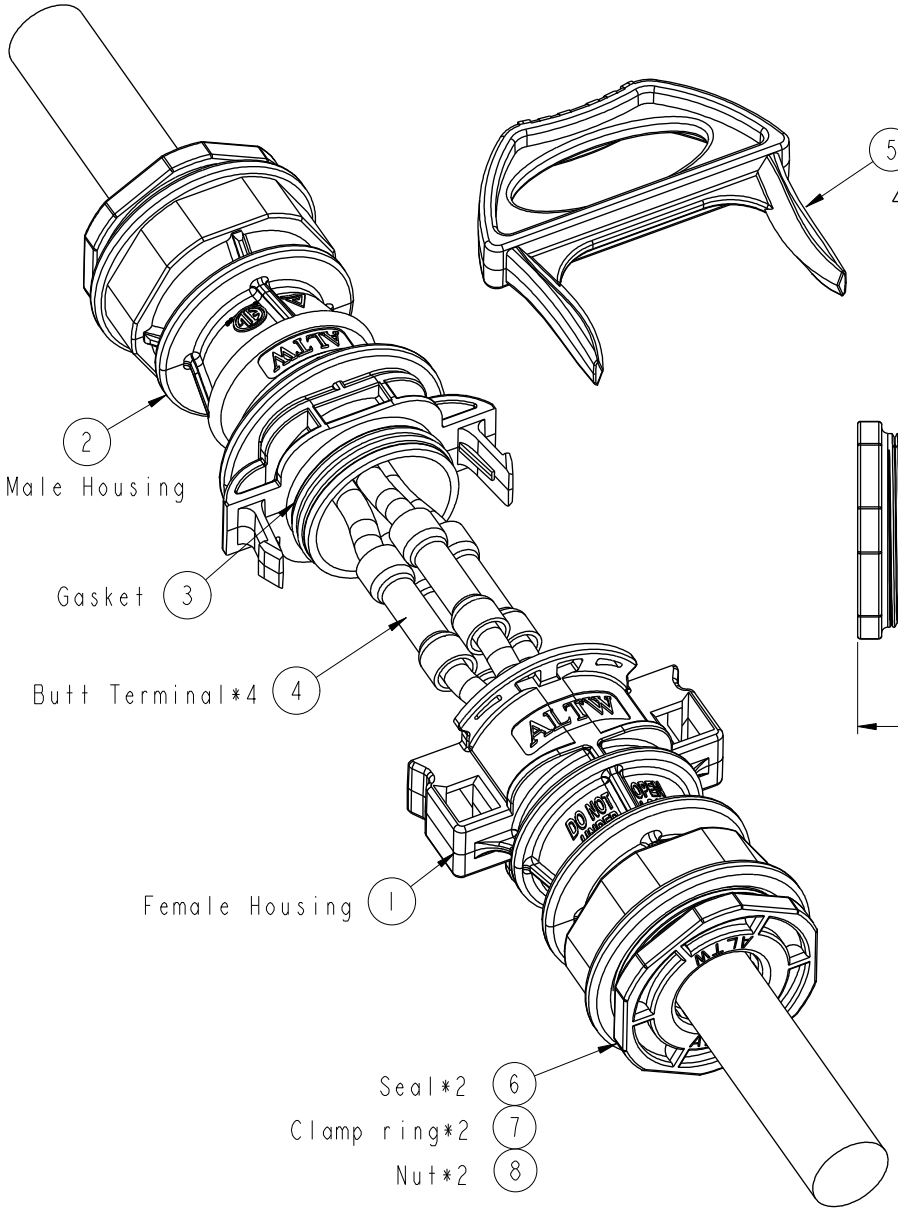

B QC Laser Mark:
YYYY = Year
WW = Week

ALTW DCC. DEPT. CONFIDENTIAL 2013.09.05 ISSUED

B Cable Joiner Housing Part Number
CX-00B0M32-700X

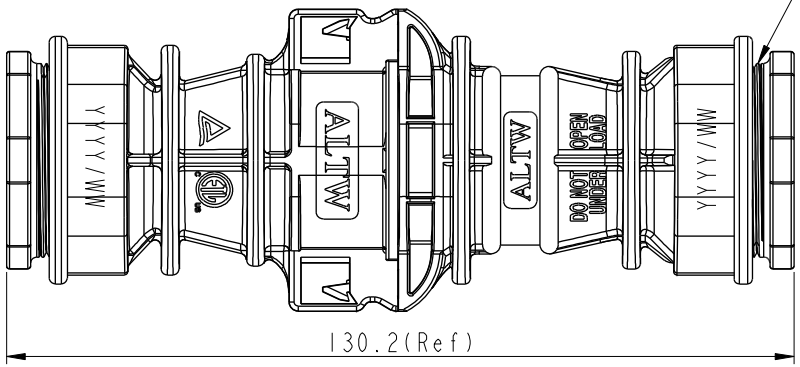

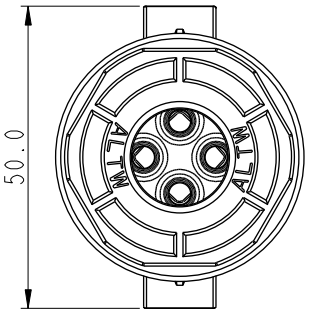

* Recommended sealing Nut torque
Minimum: 25Kgf-cm

ALTW CONFIDENTIAL 2013-08-28 R&D DEPT.

B * CX-00B0M32-700X
UL 6703A & TUV 2pfg 1915
* Butt Terminals
UL 486A/B

Note:
* Waterproof Rate: IP67
* Connector: PPE,Black(UL94-V0 FI)
* Butt Pin: Copper alloy
* Gasket: Silicon,Gray
* Disassembly-Using the Unlock tool.
* Operating Temperature : -40~+105°C
* Withstanding Voltage : 6KV
* Pollution Degree : III
* Cable OD Range: 16mm~12mm
* Wire Range: 10#~12#($4mm^2$~$6mm^2$)
* Avoid oil and gasoline

UNIT:mm	TITLE: Cable joiner 10#~12#($4mm^2$~$6mm^2$) Cable OD Range: 16mm~12mm(4 Conductor)	Amphenol LTW 安費諾亮泰企業股份有限公司	ITEM NO: CX-04BCM32-7001	DRAWN BY: Micky	DATE: 2013-08-28
TOLERANCE .X ±0.5	SCALE: 4:5 / SIZE: A4 / SHEET 1 OF 1		DWG NO: CX-04BCM32-7001	CHECKED BY: Benson	DATE: 2013-08-28
	REV.: B / WC-REV.: B.1 / QC: Inspection item		CUSTOMER: ALTW	APPROVED BY: Victor	DATE: 2013-08-28

FMW10702-01-02A1

THIS DOCUMENT IS SUBJECT TO CHANGE WITHOUT NOTICE. IT IS CONFIDENTIAL AND A PROPERTY OF Amphenol LTW. DISCLOSURE TO THIRD PARTY HAS TO BE AUTHORIZED BY Amphenol LTW.

Mouser Electronics

Authorized Distributor

Click to View Pricing, Inventory, Delivery & Lifecycle Information:

Amphenol:
CX-04BCM32-7001