REV.	ECN NO.	DATE	SIGN	DESCRIPTION
B		2008/09/25	Shin	Add Note
C	LEN-8B0691~694	2008/11/07	Ivan	Change to pin hole
D	LEN1630462~465	2016/03/14	Ruru	Change Logo & Note

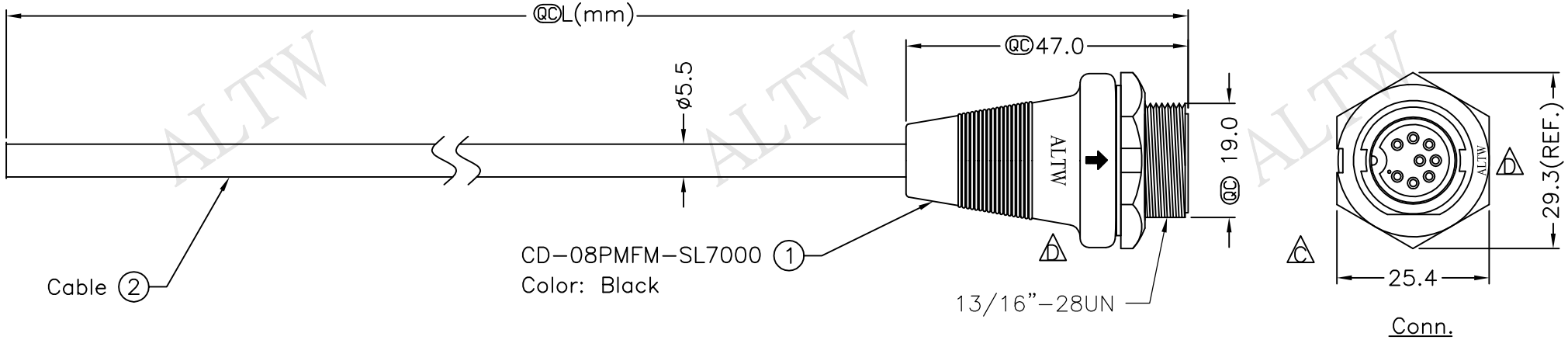

CD-08PMFM-SL7AXX

XX:01~99Meters
01:01Meter
02:02Meters
:
:
99:99Meters
Cable Length(L):01~99Meters

ALTW CONFIDENTIAL 2016.03.14 R&D DEPT.

ALTW DCC. DEPT. CONFIDENTIAL 2016.03.30 ISSUED

Notes:
* QC Important Dimension To Check.
* Waterproof Rate: IP67
* Connector: Black, Nylon+GF
* Pin: Copper Alloy, Gold Plated
* Ring: Black, EPDM
* Nut: Black, Nylon+GF
* Cable: UL2464 24AWG*8C+D+AL/My Black,PVC Jacket UV Resistant, OD=5.5mm
B * Use with waterproof cap or dust cap Panel Thickness Max: 1.2mm
B * Use without waterproof cap or dust cap Panel Thickness Max: 2.0mm
D * Cable Length Tolerance: 01M: ±40mm
02M~05M: ±60mm
06M~10M: ±100mm
11M~30M: ±200mm
31M~99M: ±500mm

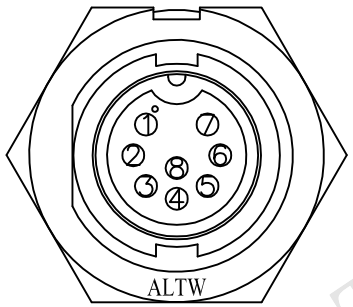

Pin Assignments
Front View

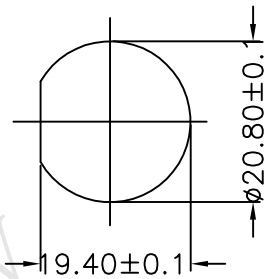

Recommended
Panel Cut-Out

Conn.	Wire Color	
8	Green	綠
7	Yellow	黃
6	Orange	橘
5	Red	紅
4	Blue	藍
3	White	白
2	Brown	棕
1	Black	黑

Pin Out

UNIT:mm	TITLE: Middle Cable Screw 8Pin M Conn F Pin	ITEM NO	DRAWN BY: Ruru / DATE: 2016/03/14
TOLERANCE: ±0.5 mm	SCALE: Free / SHEET: 1 OF 1	DWG NO: CD-08PMFM-SL7AXX	CHECKED BY: Rita / DATE: 2016/03/14
	REV.: D / SIZE: A4 / QC :Inspection Item	CUSTOMER: ALTW	APPROVED BY: Lisa / DATE: 2016/03/14

Amphenol LTW
安費諾亮泰企業股份有限公司

THIS DOCUMENT IS SUBJECT TO CHANGE WITHOUT NOTICE. IT IS CONFIDENTIAL AND A PROPERTY OF Amphenol LTW. DISCLOSURE TO THIRD PARTY HAS TO BE AUTHORIZED BY Amphenol LTW.

Mouser Electronics

Authorized Distributor

Click to View Pricing, Inventory, Delivery & Lifecycle Information:

Amphenol:

CD-08PMFM-SL7A02 CD-08PMFM-SL7A01 CD-08PMFM-SL7A05 CD-08PMFM-SL7A10