REV.	ECN NO.	DATE	SIGN	DESCRIPTION
A	Initial Release	2018/03/14	Mafei	Change Rev.01 To Rev.A
B	E191814	2019/10/23	Ruru	B X3

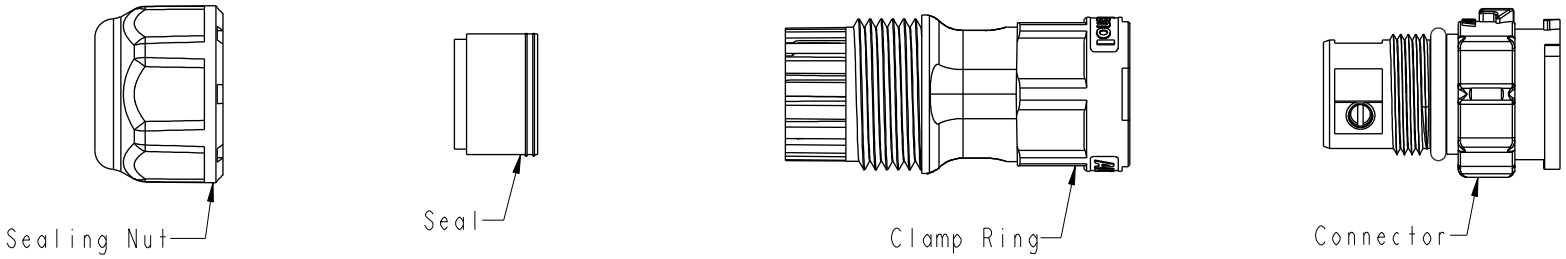

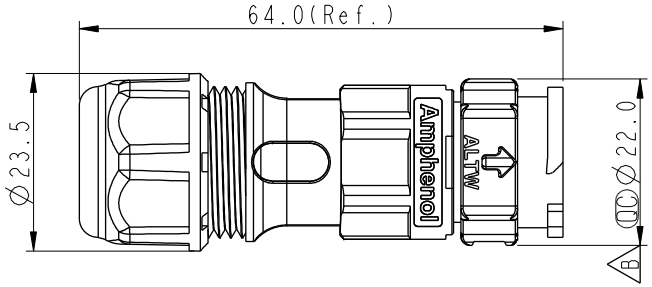

CC-XXBMMB-QLXPP

02-2 Pin
03-3 Pin

S: With Red Color Seal 1, Cable OD 6.0~8.0mm.
M: With Yellow Color Seal 2, Cable OD 8.0~10.0mm.
L: With Blue Color Seal 3, Cable OD 10.0~12.0mm.
A: With Seal 1& Seal 2 & Seal 3.

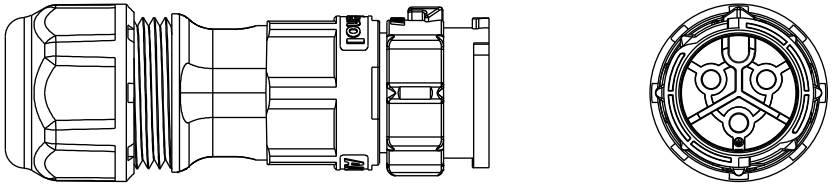

Pin Assignments Front View

2 Pin

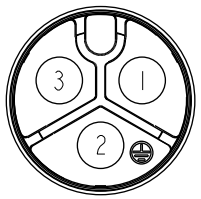

3 Pin

B Note:
* QC Important Dimension
* Waterproof Rate: IP68, Mated
  IP68 : 1M Depth Of Water In 24hours
* Housing: Thermoplastic, Black
* Pin: Copper Alloy, Gold Plated
* Clamp Ring: Thermoplastic, Black
* Sealing Nut: Thermoplastic, Black
* Seals: Rubber

UNIT:mm	TITLE: XLOK, C-20A, 02P, CABLE W/O SR M, M, FI SCREWIN, XLOK B	Amphenol LTW 安費諾亮泰企業股份有限公司	ITEM NO	DRAWN BY: Mafei	DATE: 2018-03-14
TOLERANCE ±0.5 mm	SCALE: 8:5 / SIZE: A4 / SHEET: 1 OF 2		DWG NO: CC-XXBMMB-QL8XPP	CHECKED BY: Jerry	DATE: 2018-03-14
	REV.: B / WC-REV.: A.3	QC: Inspection item	CUSTOMER: ALTW	APPROVED BY: Max	DATE: 2018-03-14

THIS DOCUMENT IS SUBJECT TO CHANGE WITHOUT NOTICE. IT IS CONFIDENTIAL AND A PROPERTY OF Amphenol LTW. DISCLOSURE TO THIRD PARTY HAS TO BE AUTHORIZED BY Amphenol LTW.

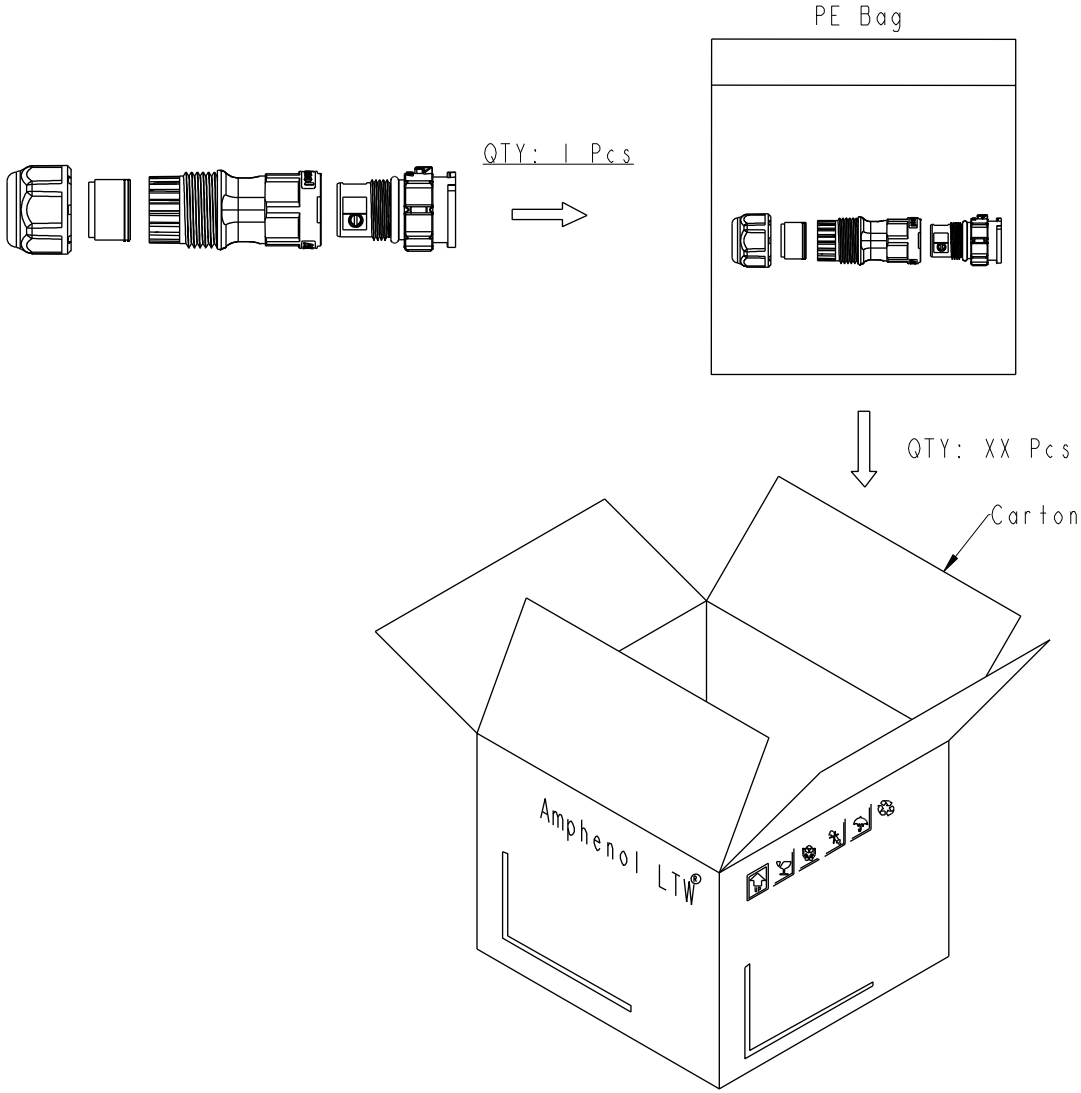

Note:
* One Set Unassembled In One PE Bag.
（每一組未組裝，放置於一個PE袋，並封口，如圖示）
* Label is Attached To PE Bag Front.
（標籤貼在PE袋正面）

UNIT: mm	TITLE: XLOK, C-20A, 02P, CABLE W/O SR M, M, FI SCREWIN, XLOK (B)	Amphenol LTW 安費諾亮泰企業股份有限公司	ITEM NO	DRAWN BY: Mafei	DATE: 2018-03-14
TOLERANCE ±0.5 mm	SCALE: 8:5 / SIZE: A4 / SHEET 2 OF 2		DWG NO: CC-XXBMMB-QL8XPP	CHECKED BY: Jerry	DATE: 2018-03-14
	REV.: B / WC-REV.: A.3	(QC): Inspection item	CUSTOMER: ALTW	APPROVED BY: Max	DATE: 2018-03-14

THIS DOCUMENT IS SUBJECT TO CHANGE WITHOUT NOTICE. IT IS CONFIDENTIAL AND A PROPERTY OF Amphenol LTW. DISCLOSURE TO THIRD PARTY HAS TO BE AUTHORIZED BY Amphenol LTW.

Mouser Electronics

Authorized Distributor

Click to View Pricing, Inventory, Delivery & Lifecycle Information:

Amphenol:

CC-03BMMB-QL8APP CC-03BMMB-QL8MPP CC-03BMMB-QL8SPP CC-03BMMB-QL8LPP