NOTES:

1. MATERIALS OF CONSTRUCTION:
   SHELL, BODY/FLANGE, & CONTACT BODY = BRASS, NICKEL PLATED
   CONTACT PIN = BRASS, GOLD PLATED
   RETAINER RING = STAINLESS STEEL, NATURAL
   INSULATOR = TEFLON PER MIL-P-19468
   GASKET = SILICONE RUBBER, COLOR RED

49000-RFX	REVISIONS				
DRAWING NO.	REV	DESCRIPTION	DATE	ECO	APPR
THIRD ANGLE PROJ.	A	RELEASE TO MFG.	11/28/00	43603	CPM

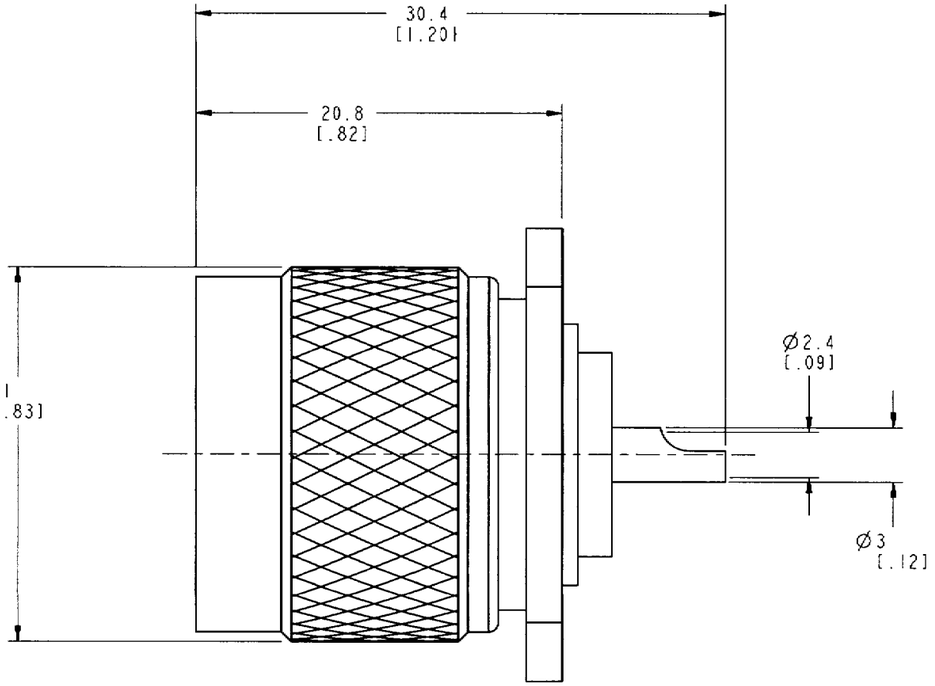

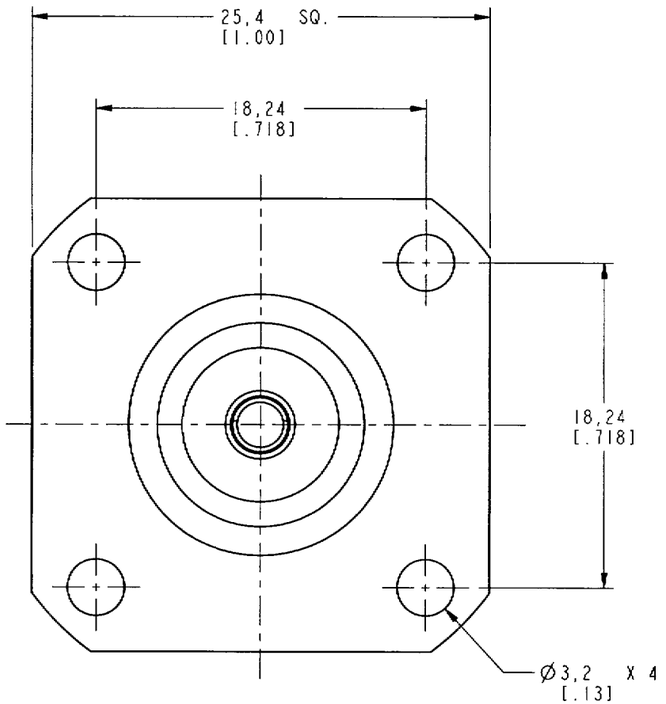

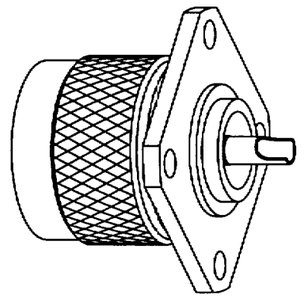
SCALE 1.500

CUSTOMER OUTLINE DRAWING
FOR REFERENCE ONLY

UNLESS OTHERWISE SPECIFIED, DIMENSIONS ARE IN INCHES AND TOLERANCES ARE:
0.5 - 6mm ±0.2mm | 6 - 30mm ±0.4mm | 30 - 120mm ± 0.6mm

NOTICE - These drawings, specifications, or other data (1) are, and remain the property of Amphenol Corp. (2) must be returned upon request; and (3) are confidential and not to be disclosed to any person other than those to whom they are given by Amphenol Corp. The furnishing of these drawings, specifications, or other data by Amphenol Corp., or to any other person to anyone for any purpose is not to be regarded by implication or otherwise in any manner licensing, granting rights or permitting such holder or any other person to manufacture, use or sell any product, process or design, patented or otherwise, that may in any way be related to or disclosed by said drawings, specifications, or other data.

MATERIAL

REFERENCE
GEN# 49000-SRFX_ASSY

DRAWN C. McGRATH	DATE 11/14/00	
ENGINEER T. AUBIN	DATE 11/14/00	
APPROVED	DATE 11/28/00	
CAD FILE I:\N\49000-RFX	CODE ID 74868	DWG SIZE B

TITLE
'N' PANEL
RECEPTACLE PLUG

Amphenol
Amphenol Corporation
Communication and Network
Products Division
Danbury, CT U.S.A. 06810

SCALE: 3.0:1 | SHEET 2 OF 2

DRAWING NO. 49000-RFX | REV A

Mouser Electronics

Authorized Distributor

Click to View Pricing, Inventory, Delivery & Lifecycle Information:

Amphenol:
000-49000-RFX