REV.	ECN NO.	DATE	SIGN	DESCRIPTION
A	Initial Release	2010/03/17	Jessie	Form Rev.01 To A
B	LE3-060089	2010/05/26	Jessie	Modify Note and Shell Plated

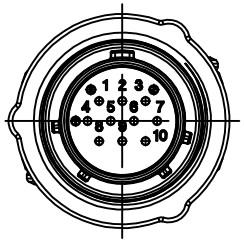

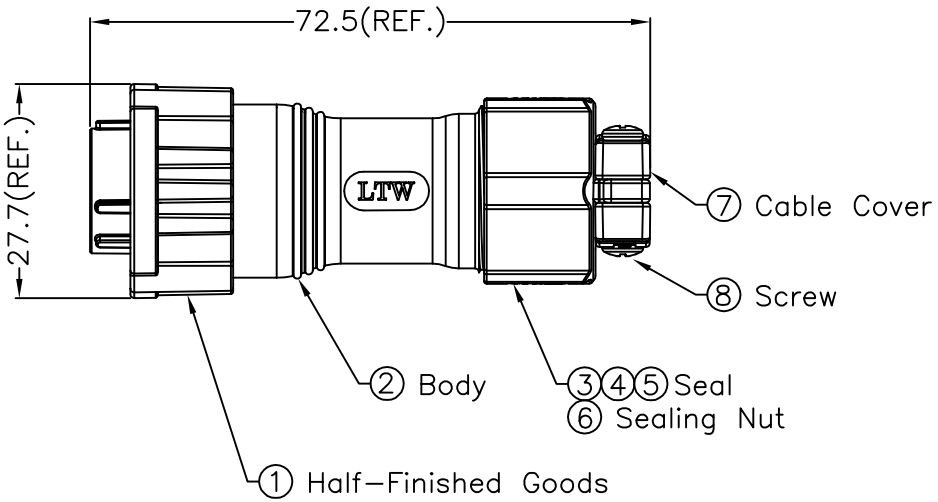

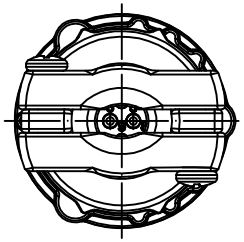

ALTW
CONFIDENTIAL
2010.05.26
R&D DEPT.

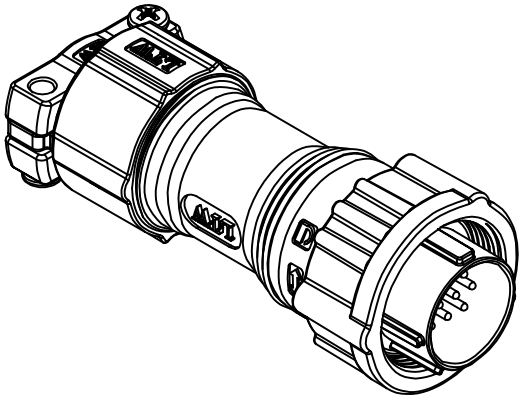

ALTW
DCC. DEPT.
CONFIDENTIAL
2010.06.10
ISSUED

Note:

* ⓠⓒ Important Dimension.
* Waterproof Rate: IP68.

△B IP68: 1M depth of water in 24 Hrs.
（防水等級：IP68 ）
IP68：水深一米測試 24 小時 .

* Cable OD: ø5.5mm~ø12.5mm.
* Gasket: Silicone ,Gray.

△B * Shell: Zinc Alloy ,Ni Plated ,Silver.

* Male Pin: Copper Alloy ,Silver Plated.
* Insulation: Nylon ,Black.

⑨ * One Set Assembled in one PE Bag.

UNIT:mm	TITLE: Circular II Series 10 Pin Assy	Amphenol LTW 安費諾亮泰企業股份有限公司	ITEM NO: LD20-10BFMA-SL8001	DRAWN BY: Jessie	DATE: 2010/05/26
TOLERANCE .X ±0.25 .XX ±0.1 .XXX ±0.05 ANGLES ±1°	SCALE: Free / SHEET: 1 OF 1		DWG NO: LD20-10BFMA-SL8001	CHECKED BY: Jimmy	DATE: 2010/05/27
	REV. B / SIZE A4 / ⓠⓒ :Inspection Item		CUSTOMER: ALTW	APPROVED BY: Win	DATE: 2010/06/01

THIS DOCUMENT IS SUBJECT TO CHANGE WITHOUT NOTICE. IT IS CONFIDENTIAL AND A PROPERTY OF Amphenol LTW. DISCLOSURE TO THIRD PARTY HAS TO BE AUTHORIZED BY Amphenol LTW.

Mouser Electronics

Authorized Distributor

Click to View Pricing, Inventory, Delivery & Lifecycle Information:

Amphenol:

LD20-10BFMA-SL8001