REV.	ECN NO.	DATE	SIGN	DESCRIPTION
B	LEN1860137	2018-06-11	Ouyang	Change the lettering
C	LE31870037	2018-07-09	Ouyang	Update specifications
D		2018-07-23	Ouyang	Update specifications

ALTW
CONFIDENTIAL
2018-07-23
R&D DEPT.

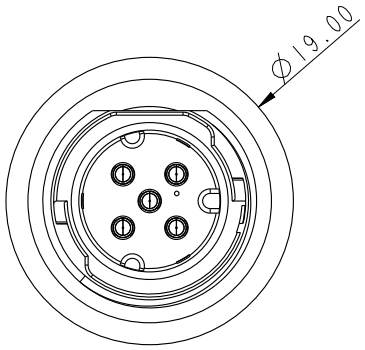

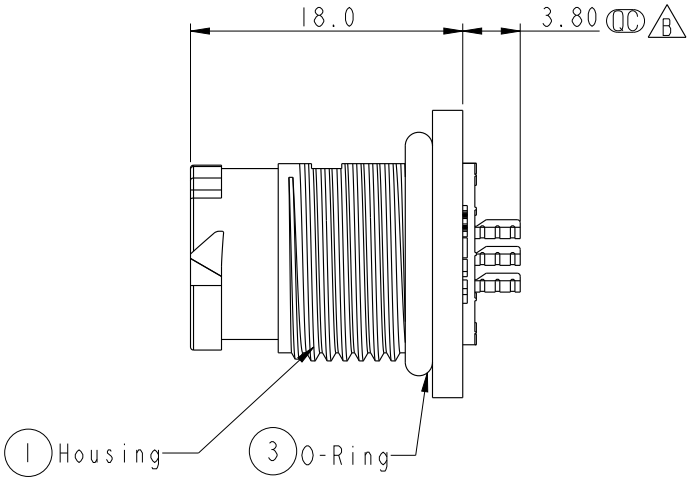

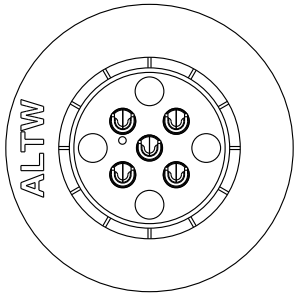

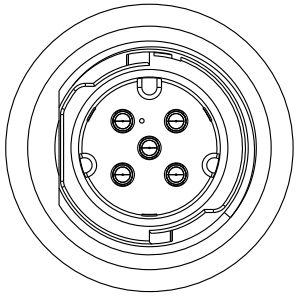

Pin Assignments
Front View

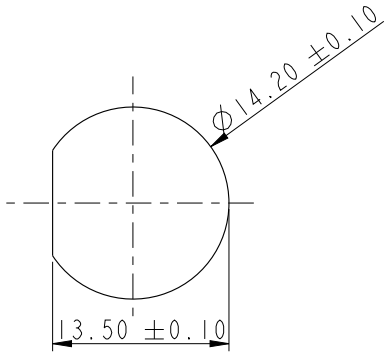

Recommended Panel Cut-out

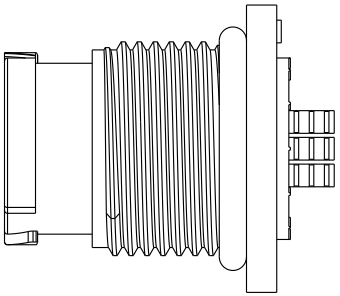

Note: D
* QC Important Dimension To Check.
* Waterproof Rate: IP68
* Flame Class: UL94V-0 (UV Resistance)
* Housing: Nylon+GF, Black
* Male Pin: Copper Alloy, Gold Plated
* Nut: Nylon+GF, Black
* Gasket: Silicone, Gray
* Rated Current: 2~5Pin 5A(300V)
  6~8Pin 2A(30V)
* Use Without Waterproof Cap
  Panel Thickness Max: 4.0mm
* Use With Waterproof Cap
  Panel Thickness Max: 3.0mm

UNIT: mm

TOLERANCE
±0.5mm

TITLE: X Lok A-Size Receptacle Front Fastened M Conn M Pin

SCALE: 1:1 | SIZE: A4 | SHEET 1 OF 2
REV. D | WC-REV. .0 | QC: Inspection item

Amphenol LTW
安費諾亮泰企業股份有限公司

ITEM NO: AX-XXPMMS-QC8001	DRAWN BY: Ouyang	DATE: 2018-07-23
DWG NO: AX-XXPMMS-QC8001	CHECKED BY: Mafei	DATE: 2018-07-23
CUSTOMER: ALTW	APPROVED BY: Jerry	DATE: 2018-07-23

WI0814-03-[illegible]01A1

THIS DOCUMENT IS SUBJECT TO CHANGE WITHOUT NOTICE. IT IS CONFIDENTIAL AND A PROPERTY OF Amphenol LTW. DISCLOSURE TO THIRD PARTY HAS TO BE AUTHORIZED BY Amphenol LTW.

REV.	ECN NO.	DATE	SIGN	DESCRIPTION

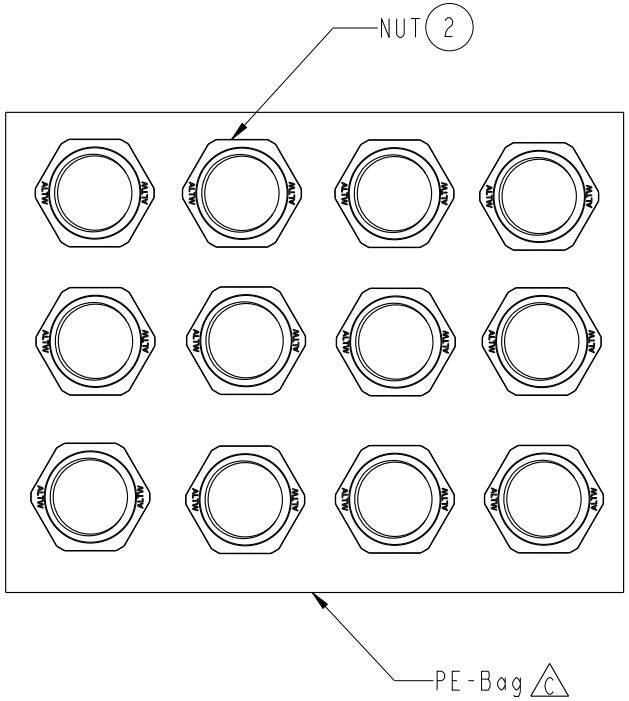

D AX- XX P M M S- Q C 8 0 01

C (AU)2A
(AD)5A

02: 2Pin
03: 3Pin
04: 4Pin
05: 5Pin
06: 6Pin
08: 8Pin

P: Front Fastened

M: Male Connector(公座)

M: Male Pin(公Pin)

8: IP68(防水等級68)

C: Circular

Q: Push Lock

S: Solder Type

C

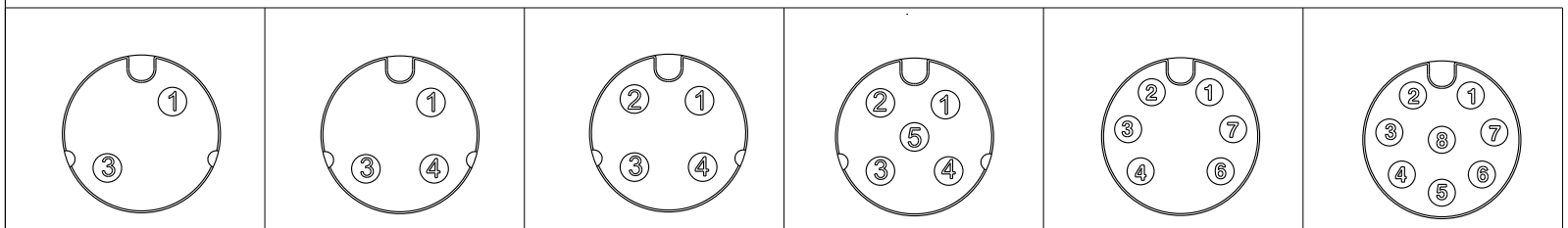

2PIN	3PIN	4PIN	5PIN	6PIN	8PIN
AD-02PMMS-QC8001	AD-03PMMS-QC8001	AD-04PMMS-QC8001	AD-05PMMS-QC8001	AU-06PMMS-QC8001	AU-08PMMS-QC8001

UNIT: mm

TOLERANCE

±0.5mm

TITLE: X Lok A-Size Receptacle Front Fastened M Conn M Pin

SCALE: 1:1 | SIZE: A4 | SHEET 2 OF 2

REV. D | WC-REV. .0 | QC: Inspection item

Amphenol LTW

安費諾亮泰企業股份有限公司

ITEM NO: AX-XXPMMS-QC8001	DRAWN BY: Ouyang	DATE: 2018-07-09
DWG NO: AX-XXPMMS-QC8001	CHECKED BY: Mafei	DATE: 2018-07-09
CUSTOMER: ALTW	APPROVED BY: Jerry	DATE: 2018-07-09

W10814-03-[illegible]01A1

THIS DOCUMENT IS SUBJECT TO CHANGE WITHOUT NOTICE. IT IS CONFIDENTIAL AND A PROPERTY OF Amphenol LTW. DISCLOSURE TO THIRD PARTY HAS TO BE AUTHORIZED BY Amphenol LTW.

Mouser Electronics

Authorized Distributor

Click to View Pricing, Inventory, Delivery & Lifecycle Information:

Amphenol:
AD-05PMMS-QC8001