REV.	ECN NO.	DATE	SIGN	DESCRIPTION
A		2019/03/08	Allen Pan	
B	C191681	2019/09/24	Vicky	Update Wire Tolerance
C	BOMR19110191	2019-11-27	Peng	△C X4

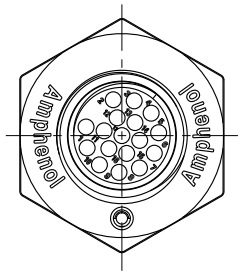

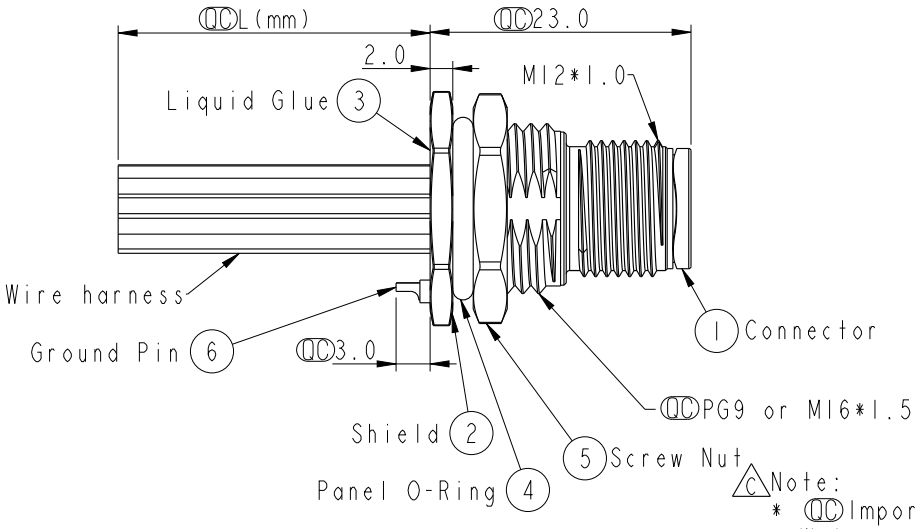

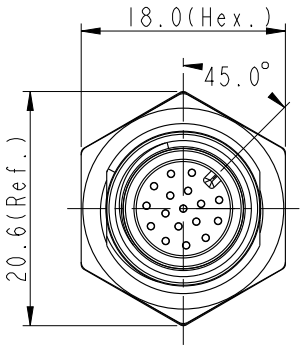

△C Note:
* QC Important Dimension.
* Waterproof Rate: IP68, IP69K.
* Connector: Nylon+GF,Black.
* Male Pin: Copper Alloy, Gold Plated.
* Shield:Zinc Alloy,Nickel Plated.
* Screw Nut: Zinc Alloy, Nickel Plated.
* Panel O-Ring:Viton,Black.
* Wire harness: UL1061
* Rated Voltage: 3 & 4Pin 250V dc. or ac.
  5Pin 60V dc. or ac.
  6~12Pin,17Pin 30V dc. or ac.
* Rated Current: 3~5Pin 4A
  6~8Pin 2A
  10~12Pin,17Pin 1.5A
* Operating Temperature: -25~85°C
* For Panel Thickness Max 4.5mm.
* Nut Torque:4-6 Kgf.cm.
* Wire harness Tolerance: 150~300 ±15mm
  301~1000 ±20mm
  △B Over1000 +50/-0mm

(PG9)

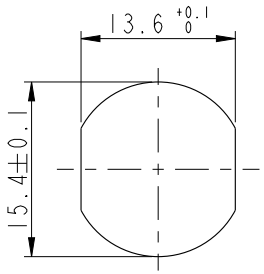

Recommended Panel Cut-Out

(M16*1.5)

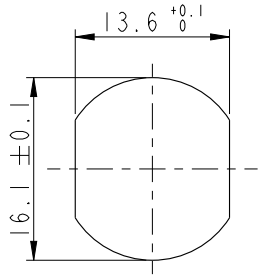

Recommended Panel Cut-Out

UNIT:mm

TOLERANCE
.X ±0.25
.XX ±0.1
.XXX ±0.05
ANGLES ±1°

TITLE: M12 A-Code Male Conn. Panel Front With Wire harness Shielded

SCALE	SIZE	SHEET	REV.	WC-REV.
3:2	A4	1 OF 2	C	A.1

QC: Inspection item

Amphenol LTW
安費諾亮泰企業股份有限公司

ITEM NO	DRAWN BY	DATE
	Vicky	2019-09-24
DWG NO: MSAS-XXPMMX-SF8XXX	CHECKED BY: Rita	DATE: 2019-09-24
CUSTOMER: ALTW	APPROVED BY: Max	DATE: 2019-09-24

WI0814-03-RM01A2

THIS DOCUMENT IS SUBJECT TO CHANGE WITHOUT NOTICE. IT IS CONFIDENTIAL AND A PROPERTY OF Amphenol LTW. DISCLOSURE TO THIRD PARTY HAS TO BE AUTHORIZED BY Amphenol LTW.

M SAS - XX P M M X - S F 8 X XX (B)

SAS:A-Code Shielded
03:3Pin
04:4Pin
05:5Pin
06:6Pin
08:8Pin
10:10Pin
12:12Pin
17:17Pin (C)
P:Panel(板端)

M:Male Connector(公座)

M:Male Pin(公Pin)

C:Crimp Type(打端式)
S:Solder Type(焊接式)

15:150mm
20:200mm
∫
95:950mm
Cable Pitch Unit:50mm

A0:1000mm
∫
A5:1500mm
Cable Pitch Unit:100mm
Wire Length(L):150~1500mm

B:PG9
C:M16*1.5

8:IP68/69K(防水等級68/69K)

F:Front Fasten(前鎖式/Enclosure Rear Mount)

S:Screw(螺紋式)

(C)

Contacts	Wire harness	AWG	Item No.
17P	UL1061	26	MSAS-17PMMC-SF8CXX
12P			MSAS-12PMMS-SF8CXX
10P			MSAS-10PMMS-SF8CXX
8P		24	MSAS-08PMMS-SF8CXX
6P			MSAS-06PMMS-SF8CXX
5P		22	MSAS-05PMMC-SF8CXX
4P			MSAS-04PMMC-SF8CXX
3P			MSAS-03PMMC-SF8CXX
17P		26	MSAS-17PMMC-SF8BXX
12P			MSAS-12PMMS-SF8BXX
10P			MSAS-10PMMS-SF8BXX
8P		24	MSAS-08PMMS-SF8BXX
6P			MSAS-06PMMS-SF8BXX
5P		22	MSAS-05PMMC-SF8BXX
4P			MSAS-04PMMC-SF8BXX
3P			MSAS-03PMMC-SF8BXX

(C)

Pin #	Wire		Pin #	Wire		Pin #	Wire		Pin #	Wire		Pin #	Wire		Pin #	Wire	
5	--		5	--		5	Gray	灰	8	--		8	Red	紅	12	--	
4	Black	黑	4	Black	黑	4	Black	黑	7	Blue	藍	7	Blue	藍	11	--	
3	Blue	藍	3	Blue	藍	3	Blue	藍	6	Pink	粉	6	Pink	粉	10	Violet	紫
2	--		2	White	白	2	White	白	5	--		5	Gray	灰	9	Black	黑
1	Brown	棕	1	Brown	棕	1	Brown	棕	4	Yellow	黃	4	Yellow	黃	8	Red	紅
									3	Green	綠	3	Green	綠	7	Blue	藍
									2	Brown	棕	2	Brown	棕	6	Pink	粉
									1	White	白	1	White	白	5	Gray	灰
															4	Yellow	黃
															3	Green	綠
															2	Brown	棕
															1	White	白

Pin #	Wire		Pin #	Wire	
12	Red/Blue	紅/藍	17	White/Gray	白/灰
11	Gray/Pink	灰/粉	16	Yellow/Brown	黃/棕
10	Violet	紫	15	White/Yellow	白/黃
9	Black	黑	14	Brown/Green	棕/綠
8	Red	紅	13	White/Green	白/綠
7	Blue	藍	12	Red/Blue	紅/藍
6	Pink	粉	11	Gray/Pink	灰/粉
5	Gray	灰	10	Violet	紫
4	Yellow	黃	9	Red	紅
3	Green	綠	8	Gray	灰
2	Brown	棕	7	Black	黑
1	White	白	6	Yellow	黃
			5	Pink	粉
			4	Green	綠
			3	White	白
			2	Blue	藍
			1	Brown	棕

Pin Out

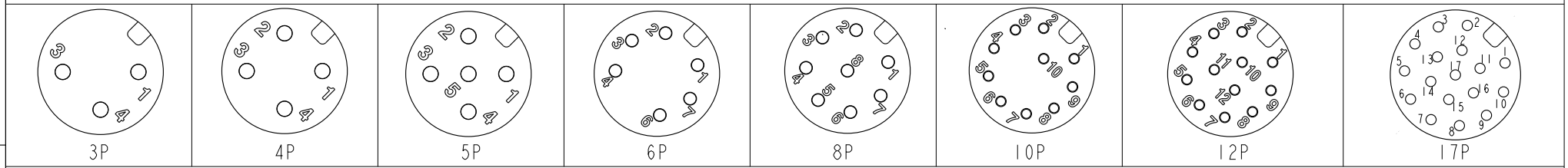

Pin Assignments Front View

UNIT:mm

TOLERANCE
.X ±0.25
.XX ±0.1
.XXX ±0.05
ANGLES ±1°

TITLE: M12 A-Code Male Conn. Panel Front With Wire harness Shielded

SCALE: 3:2 | SIZE: A4 | SHEET 2 OF 2
REV.: C | WC-REV.: A.1 | (QC):Inspection item

Amphenol LTW
安費諾亮泰企業股份有限公司

ITEM NO	DRAWN BY: Vicky	DATE: 2019-09-24
DWG NO: MSAS-XXPMMX-SF8XXX	CHECKED BY: Rita	DATE: 2019-09-24
CUSTOMER: ALTW	APPROVED BY: Max	DATE: 2019-09-24

W10814-03-[redacted]01A2

THIS DOCUMENT IS SUBJECT TO CHANGE WITHOUT NOTICE. IT IS CONFIDENTIAL AND A PROPERTY OF Amphenol LTW. DISCLOSURE TO THIRD PARTY HAS TO BE AUTHORIZED BY Amphenol LTW.

Mouser Electronics

Authorized Distributor

Click to View Pricing, Inventory, Delivery & Lifecycle Information:

Amphenol:

MSAS-17PMMC-SF8B20 MSAS-17PMMC-SF8C20