REVISIONS					
REV	ECO	DESCRIPTION	DATE	BY	APPR
A1	--	RELEASE NEW DRAWING	25DEC17	RIMON	TOMMY
A2	C0870S	Change the appearance of the retaining ring	27JUN18	KASOON	TOMMY

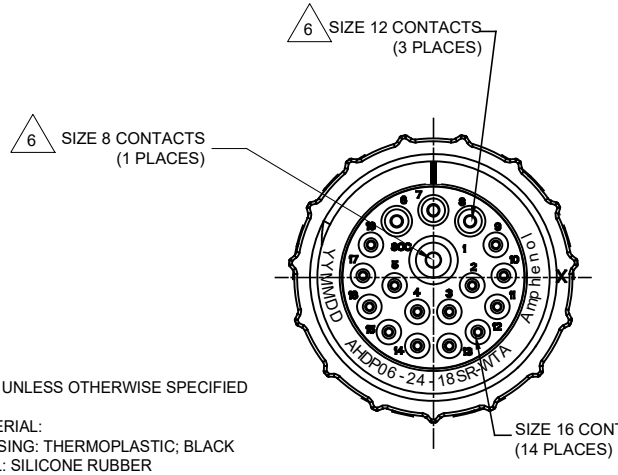

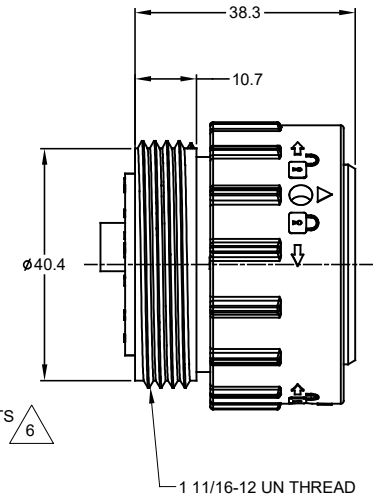

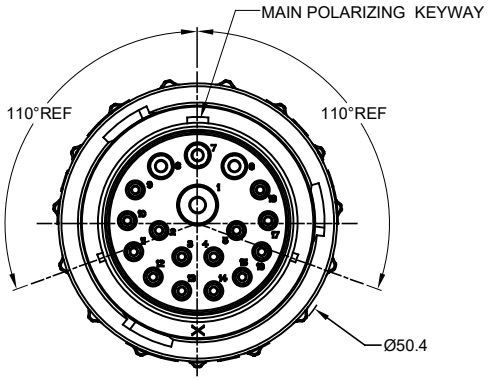

NOTES: UNLESS OTHERWISE SPECIFIED

1. MATERIAL:
   HOUSING: THERMOPLASTIC; BLACK
   SEAL: SILICONE RUBBER

2. MODIFICATIONS: THREADED ADAPTER;
   REDUCED DIA. WIRE SEAL

3. SPECIFICATIONS:
   3.1 OPERATING TEMPERATURE: -55℃ TO +125℃.
   3.2 DIELECTRIC WITHSTANDING VOLTAGE: LESS THAN 2 MILLIAMPS CURRENT LEAKAGE @ 1500 VOLTS AC.
   3.3 INSULATION RESISTANCE: 1000 MEGOHM MIN @ 25℃.
   3.4 MOISTURE RESISTANCE: IP67&IP69K (MATED CONDITION).
   3.5 MATING CYCLE DURABILITY: 100 CYCLES
   3.6 RoHS COMPLIANT

4. MATING PART: AHDP04-24-18P* (* = SEAL TYPE)

5. ALL DIMENSIONS ARE FOR REFERENCE USE ONLY.

6 CONTACT SIZE AND WIRE RANGE:

CONTACT SIZE	MIN. INSUL O.D.	MAX. INSUL O.D.	TYPICAL WIRE RANGE	CURRENT RATING
08	3.43 mm (.135in)	5.59 mm (.220 in)	8-10 AWG	60 AMPS
12	2.46 mm (.097 in)	4.01 mm (.158 in)	10-14 AWG	25 AMPS
16	1.35 mm (.053in)	3.05 mm (.120 in)	14-20 AWG	13 AMPS

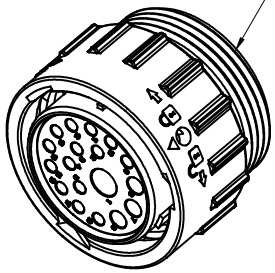

QUANTITY	PART NUMBER	DESCRIPTION	ITEM
	AHDP06-24-18SR-WTA		

MATERIALS LIST

UNLESS OTHERWISE SPECIFIED
1) All dimensions are in metric(mm).
2) Tolerances are as follows:
1 PL DEC ±0.30
2 PL DEC ±0.15
3 PL DEC ±0.08
Fractions ±1/64
Angles ±1°
3) Note reference = A

MATERIAL SPECIFICATIONS:

PROCESS SPECIFICATIONS:

NEXT ASS'Y:

SIGNATURES		DATE
DRAWN:	KASOON	27JUN18
CHECKED:	ORION.LI	27JUN18
ENGINEER:		
APPROVAL:	TOMMY.XIE	27JUN18
CUSTOMER:		

THIS DRAWING IS SUPPLIED FOR INFORMATION ONLY. DESIGN FEATURES, SPECIFICATIONS AND PERFORMANCE DATA SHOWN HEREON ARE THE PROPERTY OF THE AMPHENOL CORPORATION. NO RIGHTS OF REPRODUCTION ARE IMPLIED. ALL DIMENSIONS ARE SUBJECT TO NORMAL MANUFACTURING VARIATIONS.

Amphenol

Sine Systems - www.amphenol-sine.com
44724 Morley Drive
Clinton Township, MI 48036

PLUG,24-18 POS,SOCKET CONTACT
REDUCED DIA. SEAL, AHDP SERIES

SIZE B | TYPE C- | DWG NO: AHDP06-24-18SR-WTA | REVISION A2

SCALE: NONE | SHEET 1 OF 1

TITLE: PLUG,24-18 POS,SOCKET CONT.,REDUCED DIA. SEAL, AHDP
DWG NO. AHDP06-24-18SR-WTA
REV: A2
SH: 1
OF: 1

Mouser Electronics

Authorized Distributor

Click to View Pricing, Inventory, Delivery & Lifecycle Information:

Amphenol:
AHDP06-24-18SR-WTA