REVISIONS					
REV	ECO	DESCRIPTION	DATE	BY	APPR
A3	--	RELEASE NEW DWG FORMAT	04SEP13	DRP	
A4	--	UPDATE DRAWING	06/JAN/20	ROOKIE	TOMMY

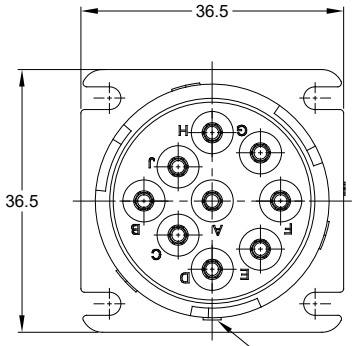

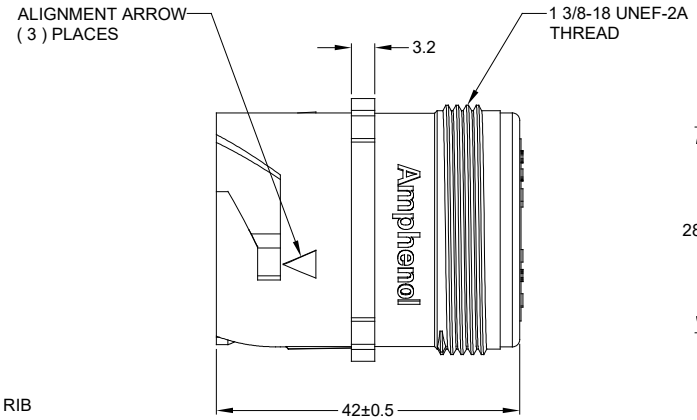

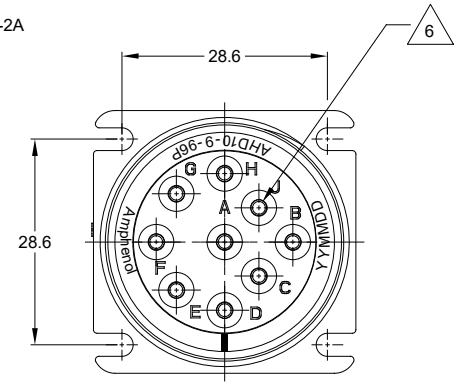

NOTES: UNLESS OTHERWISE SPECIFIED

1. MATERIAL:
   HOUSING: THERMOPLASTIC; GREY
   SEAL: SILICONE RUBBER

2. MODIFICATIONS: N/A

3. SPECIFICATIONS:
   3.1 CURRENT RATING: 13 AMPS
   3.2 OPERATING TEMPERATURE: -55°C TO +125°C.
   3.3 DIELECTRIC WITHSTANDING VOLTAGE: LESS THAN 2 MILLIAMPS CURRENT LEAKAGE @ 1500 VOLTS AC.
   3.4 INSULATION RESISTANCE: 1000 MEGOHM MIN @ 25°C.
   3.5 MOISTURE RESISTANCE: IP67 (MATED CONDITION).
   3.6 MATING CYCLE DURABILITY: 100 CYCLES
   3.7 RoHS COMPLIANT

4. MATING PART: AHD16-9-96S*
   (* = AVAILABLE MODIFICATIONS)

5. ALL DIMENSIONS ARE FOR REFERENCE USE ONLY.

6 CONTACT SIZE AND WIRE RANGE:

CONTACT SIZE	MIN. INSUL O.D.	MAX. INSUL O.D.	WIRE RANGE
16	2.54 mm (.100 in)	3.81 mm (.150 in)	14 - 20 AWG

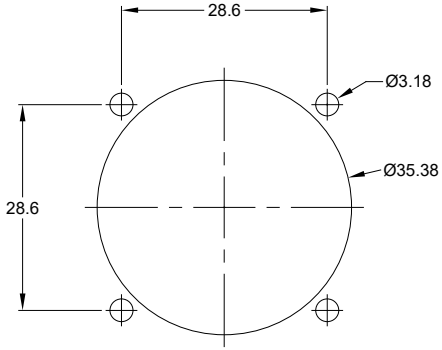

MOUNTING HOLE DETAIL

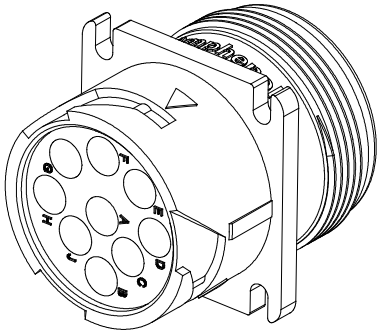

QUANTITY	PART NUMBER	DESCRIPTION	ITEM
	AHD10-9-96P		

MATERIALS LIST

UNLESS OTHERWISE SPECIFIED
1) All dimensions are in metric(mm).
2) Tolerances are as follows:
1 PL DEC ±0.30 | Fractions ±1/64
2 PL DEC ±0.15 | Angles ±1°
3 PL DEC ±0.08
3) Note reference = X

MATERIAL SPECIFICATIONS:

PROCESS SPECIFICATIONS:

NEXT ASSY:

SIGNATURES		DATE
DRAWN:	ROOKIE	06/JAN/20
CHECKED:	ORION	06/JAN/20
ENGINEER:		
APPROVAL:	TOMMY	06/JAN/20
CUSTOMER:		

THIS DRAWING IS SUPPLIED FOR INFORMATION ONLY. DESIGN FEATURES, SPECIFICATIONS AND PERFORMANCE DATA SHOWN HEREON ARE THE PROPERTY OF THE AMPHENOL CORPORATION. NO RIGHTS OF REPRODUCTION ARE IMPLIED. ALL DIMENSIONS ARE SUBJECT TO NORMAL MANUFACTURING VARIATIONS.

Amphenol
Sine Systems - www.amphenol-sine.com
44724 Morley Drive
Clinton Township, MI 48036

RECEPTACLE, 9 POSITION,
SQUARE FLANGE, AHD SERIES

SIZE	TYPE	DWG NO:	REVISION
B	C-	AHD10-9-96P	A4

SCALE: NONE SHEET 1 OF 1

TITLE: RECEPTACLE, 9 POSITION, SQUARE FLANGE, AHD SERIES
DWG NO: AHD10-9-96P
REV: A4
SH: 1
OF: 1

Mouser Electronics

Authorized Distributor

Click to View Pricing, Inventory, Delivery & Lifecycle Information:

Amphenol:
AHD10-9-96P