REV.	ECN NO.	DATE	SIGN	DESCRIPTION
B	LEN-910192	2009/01/07	Ivan Lin	Change rev. to ECN note
C	LEN-030191	2010/03/24	Li Xiu Zhi	Change View
D	C200518	2020/04/25	Peng	D XI

C

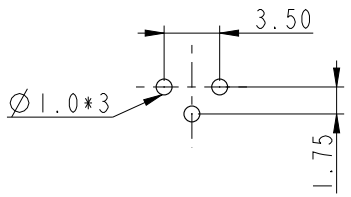

B PCB Layout

B

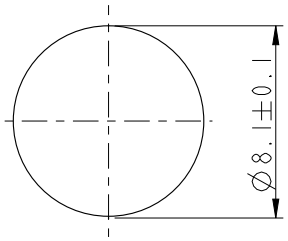

Recommended Panel Cut-Out

C

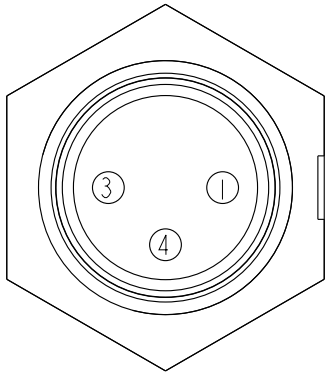

Pin Assignments
Front View

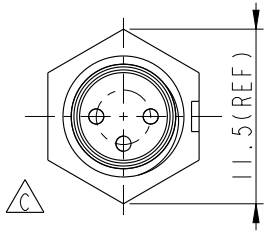

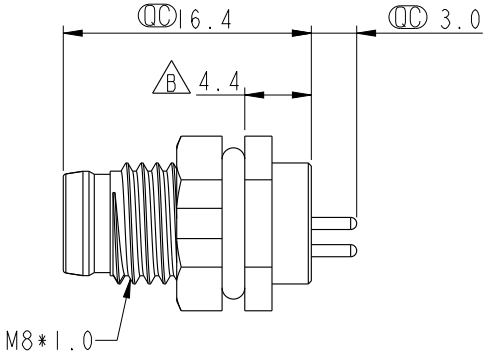

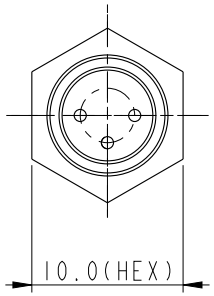

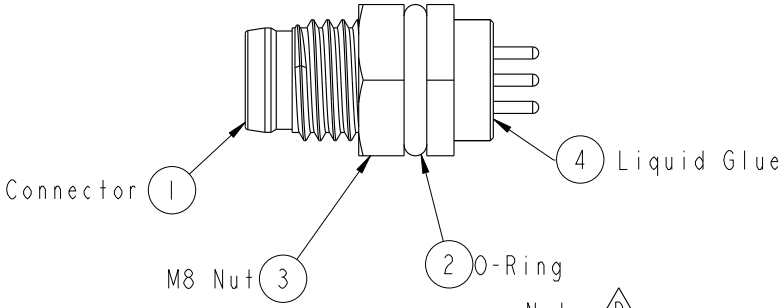

Note: D
* QC Important Dimension To Check.
* Waterproof Rate: IP67
* Housing:Nylon+GF, Black
* Male Pin: Copper Alloy, Gold Plated
* M8 Nut:Nylon+GF, Black
* O-Ring:EPDM ,Black
* Panel Thickness For Snap-in Type Max 3.0mm
* Panel Thickness For Screw Type Max 1.9mm

UNIT:mm

TOLERANCE
.X ±0.25
.XX ±0.1
.XXX ±0.05
ANGLES ±1°

TITLE: B M8 Conn Panel Screw 3P M Conn M Pin

SCALE 2:1 | SIZE A4 | SHEET 1 OF 1
REV. D | WC-REV. A.4 | QC: Inspection item

Amphenol LTW
安費諾亮泰企業股份有限公司

ITEM NO 8P-03PMMP-SF7001	DRAWN BY Li Xiu Zhi	DATE 2010-03-24
DWG NO 8P-03PMMP-SF7001	CHECKED BY Tina	DATE 2010-03-24
CUSTOMER ALTW	APPROVED BY Can	DATE 2010-03-24

W10814-03-[redacted]01A2

THIS DOCUMENT IS SUBJECT TO CHANGE WITHOUT NOTICE. IT IS CONFIDENTIAL AND A PROPERTY OF Amphenol LTW. DISCLOSURE TO THIRD PARTY HAS TO BE AUTHORIZED BY Amphenol LTW.

Mouser Electronics

Authorized Distributor

Click to View Pricing, Inventory, Delivery & Lifecycle Information:

Amphenol:
8P-03PMMP-SF7001