REV.	ECN NO.	DATE	SIGN	DESCRIPTION

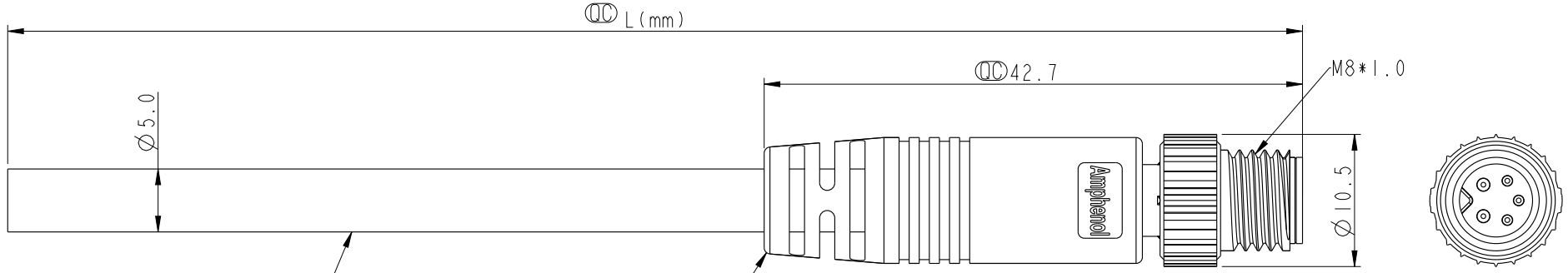

ALTW DCC. DEPT. CONFIDENTIAL 2014.03.06 ISSUED

ALTW CONFIDENTIAL 2014-01-09 R&D DEPT.

8H-05AMMM-SL7AXX

XX: 01~99Meters
01: 01Meter
02: 02Meter
:
99: 99Meters
Cable Length(L): 01~99Meters

Note:
* QC Important Dimension.
* Waterproof Rate: IP67.
* Connector: PU, Black.
* Male Pin: Copper Alloy, Gold Plated.
* Screw Nut: Zinc Alloy, Nickel Plated.
* Cable: UL2464 24AWG*5C+Talcum, PVC Jacket, UV Resistant, OD=5.0, Black.
* Cable Length Tolerance: 01M: ±40mm
  02~05M: ±60mm
  06~10M: ±100mm
  11~30M: ±200mm
  31~99M: ±500mm

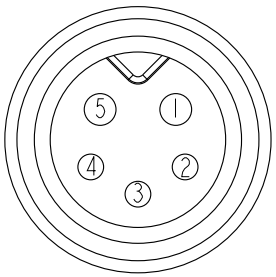

Pin Assignments
Front View

Conn. Pin Out	Wire Color
5	Yellow 黃
4	Orange 橘
3	Red 紅
2	Brown 棕
1	Black 黑

UNIT: mm

TOLERANCE ±0.5 mm

TITLE: M8 2+3Pin Cable M Conn. M Pin

SCALE: 2:1 | SIZE: A4 | SHEET 1 OF 1

REV. A | WC-REV. A.2 | QC: Inspection item

Amphenol LTW
安費諾亮泰企業股份有限公司

ITEM NO	DRAWN BY: Mila	DATE: 2014-01-09
DWG NO: 8H-05AMMM-SL7AXX	CHECKED BY: Jimmy	DATE: 2014-01-09
CUSTOMER: ALTW	APPROVED BY: Jerry	DATE: 2014-01-09

FMW10702-01-02A1

THIS DOCUMENT IS SUBJECT TO CHANGE WITHOUT NOTICE. IT IS CONFIDENTIAL AND A PROPERTY OF Amphenol LTW. DISCLOSURE TO THIRD PARTY HAS TO BE AUTHORIZED BY Amphenol LTW.

Mouser Electronics

Authorized Distributor

Click to View Pricing, Inventory, Delivery & Lifecycle Information:

Amphenol:
8H-05AMMM-SL7A01