ROHS COMPLIANT

PRODUCT DATA DRAWING

REVISION HISTORY			
REV	DESCRIPTION	DATE	APPROVED
E	DCN 39397	09/12	STW

MATERIAL:

BODY, PRESS CAP & COUPLING NUT:	STAINLESS STEEL PER AMS-5640, ALLOY UNS S30300, TYPE 1
LOCK RING:	PHOSPHOR BRONZE
CONTACT, INSERT & END CAP	BRASS PER ASTM B16, ALLOY UNS No. C36000
INSULATOR:	PTFE PER ASTM D1710, TYPE I, GRADE 1, CLASS B
GASKET:	SILICONE RUBBER PER A-A-59588, CLASS 2B, GRADE 60/70
RESISTOR ELEMENT:	ALUMINA SUBSTRATE WITH NICHROME RESISTOR

FINISH:

BODY, PRESS CAP & COUPLING NUT:	PASSIVATED PER AMS-2700
CONTACT:	.000050" MIN GOLD OVER .000100" MIN NICKEL

PERFORMANCE:

IMPEDANCE:	50 OHMS
FREQ. RANGE:	DC TO 18.0 GHz
VSWR:	1.05 + .010f(GHz), DC TO 18.0 GHz
OPERATING TEMP.:	-55°C TO +125°C
AVG. POWER:	1 WATT (POWER INPUT DERATED LINEARLY FROM 25°C TO .5 WATTS AT 125°C)
PEAK POWER:	50 WATTS (PEAK POWER FOR A DUTY CYCLE OF 5 X10-4 MAXIMUM PULSE DURATION OF 5 MICROSECONDS)
CONNECTOR DURABILITY:	500 CYCLES
ENGAGEMENT/ DISENGAGEMENT:	2.0 IN-LBS

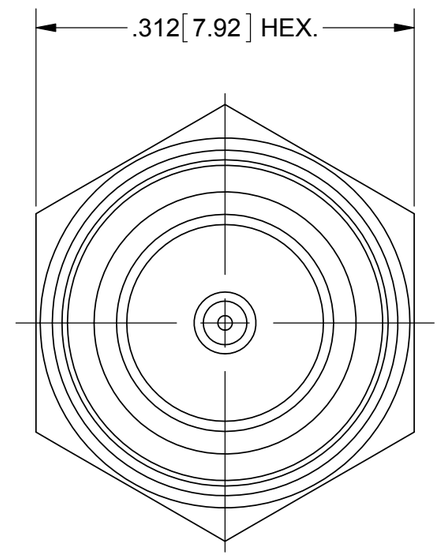

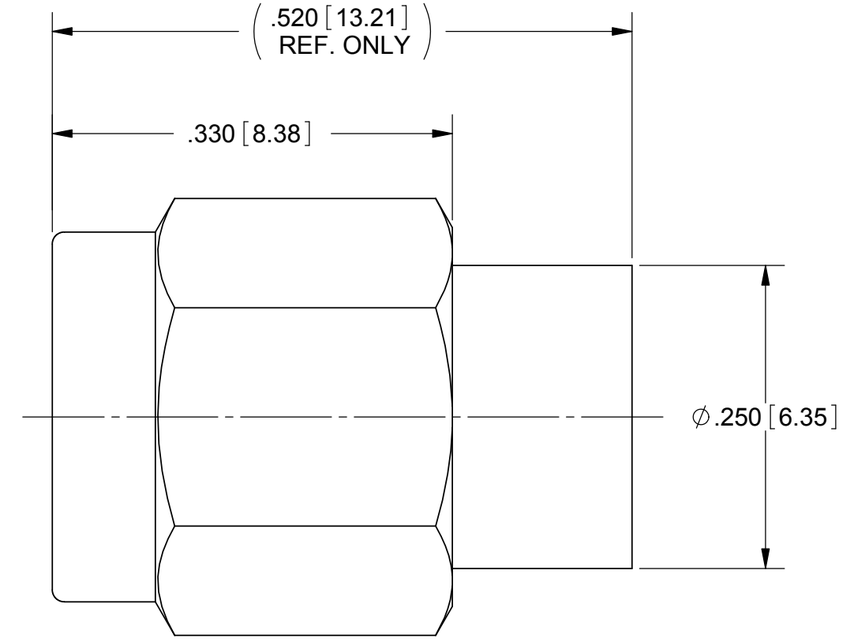

MATERIAL: SEE NOTES	DIMENSIONS ARE IN INCHES TOLERANCES: FRACTIONAL: ±1/64 ANGULAR: X° ±1°0' X°X' ±15' DECIMAL: .X ±.030 .XX ±.010 .XXX ±.005 INTERPRET DIMENSIONS AND TOLERANCES PER ASME Y14.5M - 1994	UNLESS OTHERWISE SPECIFIED 1) ALL DIMENSIONS ARE IN INCHES [MILLIMETERS] 2) ALL DIMENSIONS ARE AFTER PLATING. 3) BREAK CORNERS & EDGES .005 R. MAX. 4) CHAM. 1ST & LAST THREADS. 5) SURFACE ROUGHNESS 63₳ MIL-STD-10. 6) DIA.'S ON COMMON CENTERS TO BE CONCENTRIC WITHIN .005 T.I.R. 7) REMOVE ALL BURRS	**SV Microwave, Inc.** 2400 Centrepark West Drive, Suite 100 West Palm Beach, FL 33409
FINISH: SEE NOTES			TITLE: SMA PLUG TERMINATION
SURFACE AREA: N/A			
PROPRIETARY THE INFORMATION CONTAINED IN THIS DRAWING IS THE SOLE PROPERTY OF SV MICROWAVE, INC. ANY REPRODUCTION IN PART OR AS A WHOLE WITHOUT THE WRITTEN PERMISSION OF SV MICROWAVE, INC IS PROHIBITED.	THIRD ANGLE PROJECTION	DRAWN: BRT 12/05/03	SIZE B · CAGE CODE 95077 · DWG. NO. SF8018-6005
		CHECKED: STW 06/30/11	
		APPROVED: BRT 12/05/03	SCALE: 8:1 · SHEET 1 OF 1

Mouser Electronics

Authorized Distributor

Click to View Pricing, Inventory, Delivery & Lifecycle Information:

Amphenol:

SF8018-6005 1378-0003