ROHS COMPLIANT

PRODUCT DATA DRAWING

REVISION HISTORY			
REV	DESCRIPTION	DATE	APPROVED
B	REV. DCN 48043	10/23/18	STW

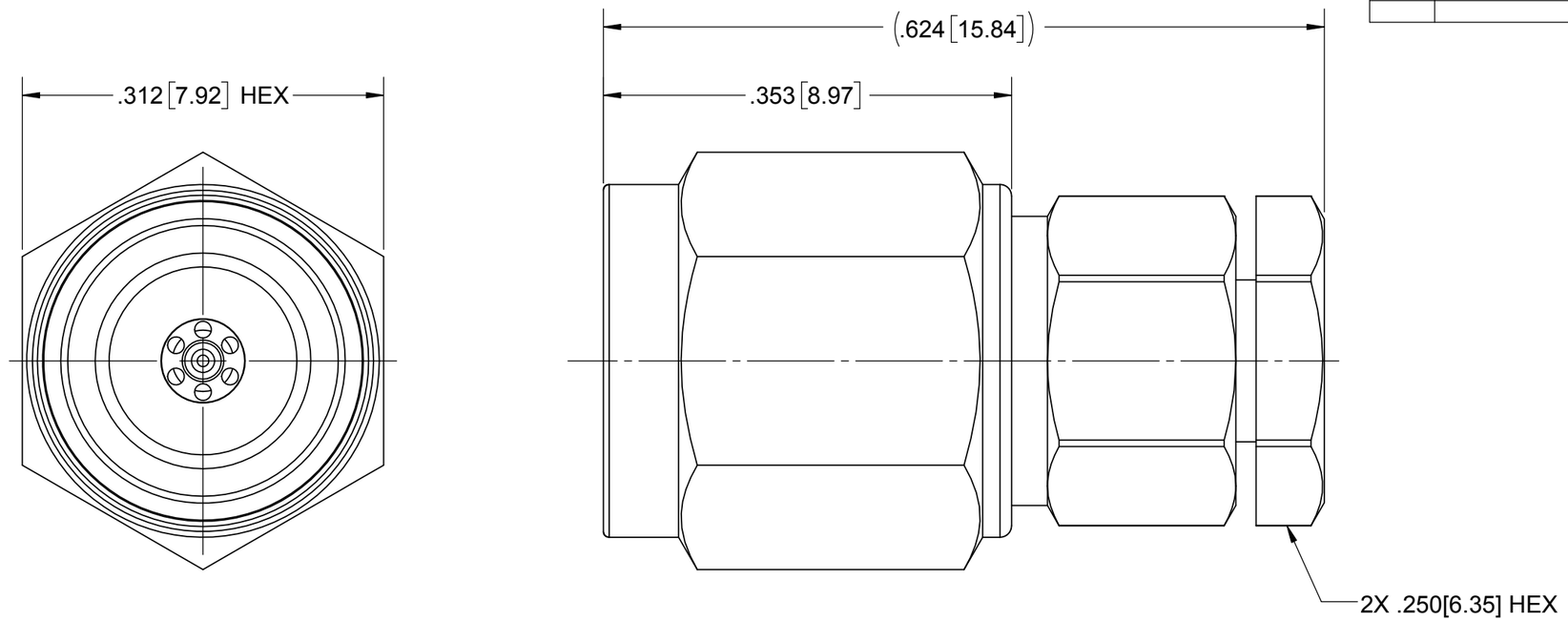

MATERIAL:

BODY, CLAMP NUT, COUPLING NUT & FERRULE: STAINLESS STEEL PER AMS-5640, ALLOY UNS S30300, TYPE 1 OR ASTM A582, TYPE 303, CONDITION A.

CONTACT: BERYLLIUM COPPER PER ASTM B196, ALLOY No. UNS C17300, TD04.

LOCK RING: BERYLLIUM COPPER PER ASTM B194, B196 OR B197 ALLOY No. UNS C17200 OR C17300.

INSULATOR: PEI (ULTEM 1000) PER ASTM D2505.

GASKET: SILICONE RUBBER PER A-A-59588, CLASS 2B, GRADE 60/70.

FINISH:

CONTACTS & FERRULE: GOLD PER ASTM B 488, TYPE II, CODE C, CLASS 1.27 OVER NICKEL PER AMS-QQ-N-290, CLASS 1, .00005" MIN.

BODY, CLAMP NUT & COUPLING NUT: PASSIVATED PER AMS 2700

PERFORMANCE:

IMPEDANCE: 50 OHMS
FREQ. RANGE: DC TO 65.0 GHz
VSWR: 1.33:1 DC TO 65.0 GHz
INSERTION LOSS: .03 X SQRT F(F IN GHz)
DWV: 500 VRMS
OPERATING TEMP.: -55°C TO +125°C

ENGAGEMENT/ DISENGAGEMENT: 2 IN-LBS

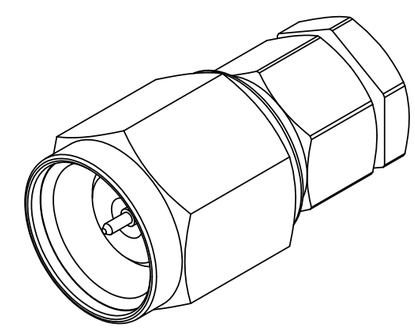

MATERIAL: SEE NOTES
FINISH: SEE NOTES
SURFACE AREA: N/A

PROPRIETARY

THE INFORMATION CONTAINED IN THIS DRAWING IS THE SOLE PROPERTY OF SV MICROWAVE, INC. ANY REPRODUCTION IN PART OR AS A WHOLE WITHOUT THE WRITTEN PERMISSION OF SV MICROWAVE, INC IS PROHIBITED.

DIMENSIONS ARE IN INCHES TOLERANCES:
FRACTIONAL: ±1/64 ANGULAR: X° ±1°0' X°X' ±15'
DECIMAL: .X ±.030 .XX ±.010 .XXX ±.005

INTERPRET DIMENSIONS AND TOLERANCES PER ASME Y14.5M - 1994

THIRD ANGLE PROJECTION

UNLESS OTHERWISE SPECIFIED
1) ALL DIMENSIONS ARE IN INCHES [MILLIMETERS]
2) ALL DIMENSIONS ARE AFTER PLATING.
3) BREAK CORNERS & EDGES .005 R. MAX.
4) CHAM. 1ST & LAST THREADS.
5) SURFACE ROUGHNESS 63 MIL-STD-10.
6) DIA.'S ON COMMON CENTERS TO BE CONCENTRIC WITHIN .005 T.I.R.
7) REMOVE ALL BURRS

DRAWN:	JMC	10/23/18
CHECKED:	STW	10/23/18
APPROVED:	STW	10/23/18

Amphenol SV MICROWAVE
www.svmicrowave.com

TITLE: 1.85MM PLUG FOR Ø.047 CABLE

SIZE B | DWG. NO. SF3311-60002

SCALE: 8:1 | SHEET 1 OF 1

Mouser Electronics

Authorized Distributor

Click to View Pricing, Inventory, Delivery & Lifecycle Information:

Amphenol:
SF3311-60002