REV.	ECN NO.	DATE	SIGN	DESCRIPTION
B	LEN1580235~246	2015/08/10	Feng_Li	Add Black PVC Cable
C	LEN1680704~721	2016/08/13	Yulong_wang	Add 6Pin & IP69K.

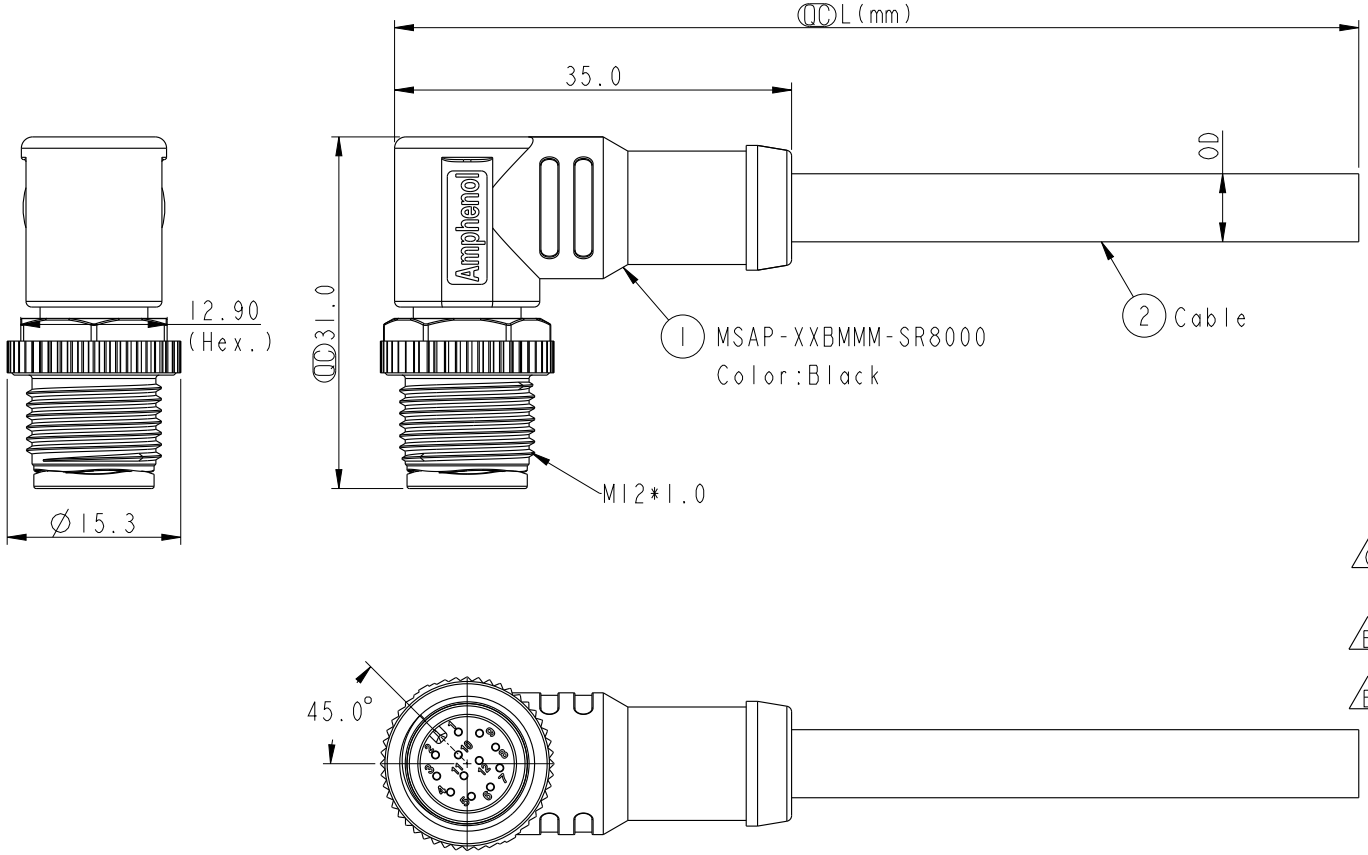

ALTW DCC. DEPT. CONFIDENTIAL 2016.08.18 ISSUED

ALTW CONFIDENTIAL 2016-08-13 R&D DEPT.

Notes:
* QC Important Dimension.
C * Waterproof Rate: IP68, IP69K.
* Connector: PU+GF,Black.
* Male Pin: Copper Alloy, Gold Plated.
B * Screw Nut:Nylon,Black..
* Outer Mold: PU,Black.
B * Cable: (A) UL2517,PVC Jacket,Yellow.
(B) UL20549,PUR Jacket,Black.
(D) UL2517,PVC Jacket,Black.
* Rated Voltage: 3 & 4Pin 250V dc. or ac.
5Pin 60V dc. or ac.
6~12Pin 30V dc. or ac.
* Rated Current: 3~5Pin 4A
6~8Pin 2A
10~12Pin 1.5A
* Operating Temperature: -25~85°C
* Cable Length Tolerance: 01M:±40mm
02M~05M:±60mm
06M~10M:±100mm
11M~30M:±200mm

UNIT:mm	TITLE: M12 A Type 90° Male Conn.		ITEM NO	DRAWN BY: Yulong_wang	DATE: 2016-08-13
TOLERANCE: ±0.5mm	SCALE: 3:2 / SIZE: A4 / SHEET: 1 OF 3	Amphenol LTW 安費諾亮泰企業股份有限公司	DWG NO: MSAP-XXBMMM-SR8XXX	CHECKED BY: Jinhai	DATE: 2016-08-13
	REV.: C / WC-REV.: A.1 / QC: Inspection item		CUSTOMER: ALTW	APPROVED BY: Jerry	DATE: 2016-08-13

FMW10702-01-02A1

THIS DOCUMENT IS SUBJECT TO CHANGE WITHOUT NOTICE. IT IS CONFIDENTIAL AND A PROPERTY OF Amphenol LTW. DISCLOSURE TO THIRD PARTY HAS TO BE AUTHORIZED BY Amphenol LTW.

Contacts	Cable Jacket	Cable OD	AWG	Item No.
12P	PVC	6.0	26	MSAP-12BMMM-SR8DXX
10P				MSAP-10BMMM-SR8DXX
8P		5.5	24	MSAP-08BMMM-SR8DXX
6P		5.0		MSAP-06BMMM-SR8DXX
5P		5.1	22	MSAP-05BMMM-SR8DXX
4P		4.8		MSAP-04BMMM-SR8DXX
3P		4.5		MSAP-03BMMM-SR8DXX
12P	PUR	6.0	26	MSAP-12BMMM-SR8BXX
10P				MSAP-10BMMM-SR8BXX
8P		5.5	24	MSAP-08BMMM-SR8BXX
6P		5.0		MSAP-06BMMM-SR8BXX
5P		5.1	22	MSAP-05BMMM-SR8BXX
4P		4.8		MSAP-04BMMM-SR8BXX
3P		4.5		MSAP-03BMMM-SR8BXX
12P	PVC	6.0	26	MSAP-12BMMM-SR8AXX
10P				MSAP-10BMMM-SR8AXX
8P		5.5	24	MSAP-08BMMM-SR8AXX
6P		5.0		MSAP-06BMMM-SR8AXX
5P		5.1	22	MSAP-05BMMM-SR8AXX
4P		4.8		MSAP-04BMMM-SR8AXX
3P		4.5		MSAP-03BMMM-SR8AXX

ALTW
CONFIDENTIAL
2016-08-13
R&D DEPT.

M SAP - XX B M M M - S R 8 X XX

SAP: A-Code Plastic Nut

03: 3Pin
04: 4Pin
05: 5Pin
06: 6Pin (C)
08: 8Pin
10: 10Pin
12: 12Pin

B: Cable Without S/R(線端無網尾)

M: Male Connector(公座)

M: Male Pin(公Pin)

M: Molding Type(射出成型)

S: Screw(螺紋式)

R: Right(90°線端)

8: IP68/69K(防水等級68/69K) (C)

A: PVC UL2517 Cable, Yellow(PVC黃色外被線材)
B: PUR UL20549 Cable, Black(PUR黑色外被線材)
D: PVC UL2517 Cable, Black(PVC黑色外被線材) (B)

XX: 01~99Meters
01: 01Meter
02: 02Meters
:
99: 99Meters

ALTW
DCC. DEPT.
CONFIDENTIAL
2016.08.18
ISSUED

UNIT: mm

TOLERANCE
±0.5mm

TITLE: M12 A Type 90° Male Conn.

SCALE: 3:2 | SIZE: A4 | SHEET 2 OF 3
REV. C | WC-REV. A.1 | (QC): Inspection item

Amphenol LTW
安費諾亮泰企業股份有限公司

ITEM NO	DRAWN BY: Yulong_wang	DATE: 2016-08-13
DWG NO: MSAP-XXBMMM-SR8XXX	CHECKED BY: Jinhai	DATE: 2016-08-13
CUSTOMER: ALTW	APPROVED BY: Jerry	DATE: 2016-08-13

FMW10702-01-02A1

THIS DOCUMENT IS SUBJECT TO CHANGE WITHOUT NOTICE. IT IS CONFIDENTIAL AND A PROPERTY OF Amphenol LTW. DISCLOSURE TO THIRD PARTY HAS TO BE AUTHORIZED BY Amphenol LTW.

ALTW DCC. DEPT. CONFIDENTIAL 2016.08.18 ISSUED

ALTW CONFIDENTIAL 2016-08-13 R&D DEPT.

C

Pin #	Wire	
5	--	
4	Black	黑
3	Blue	藍
2	--	
1	Brown	棕

Pin #	Wire	
5	--	
4	Black	黑
3	Blue	藍
2	White	白
1	Brown	棕

Pin #	Wire	
5	Gray	灰
4	Black	黑
3	Blue	藍
2	White	白
1	Brown	棕

Pin #	Wire	
8	--	
7	Blue	藍
6	Pink	粉
5	--	
4	Yellow	黃
3	Green	綠
2	Brown	棕
1	White	白

Pin #	Wire	
8	Red	紅
7	Blue	藍
6	Pink	粉
5	Gray	灰
4	Yellow	黃
3	Green	綠
2	Brown	棕
1	White	白

Pin #	Wire	
12	--	
11	--	
10	Violet	紫
9	Black	黑
8	Red	紅
7	Blue	藍
6	Pink	粉
5	Gray	灰
4	Yellow	黃
3	Green	綠
2	Brown	棕
1	White	白

Pin #	Wire	
12	Red/Blue	紅/藍
11	Gray/Pink	灰/粉
10	Violet	紫
9	Black	黑
8	Red	紅
7	Blue	藍
6	Pink	粉
5	Gray	灰
4	Yellow	黃
3	Green	綠
2	Brown	棕
1	White	白

Pin Out

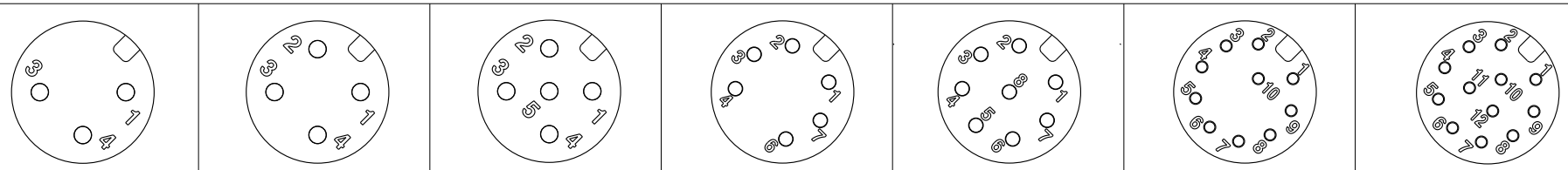

3P 4P 5P 6P 8P 10P 12P

Pin Assignments Front View

UNIT: mm

TOLERANCE ±0.5mm

TITLE: M12 A Type 90° Male Conn.

SCALE 3:2 | SIZE A4 | SHEET 3 OF 3

REV. C | WC-REV. A.1 | QC: Inspection item

Amphenol LTW

安費諾亮泰企業股份有限公司

ITEM NO	DRAWN BY: Yulong_wang	DATE: 2016-08-13
DWG NO: MSAP-XXBMMM-SR8XXX	CHECKED BY: Jinhai	DATE: 2016-08-13
CUSTOMER: ALTW	APPROVED BY: Jerry	DATE: 2016-08-13

FMW10702-01-02A1

THIS DOCUMENT IS SUBJECT TO CHANGE WITHOUT NOTICE. IT IS CONFIDENTIAL AND A PROPERTY OF Amphenol LTW. DISCLOSURE TO THIRD PARTY HAS TO BE AUTHORIZED BY Amphenol LTW.

Mouser Electronics

Authorized Distributor

Click to View Pricing, Inventory, Delivery & Lifecycle Information:

Amphenol:

MSAP-06BMMM-SR8B10 MSAP-06BMMM-SR8D04 MSAP-08BMMM-SR8B10 MSAP-06BMMM-SR8B03 MSAP-03BMMM-SR8A10 MSAP-08BMMM-SR8D04 MSAP-12BMMM-SR8B05 MSAP-04BMMM-SR8D04 MSAP-05BMMM-SR8D05 MSAP-12BMMM-SR8B02 MSAP-10BMMM-SR8B04 MSAP-03BMMM-SR8A03 MSAP-12BMMM-SR8A04 MSAP-10BMMM-SR8D05 MSAP-03BMMM-SR8D05 MSAP-10BMMM-SR8D02 MSAP-08BMMM-SR8D05 MSAP-10BMMM-SR8D03 MSAP-05BMMM-SR8A10 MSAP-05BMMM-SR8D02 MSAP-12BMMM-SR8D03 MSAP-03BMMM-SR8B04 MSAP-06BMMM-SR8A05 MSAP-10BMMM-SR8D10 MSAP-06BMMM-SR8A02 MSAP-10BMMM-SR8B05 MSAP-05BMMM-SR8B02 MSAP-03BMMM-SR8B02 MSAP-12BMMM-SR8A05 MSAP-06BMMM-SR8A10 MSAP-04BMMM-SR8B03 MSAP-05BMMM-SR8B03 MSAP-10BMMM-SR8B10 MSAP-05BMMM-SR8B05 MSAP-05BMMM-SR8D10 MSAP-08BMMM-SR8D02 MSAP-06BMMM-SR8B04 MSAP-12BMMM-SR8B10 MSAP-04BMMM-SR8A02 MSAP-08BMMM-SR8B04 MSAP-12BMMM-SR8A02 MSAP-04BMMM-SR8A10 MSAP-03BMMM-SR8B05 MSAP-10BMMM-SR8B02 MSAP-05BMMM-SR8A05 MSAP-06BMMM-SR8A03 MSAP-05BMMM-SR8A04 MSAP-03BMMM-SR8D03 MSAP-08BMMM-SR8A10 MSAP-04BMMM-SR8B04 MSAP-06BMMM-SR8D05 MSAP-08BMMM-SR8B03 MSAP-10BMMM-SR8A03 MSAP-04BMMM-SR8A03 MSAP-10BMMM-SR8A05 MSAP-08BMMM-SR8A05 MSAP-04BMMM-SR8D10 MSAP-03BMMM-SR8D02 MSAP-04BMMM-SR8B02 MSAP-05BMMM-SR8A02 MSAP-03BMMM-SR8B10 MSAP-08BMMM-SR8A03 MSAP-10BMMM-SR8A04 MSAP-04BMMM-SR8A05 MSAP-12BMMM-SR8D10 MSAP-06BMMM-SR8A04 MSAP-03BMMM-SR8A02 MSAP-08BMMM-SR8B02 MSAP-06BMMM-SR8D02 MSAP-08BMMM-SR8A02 MSAP-12BMMM-SR8D02 MSAP-12BMMM-SR8A03 MSAP-08BMMM-SR8A04 MSAP-10BMMM-SR8D04 MSAP-04BMMM-SR8A04 MSAP-12BMMM-SR8A10 MSAP-10BMMM-SR8A02 MSAP-10BMMM-SR8B03 MSAP-03BMMM-SR8B03 MSAP-03BMMM-SR8D04 MSAP-04BMMM-SR8D03 MSAP-12BMMM-SR8B04 MSAP-05BMMM-SR8B10 MSAP-05BMMM-SR8D04 MSAP-06BMMM-SR8B02 MSAP-12BMMM-SR8B03 MSAP-12BMMM-SR8D05 MSAP-10BMMM-SR8A10 MSAP-05BMMM-SR8B04 MSAP-04BMMM-SR8D05 MSAP-03BMMM-SR8A04 MSAP-08BMMM-SR8B05 MSAP-04BMMM-SR8B05 MSAP-04BMMM-SR8B10 MSAP-05BMMM-SR8A03 MSAP-06BMMM-SR8B05 MSAP-12BMMM-SR8D04 MSAP-03BMMM-SR8D10 MSAP-05BMMM-SR8D03 MSAP-06BMMM-SR8D10