DWG NO.	SH	REV
C–NDAAFJ–C199	1	D

TABLE 1		
AHSP P/N	LENGTH "A" MM	CUSTOMER P/N
NDAAFJ–C102	5000 ±100	SF–NDAAFJ100G–005M
NDAAFJ–C103	2000 ±50	SF–NDAAFJ100G–002M
NDAAFJ–C104	3000 ±75	SF–NDAAFJ100G–003M
NDAAFJ–C105	4000 ±100	SF–NDAAFJ100G–004M

REVISIONS						
ZONE	REV.	ECN	DESCRIPTION	BY	DATE	APPROVED
	B	DDYR–A3ZNVY.VER01	ADDED 2M & 3M ASSY LENGTHS IN TABLE 1	HCL	11/19/2015	DD
	C	DDYR–A8KPVD.VER01	REVISED TITLE BLOCK	DC	3/31/2016	DC
	D	DDYR–18091101	ADDED NDAAFJ–C105 AHSP P/N IN TABLE 1.	HCL–SH	09/19/2018	D.DYER

NOTE: ONLY THREE MOST RECENT RELEASED REVISIONS DISPLAYED.

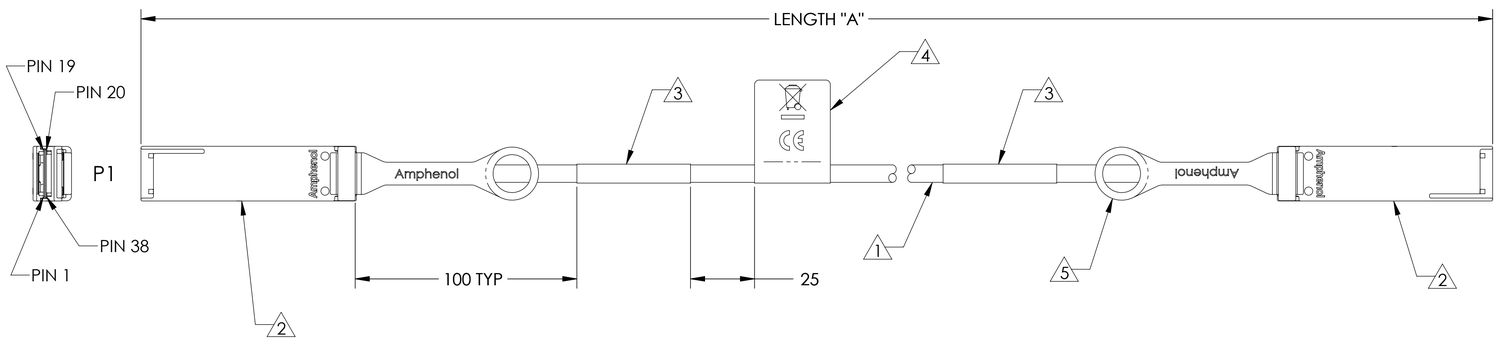

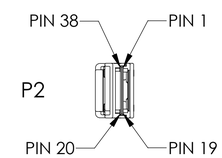

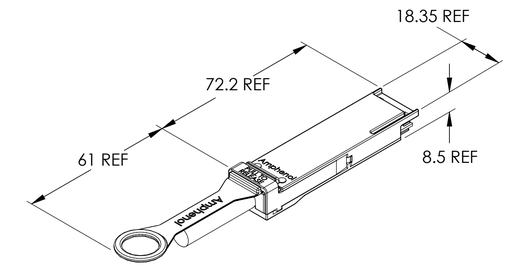

QSFP DIECAST DIMENSIONS

TABLE 2	
ITEM No.	DESCRIPTION
1	26 AWG, 8–PR, PVC BLACK, UL 75°C CL2
2	PLUG, QSFP+, REFERENCE SFF–8661
3	LABEL, WRAPPED – AHSP P/N, REV, DATE CODE, LENGTH, CoO & SERIAL NUMBER
4	LABEL, FLAGGED – WEEE LOGO AND CE LOGO
5	LANYARD – PANTONE 347C (GREEN)
6	EPROM – REFERENCE SFF–8636, PAGE A0 ONLY

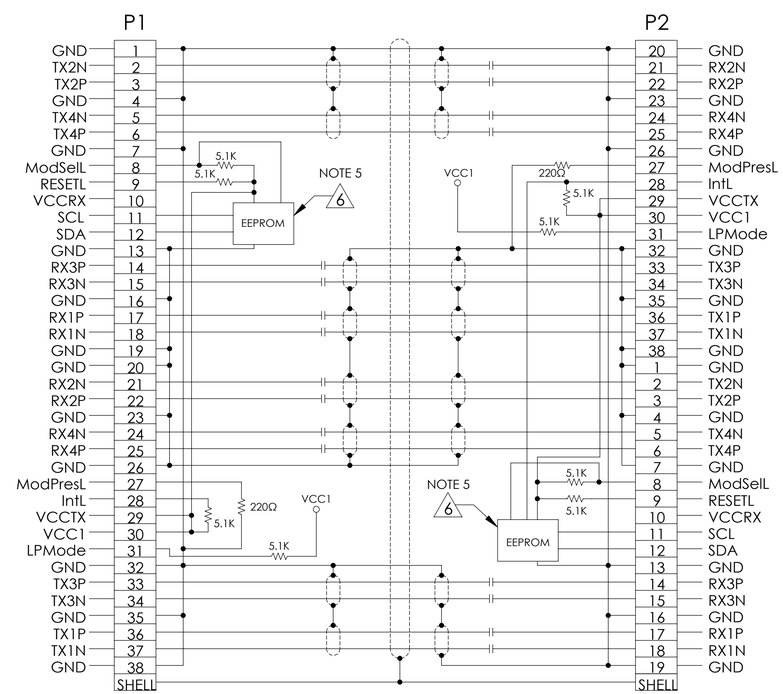

NOTE: DC BLOCKING CAP VALUE IS 0.1μ
FEPROM CONNECTED TO VCCTX

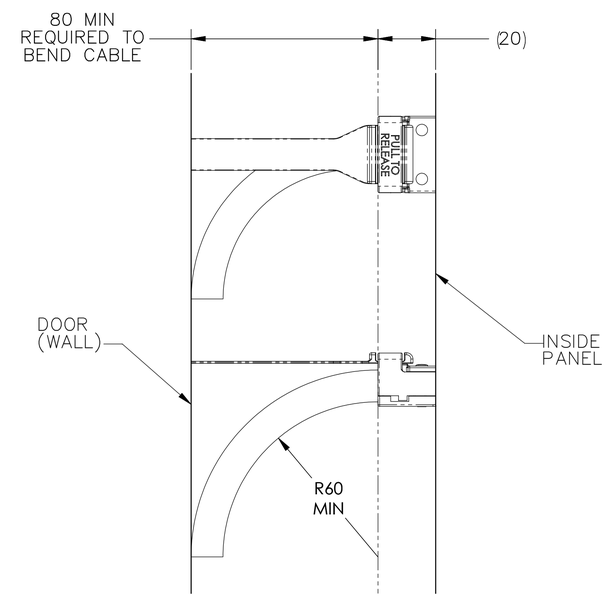

RADIUS FROM EDGE OF DIECAST

7. UL LABEL MUST BE ON THE SHIPPING CARTON PER SUBJECT 764 OF THE UL COMPONENT WIRING HARNESS (ZPFW2) FILE #E86140. CSA LABEL MUST BE ON SHIPPING CARTON.
6. PACKAGE COMPLETED ASSY IN AN APPROPRIATELY SIZED ESD BAG.
5. EPROM CONTENT SHALL BE COMPLIANT WITH SFF–8636 SPECIFICATIONS FOR 100G BASE–CR4. EPROM REVISION IS EQUAL TO AHSP PART NUMBER REVISION.
4. CABLE ASSEMBLIES MUST MEET SHIELDING EFFECTIVENESS REQUIREMENTS OF 35dB FROM 1–10GHz AND 30dB FROM 10–18GHz.
3. COMPLIANT TO EU DIRECTIVE 2011/65/EU – RoHS2.
2. ASSEMBLIES SHALL BE COMPLIANT TO 100GBASE–CR4 SPECIFICATION.
1. THIS DRAWING IS RESERVED FOR AMPHENOL CABLES ON DEMAND.

NOTES: UNLESS OTHERWISE SPECIFIED

Amphenol RoHS 2011/65/EU

TOLERANCES	
0.0	± 0.25
0.00	± 0.08
0.000	± –
ANGLES	± 1.0°

UNLESS OTHERWISE SPECIFIED DIMENSIONS ARE IN MM

DWN	10/13/2015	DC
CHK	10/13/2015	DD
APVD	10/13/2015	EM

Amphenol AHSP
A Division of Amphenol Corporation
200 Innovative Way, Suite 201, Nashua, N.H. 03062 (603) 879–3000

TITLE: CABLE ASSEMBLY, QSFP/QSFP, PSV, 100Ω, 100 GbE, 26 AWG EXD

INTERPRET PER ASME Y14.5

CODE IDENT 31413

CUSTOMER USE DRAWING

PART NO.	REV
SEE TABLE 1	N/A
DRAWING NO. C–NDAAFJ–C199	REV D

SIZE D | SCALE 1:1 | SHEET 1 OF 1

DWG NO. C–NDAAFJ–C199 | SH 1 | REV D

AHSP_szD_mm.drwdot Rev01/201409

Mouser Electronics

Authorized Distributor

Click to View Pricing, Inventory, Delivery & Lifecycle Information:

Amphenol:

SF-NDAAFJ100G-003M SF-NDAAFJ100G-002M SF-NDAAFJ100G-005M