REVISIONS					
REV	ECO	DESCRIPTION	DATE	BY	APPR
A1	–	RELEASED DRAWING	Feb-02-2021	Ronald	Tommy

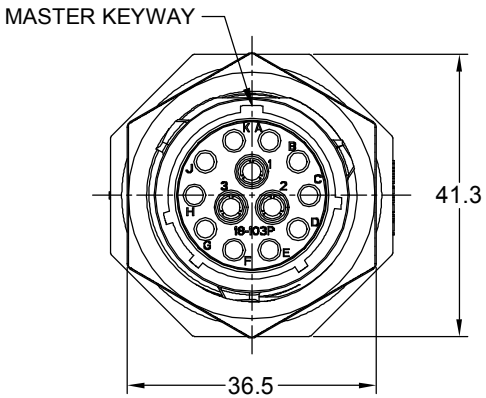

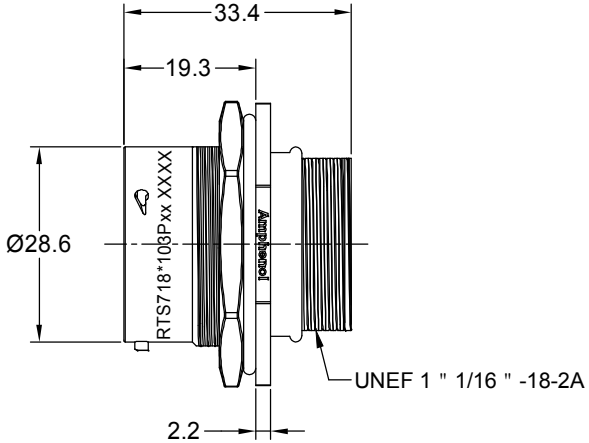

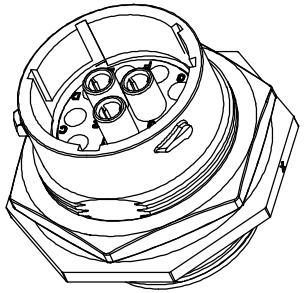

NOTES : (UNLESS OTHERWISE SPECIFIED)

1. MATERIAL :
   - SHELL : THERMOPLASTIC , UL94 V-0.
   - INSERT : THERMOPLASTIC , UL94 V-0.
   - O-RING : NBR/SILICONE RUBBER.
   - SEAL GASKET : NBR/SILICONE RUBBER.
   - JAM NUT : ALUMINIUM ALLOY , BLACK ANODIZING.
2. SPECIFICATIONS :
   - 2.1 RATED CURRENT :
     - 2.1.1 16# CONTACT 13A (MAX).
     - 2.1.2 RF CONTACT 1A (MAX) .
   - 2.2 RATED VOLTAGE : 500V(AC/DC).
   - 2.3 OPERATING TEMPERATURE : SEE TABLE.
   - 2.4 DIELECTRIC WITHSTANDING VOLTAGE : LESS THAN 2 MILLIAMPS CURRENT LEAKAGE@2000 VOLTS AC.
   - 2.5 INSULATION RESISTANCE : 5000 MEGOHMS MIN.
   - 2.6 IP--CLASS : IP67 AND IP69K IN THE MATED CONDITION, PANEL EXTERNAL.
   - 2.7 MATING CYCLES DURABILITY : 500 CYCLES MIN.
   - 2.8 RoHS COMPLIANT.
3. SUITABLE CONTACTS : 16# & RF CONTACTS.
4. ALL DIMENSIONS ARE FOR REFERENCE USE ONLY.

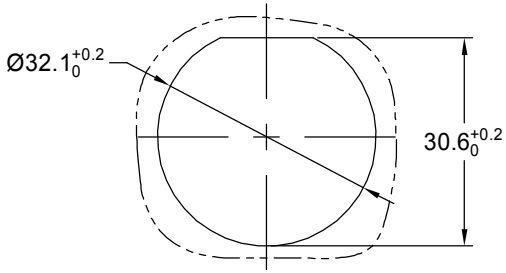

PANEL CUT OUT REFERENCE

KEY	PART NUMBER	
	-40°C ~ 105°C	-40°C ~ 125°C
N	RTS718N103P	RTS718N103P03

QUANTITY	PART NUMBER	DESCRIPTION	ITEM

MATERIALS LIST

UNLESS OTHERWISE SPECIFIED
1) All dimensions are in metric(mm).
2) Tolerances are as follows:
1 PL DEC ±0.30
2 PL DEC ±0.15
3 PL DEC ±0.08
Fractions ±1/64
Angles ±1°
3) Note reference = X

MATERIAL SPECIFICATIONS:

PROCESS SPECIFICATIONS:

NEXT ASS'Y:

SIGNATURES		DATE
DRAWN:	Ronald	Feb-02-21
CHECKED:	Flan	Feb-03-21
ENGINEER:		
APPROVAL:	Tommy	Feb-04-21
CUSTOMER:		

THIS DRAWING IS SUPPLIED FOR INFORMATION ONLY. DESIGN FEATURES, SPECIFICATIONS AND PERFORMANCE DATA SHOWN HEREON ARE THE PROPERTY OF THE AMPHENOL CORPORATION. NO RIGHTS OF REPRODUCTION ARE IMPLIED. ALL DIMENSIONS ARE SUBJECT TO NORMAL MANUFACTURING VARIATIONS.

Amphenol
Sine Systems - www.amphenol-sine.com
44724 Morley Drive
Clinton Township, MI 48036

ECOMATE AQUARIUS,RECEPTACLE, JAM NUT,SIZE 18,10+3 POS,PIN.

SIZE	TYPE	DWG NO:	REVISION
B	C-	RTS718*103Pxx	A1

SCALE: NONE SHEET 1 OF 1

TITLE: ECOMATE AQUARIUS,RECEPTACLE,JAM NUT,SIZE 18,10+3 POS,PIN.
DWG NO: RTS718*103Pxx
REV: A1
SH: 1
OF: 1

Mouser Electronics

Authorized Distributor

Click to View Pricing, Inventory, Delivery & Lifecycle Information:

Amphenol:
RTS718N103P03