REV.	ECN NO.	DATE	SIGN	DESCRIPTION
A	Initial Release	2015/07/25	Feng_Li	Change Rev.01 To Rev.A
B	LEN16A0103~105	2016/10/14	Yulong_wang	Add 3, 5Pin, IP69K & Cat5e Cable.
C	LEN1710045~047	2017/01/07	Yulong_wang	Change the Front View.

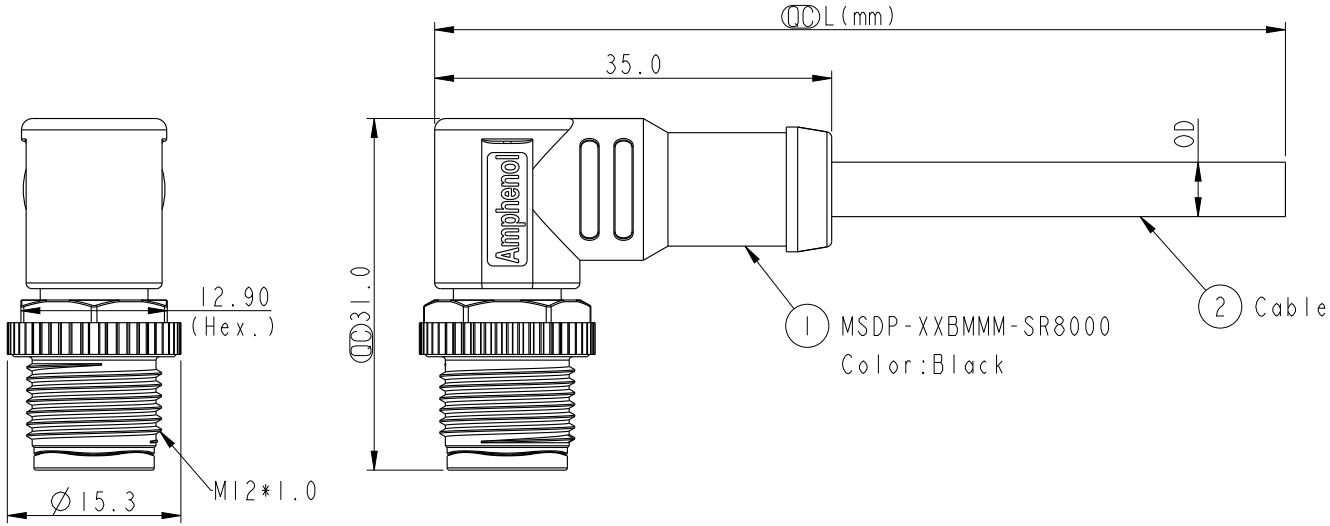

ALTW
CONFIDENTIAL
2017-01-07
R&D DEPT.

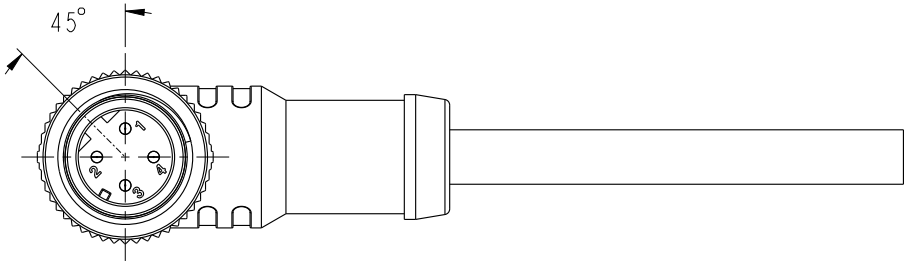

ALTW
DCC. DEPT.
CONFIDENTIAL
2017.01.16
ISSUED

Notes:
* QC Important Dimension.
B * Waterproof Rate: IP68, IP69K.
* Connector: PU+GF, Black.
* Male Pin: Copper Alloy, Gold Plated.
* Screw Nut: Nylon, Black.
* Outer Mold: PU, Black.
B * Cable: (A) UL2517,PVC Jacket,Yellow.
(B) UL20549,PUR Jacket,Black.
(D) UL2517,PVC Jacket,Black.
(E) CAT5E, PU Jacket, Black.
B * Rated Voltage: 3 & 4Pin 250V dc. or ac.
5Pin 60V dc. or ac.
* Rated Current: 4A
* Operating Temperature: -25~+85°C
* Cable Length Tolerance: 01M:±40mm
02M~05M:±60mm
06M~10M:±100mm
11M~30M:±200mm
31M~99M:±500mm

UNIT:mm	TITLE: M12 D Type Cable 90° Male Conn.	Amphenol LTW 安費諾亮泰企業股份有限公司	ITEM NO	DRAWN BY: Yulong_wang	DATE: 2017-01-07
TOLERANCE: ±0.5mm	SCALE: 3:2 / SIZE: A4 / SHEET: 1 OF 2		DWG NO: MSDP-XXBMMM-SR8XXX	CHECKED BY: Jinhai	DATE: 2017-01-07
	REV.: C / WC-REV.: A.2		CUSTOMER: ALTW	APPROVED BY: Jerry	DATE: 2017-01-07
	QC: Inspection item				

FMW10702-01-02A1

THIS DOCUMENT IS SUBJECT TO CHANGE WITHOUT NOTICE. IT IS CONFIDENTIAL AND A PROPERTY OF Amphenol LTW. DISCLOSURE TO THIRD PARTY HAS TO BE AUTHORIZED BY Amphenol LTW.

M SDP - XX B M M M - S R 8 X XX

SDP:D-Code Plastic Nut

03:3Pin
04:4Pin
05:5Pin

B:Cable Without S/R(線端無網尾)

M:Male Connector(公座)

M:Male Pin(公Pin)

M:Molding Type(射出成型)

S:Screw(螺紋式)

XX:01~99Meters
01:01Meter
02:02Meters
:
99:99Meters

A:PVC UL2517 Cable,Yellow(PVC黃色外被線材)
B:PUR UL20549 Cable,Black(PUR黑色外被線材)
D:PVC UL2517 Cable,Black(PVC黑色外被線材)
E:PU Cat5e Cable,Black(PU Cat5e黑色外被線材)

8:IP68/69K(防水等級68/69K)

R: Right(90°線端)

Contacts	Cable Jacket	Cable OD	AWG	Item No.
4P	PU	6.2	22	MSDP-04BMMM-SR8EXX
5P	PVC	5.1		MSDP-05BMMM-SR8DXX
4P		4.8		MSDP-04BMMM-SR8DXX
3P		4.5		MSDP-03BMMM-SR8DXX
5P	PUR	4.4		MSDP-05BMMM-SR8BXX
4P		4.0		MSDP-04BMMM-SR8BXX
3P		3.8		MSDP-03BMMM-SR8BXX
5P	PVC	5.1		MSDP-05BMMM-SR8AXX
4P		4.8		MSDP-04BMMM-SR8AXX
3P		4.5		MSDP-03BMMM-SR8AXX

Pin #	Wire	
5	--	
4	Black	黑
3	Blue	藍
2	--	
1	Brown	棕

Pin #	Wire	
5	--	
4	Black	黑
3	Blue	藍
2	White	白
1	Brown	棕

Pin #	Wire	
5	Gray	灰
4	Black	黑
3	Blue	藍
2	White	白
1	Brown	棕

Pin #	Wire (Cat5e)		
4	Green	綠	Twist 對線
2	White/Green	白/綠	
3	Orange	橙	Twist 對線
1	White/Orange	白/橙	

Pin Out

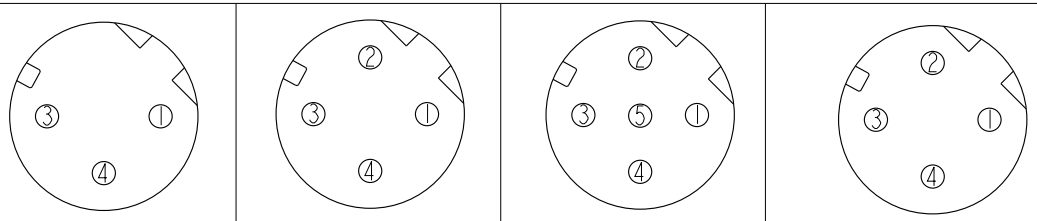

Pin Assignments Front View

ALTW
CONFIDENTIAL
2017-01-07
R&D DEPT.

UNIT:mm

TOLERANCE
±0.5mm

TITLE: M12 D Type Cable 90° Male Conn.			
SCALE 3:2	SIZE A4	SHEET 2 OF 2	
REV. C	WC-REV. A.2	QC:Inspection item	

Amphenol LTW
安費諾亮泰企業股份有限公司

ITEM NO	DRAWN BY Yulong_wang	DATE 2017-01-07
DWG NO MSDP-XXBMMM-SR8XXX	CHECKED BY Jinhai	DATE 2017-01-07
CUSTOMER ALTW	APPROVED BY Jerry	DATE 2017-01-07

FMW10702-01-02A1

THIS DOCUMENT IS SUBJECT TO CHANGE WITHOUT NOTICE. IT IS CONFIDENTIAL AND A PROPERTY OF Amphenol LTW. DISCLOSURE TO THIRD PARTY HAS TO BE AUTHORIZED BY Amphenol LTW.

Mouser Electronics

Authorized Distributor

Click to View Pricing, Inventory, Delivery & Lifecycle Information:

Amphenol:

MSDP-04BMMM-SR8A01 MSDP-04BMMM-SR8D01 MSDP-04BMMM-SR8B01