ROHS COMPLIANT

PRODUCT DATA DRAWING

REVISION HISTORY			
REV	DESCRIPTION	DATE	APPROVED
-	DCN 41023	01/15	STW

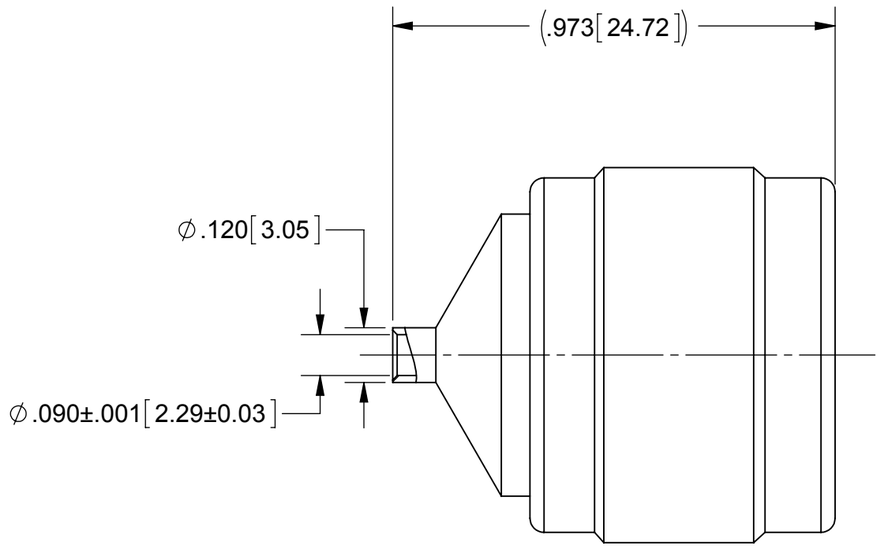

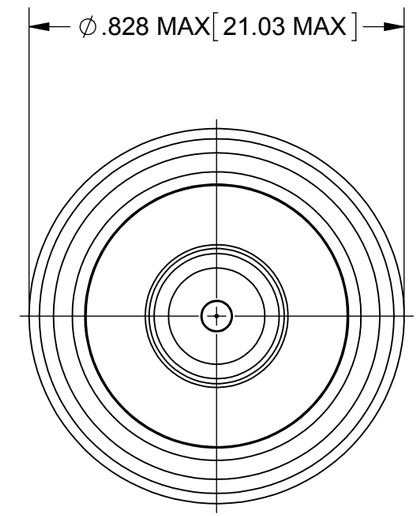

MATERIAL:

BODY & COUPLING NUT: STAINLESS STEEL PER AMS-5640, ALLOY UNS S30300, TYPE 1

CONTACT: BRASS PER ASTM B16, ALLOY UNS No. C36000

LOCK RING: PHOSPHOR BRONZE PER ASTM-B-159, ALLOY 5100, TEMPER H08

INSULATOR: PTFE PER ASTM D1710, TYPE I, GRADE 1, CLASS B

GASKET: SILICONE RUBBER PER A-A-59588, CLASS 2B, GRADE 50/60

FINISH:

BODY & CONTACT: GOLD PER ASTM B 488, TYPE II, CODE C, CLASS .76, OVER NICKEL PER AMS-QQ-N-290, CLASS 1, .00005" MIN.

COUPLING NUT: PASSIVATED PER AMS-2700

PERFORMANCE:

IMPEDANCE: 50 OHMS

MATERIAL: SEE NOTES

FINISH: SEE NOTES

SURFACE AREA: N/A

PROPRIETARY

THE INFORMATION CONTAINED IN THIS DRAWING IS THE SOLE PROPERTY OF SV MICROWAVE, INC. ANY REPRODUCTION IN PART OR AS A WHOLE WITHOUT THE WRITTEN PERMISSION OF SV MICROWAVE, INC IS PROHIBITED.

DIMENSIONS ARE IN INCHES TOLERANCES:

FRACTIONAL: ±1/64 ANGULAR: X° ±1°0' X°X' ±15'

DECIMAL: .X ±.030 .XX ±.010 .XXX ±.005

INTERPRET DIMENSIONS AND TOLERANCES PER ASME Y14.5M - 1994

THIRD ANGLE PROJECTION

UNLESS OTHERWISE SPECIFIED

1) ALL DIMENSIONS ARE IN INCHES [MILLIMETERS]
2) ALL DIMENSIONS ARE AFTER PLATING.
3) BREAK CORNERS & EDGES .005 R. MAX.
4) CHAM. 1ST & LAST THREADS.
5) SURFACE ROUGHNESS 63 MIL-STD-10.
6) DIA. S ON COMMON CENTERS TO BE CONCENTRIC WITHIN .005 T.I.R.
7) REMOVE ALL BURRS

DRAWN:	MAL 01/07/15	
CHECKED:	STW 01/07/15	
APPROVED:	STW 01/07/15	

SV Microwave, Inc.
2400 Centrepark West Drive, Suite 100
West Palm Beach, FL 33409

TITLE: PN PLUG FOR RG405 CABLE

SIZE	CAGE CODE	DWG. NO.
B	95077	SF6511-60010

SCALE: 3:1 SHEET 1 OF 1

Mouser Electronics

Authorized Distributor

Click to View Pricing, Inventory, Delivery & Lifecycle Information:

Amphenol:
SF6511-60010