REV.	ECN NO.	DATE	SIGN	DESCRIPTION
B	LEN-8C0038	2008/12/01	Vincent	Chage Size
C	C190314	2019/03/13	Ruru	Modify Note

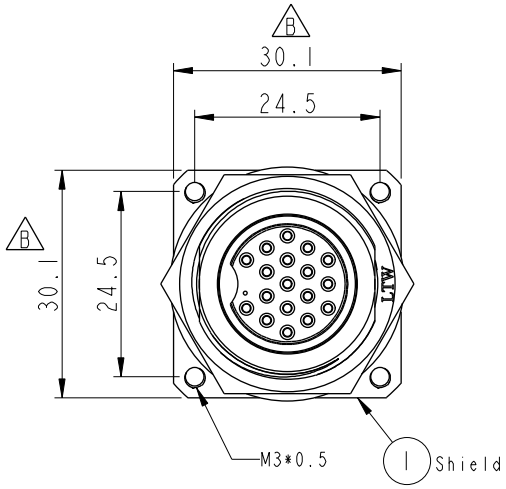

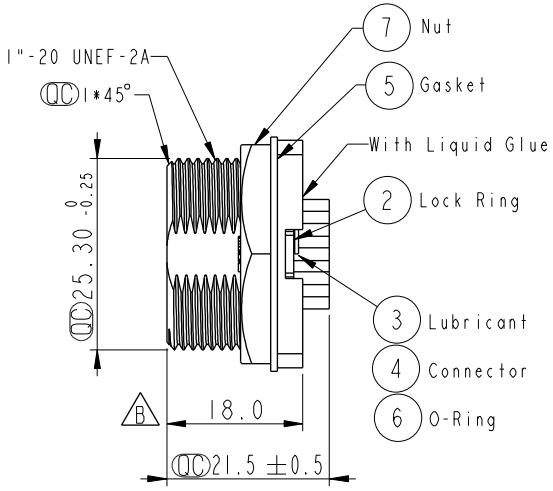

ALTW
CONFIDENTIAL
2019-03-13
R&D DEPT.

Note: C

* QC Important Dimension .
* Waterproof Rate: IP68, Unmated
  1M Depht of water in 24 hours
* Housing: Thermoplastic, Black
* Pin: Copper Alloy, Gold Plated
* Shield: Metal, Nickel Plated
* Gasket: Rubber, Black
* Nut: Metal, Nickel Plated
* O-Ring: Rubber, Black
* Connector With Glue (Connector)
* O-Ring Rub Rubber Lubricant (O-Ring)
* Use without Waterproof Cap or Dust Cap
  Panel Thickness Max: 3.5mm
* Gasket and Nut are packed separately
  in PE bags.

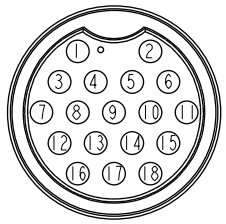

Pin Assignment
Front View

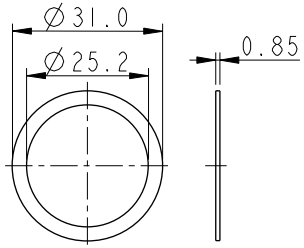

Gasket

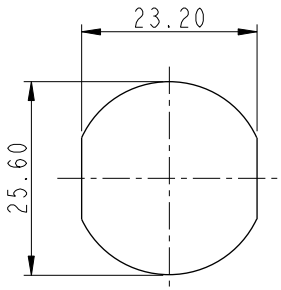

Recommended
Panel Cut-Out

UNIT: mm

TOLERANCE
.X ±0.25
.XX ±0.1
.XXX ±0.05
ANGLES ±1°

TITLE: 18Pin Shielded Male Connector Female Pin (PCB Type)			
SCALE 1:1	SIZE A4	SHEET 1 OF 1	
REV. C	WC-REV. A.2	QC: Inspection item	

Amphenol LTW
安費諾亮泰企業股份有限公司

ITEM NO DSD-18PMFS-SS8002	DRAWN BY Ruru	DATE 2019-03-13
DWG NO DSD-18PMFS-SS8002	CHECKED BY Rita	DATE 2019-03-13
CUSTOMER ALTW	APPROVED BY Max	DATE 2019-03-13

W10814-03-RW01A2

THIS DOCUMENT IS SUBJECT TO CHANGE WITHOUT NOTICE. IT IS CONFIDENTIAL AND A PROPERTY OF Amphenol LTW. DISCLOSURE TO THIRD PARTY HAS TO BE AUTHORIZED BY Amphenol LTW.

Mouser Electronics

Authorized Distributor

Click to View Pricing, Inventory, Delivery & Lifecycle Information:

Amphenol:
DSD-18PMFS-SS8002