REV.	ECN NO.	DATE	SIGN	DESCRIPTION
B	LEN1370189~192	2013/06/24	Ruru	Modify the SR & Change Logo

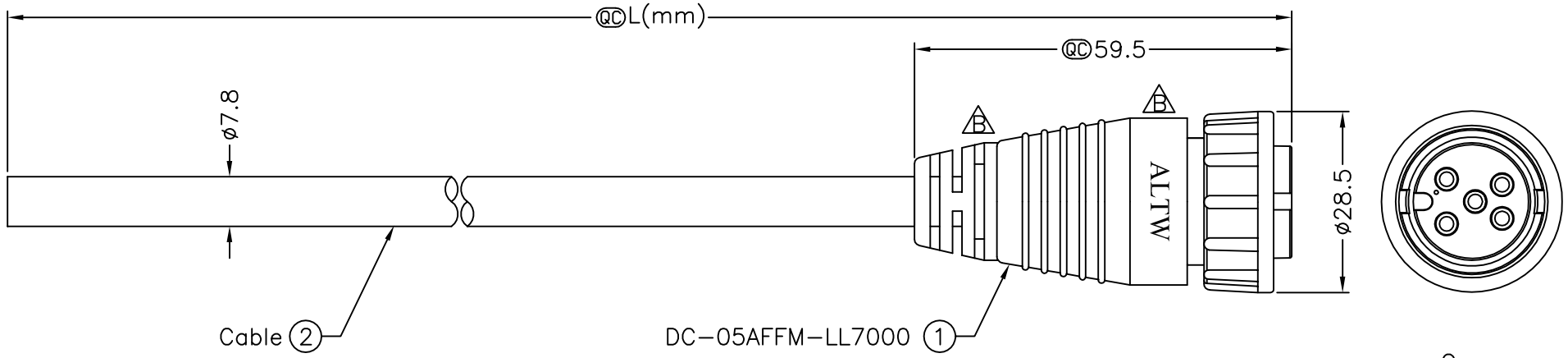

DC-05AFFM-LL7AXX

XX:01~99Meters
01:01Meter
02:02Meters
:
:
99:99Meters
Cable Length(L):01~99Meters

ALTW DCC. DEPT. CONFIDENTIAL 2013.07.17 ISSUED

ALTW CONFIDENTIAL 2013.06.24 R&D DEPT.

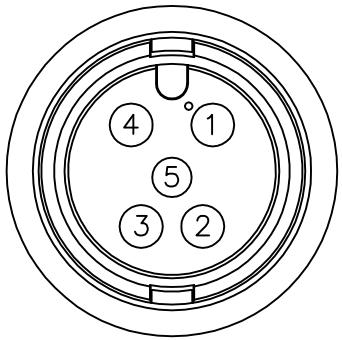

Pin Assignments
Front View

Conn.	Wire Color
5	White
4	Brown
3	Blue
2	Black
1	Red

Pin Out

Note:
* QC Important Dimension To Check
* Waterproof Rate: IP67
* Housing: Nylon+GF, Black
* Pin: Copper Alloy, Gold Plated
* Ring: EPDM, Black
* Nut: Nylon+GF, Black
* Cable: UL2464 16AWG*5C+T, UV Resistant OD=7.8mm
* Cable Length Tolerance: 1M~10M±5%mm, 11M~99M±500mm

UNIT:mm	TITLE: Large Cable Lock 5Pin F Conn F Pin	ITEM NO	DRAWN BY: Ruru — DATE: 2013/06/24
TOLERANCE: ±0.5 mm	SCALE: Free — SHEET: 1 OF 1	DWG NO: DC-05AFFM-LL7AXX	CHECKED BY: Vicky — DATE: 2013/06/24
	REV.: B — SIZE: A4 — QC :Inspection Item	CUSTOMER: ALTW	APPROVED BY: Maslow — DATE: 2013/06/24

Amphenol LTW
安費諾亮泰企業股份有限公司

THIS DOCUMENT IS SUBJECT TO CHANGE WITHOUT NOTICE. IT IS CONFIDENTIAL AND A PROPERTY OF Amphenol LTW. DISCLOSURE TO THIRD PARTY HAS TO BE AUTHORIZED BY Amphenol LTW.

FMWI0702-01-01A2

Mouser Electronics

Authorized Distributor

Click to View Pricing, Inventory, Delivery & Lifecycle Information:

Amphenol:
1DC-05AFFM-LL7A01