REV.	ECN NO.	DATE	SIGN	DESCRIPTION
C	LEN1730322	2017/03/21	Vicky	Update Logo
D	LEN1840077	2018/04/13	Ethan	Modify Panel Thickness
E	C190310	2019/03/12	Ruru	Modify Note

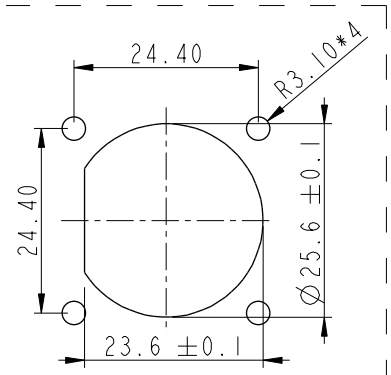

Recommended Panel Cut-Out

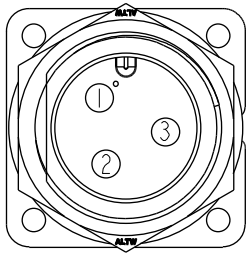

Pin Assignments Front View

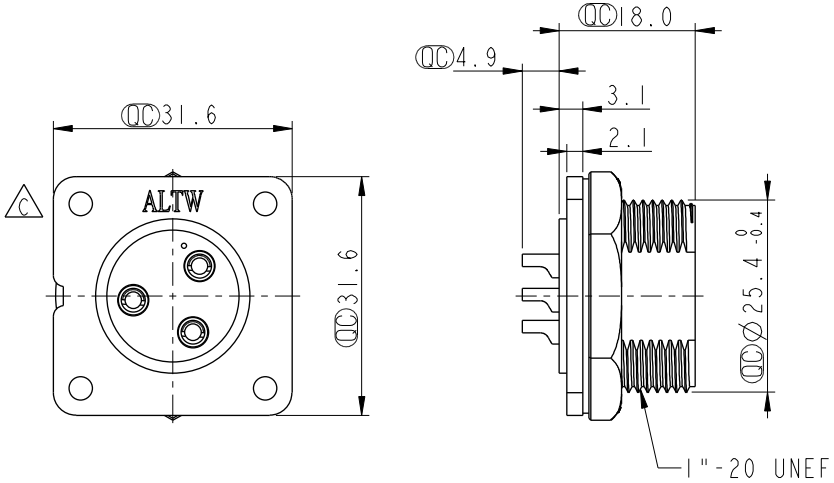

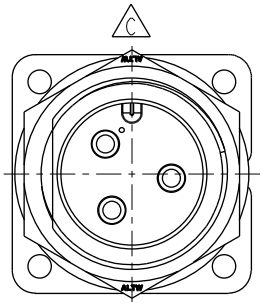

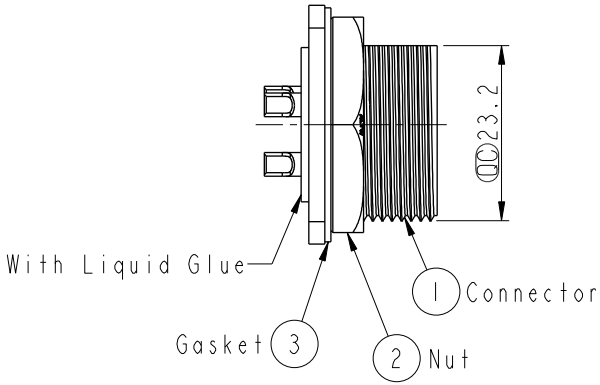

ALTW
CONFIDENTIAL
2019-03-12
R&D DEPT.

Note: E
* QC Important Dimension.
* Waterproof Rate: IP67, Unmated
* Housing: Thermoplastic, Black
* Pin: Copper Alloy, Gold Plated
* Nut: Thermoplastic, Black
* Gasket: Rubber, Black
D * Use Waterproof Cap or Dust Cap Panel Thickness Max:1.8mm
D * Use without Waterproof Cap or Dust Cap Panel Thickness Max: 3.0mm
* Gasket and Nut are packed separately in PE bags.

UNIT:mm

TOLERANCE
.X ±0.25
.XX ±0.1
.XXX ±0.05
ANGLES ±1°

TITLE: Screw Type Connector For Panel Mount 3Pin Male Connector Male Pin(20A)

SCALE	SIZE	SHEET
1:1	A4	1 OF 1
REV. E	WC-REV. A.3	QC: Inspection item

Amphenol LTW
安費諾亮泰企業股份有限公司

ITEM NO	DRAWN BY	DATE
DC-03PMMS-SS7001	Ruru	2019-03-12
DWG NO DC-03PMMS-SS7001	CHECKED BY Rita	DATE 2019-03-12
CUSTOMER ALTW	APPROVED BY Max	DATE 2019-03-12

W10814-03-RM01A2

THIS DOCUMENT IS SUBJECT TO CHANGE WITHOUT NOTICE. IT IS CONFIDENTIAL AND A PROPERTY OF Amphenol LTW. DISCLOSURE TO THIRD PARTY HAS TO BE AUTHORIZED BY Amphenol LTW.

Mouser Electronics

Authorized Distributor

Click to View Pricing, Inventory, Delivery & Lifecycle Information:

Amphenol:
1DC-03PMMS-SS7001