Connector Location A

Connector Location B

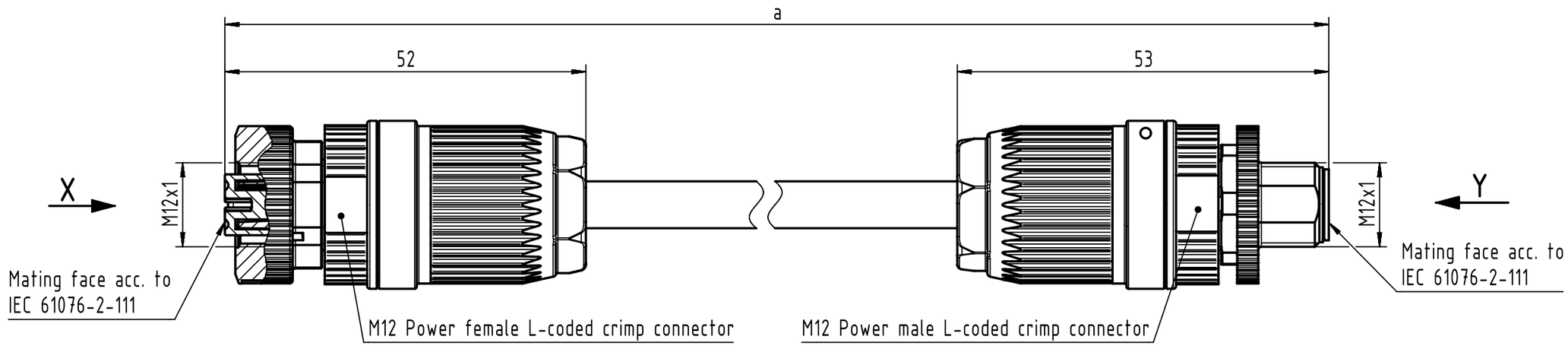

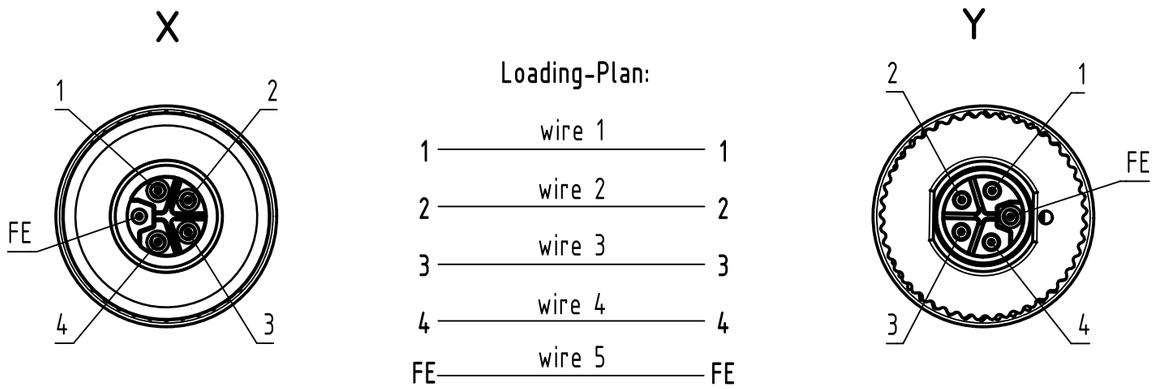

length in "1m" step	100	XXX=000
	99	XXX=990
	. .	. .
	12	XXX=120
	11	XXX=110
length in "0.1m" step	10	XXX=100
	9.9	XXX=099
	9.8	XXX=098
	. .	. .
	0.5	XXX=005
	0.4	XXX=004
	0.3	XXX=003
	0.2	XXX=002
Step	**a[m]**	**XXX**

6.0 to 100	±1%
0.6 to 5.9	+0.04
0.2 to 0.5	+0.02
a [m]	**Tolerance**

OZ-500, PVC grey, 5x1,5mm²	2133A7A8523XXX
Type of cable	**Part no.**

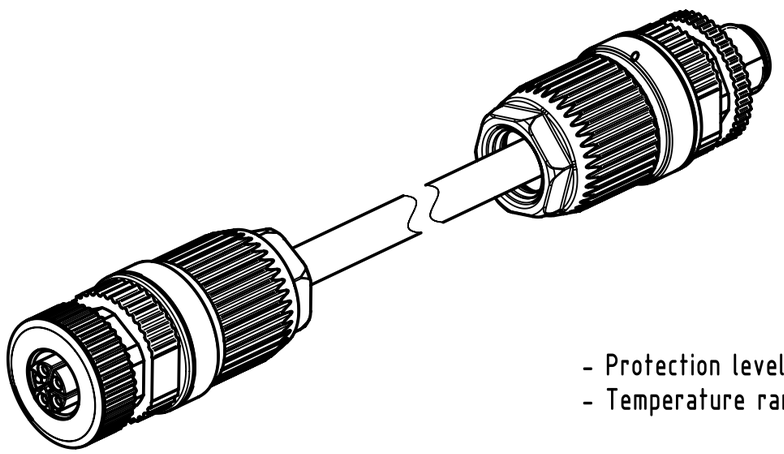

- Protection level: IP65/67
- Temperature range: -40°C ... +80°C

All Dimensions in mm	Tech. Character.	Free size tol.		According to production drawing 2016-09-07
All rights reserved	Created by COSTEA	Inspected by MUNTEANV	Standardisation AVRAM	Date 2016-09-08	State Final Release
Department HCS - RO	Title M12 L-coded Cable Assembly			Doc-Key / ECM-Nr. 100689051/UGD/001/A 500000108685
HARTING Customised Solutions D-32427 Minden	Type TB	Number 2133A7A8523XXX		Rev. A	Page 1/1

A3

Mouser Electronics

Authorized Distributor

Click to View Pricing, Inventory, Delivery & Lifecycle Information:

HARTING:

2133A7A8523200 2133A7A8523100 2133A7A8523150