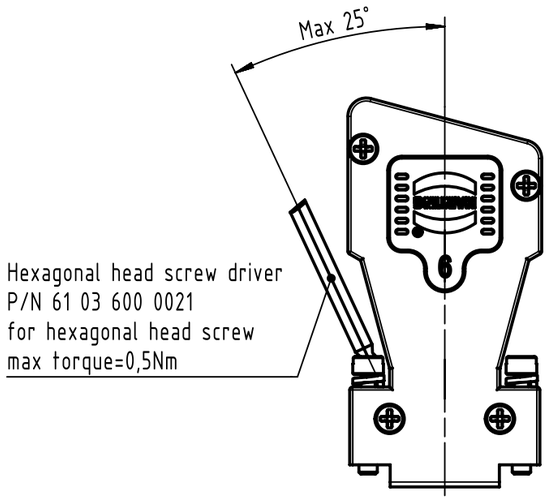

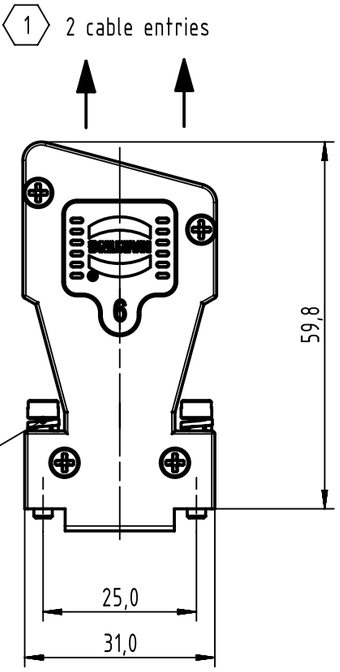

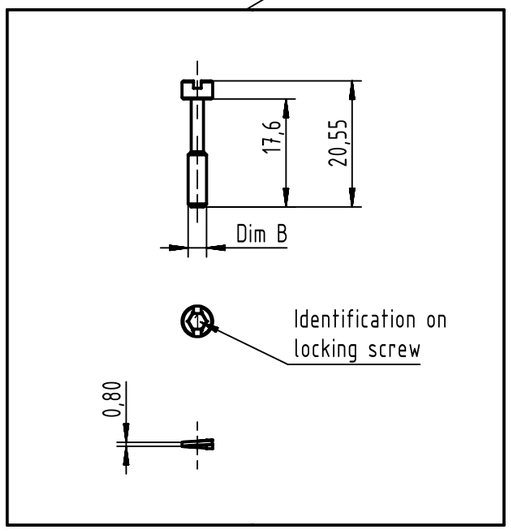

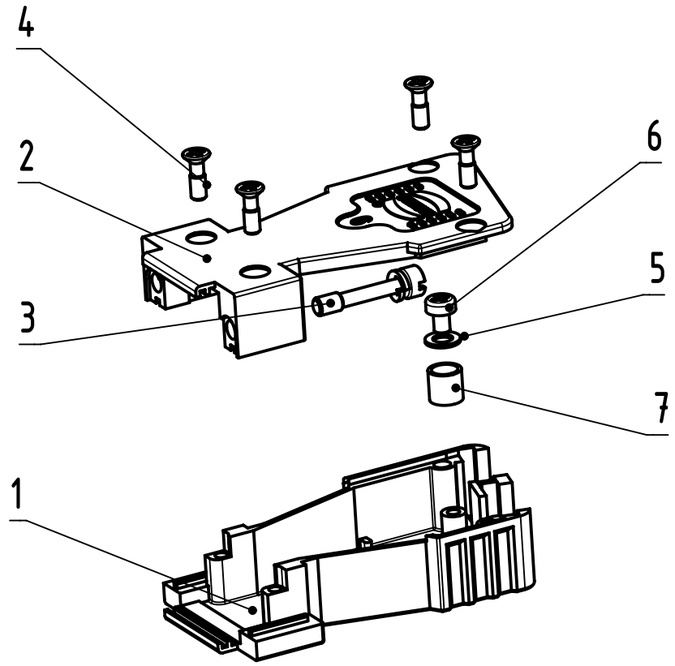

1 For strain relief an additional InduCom cable clamp or a crimp flange and ferrule combination depending on the cable is necessary

Content InduCom hood			Spare parts (MOQ100)	
Pos.	Quantity	Description	Part Number	Quantity
01	1	metal hood		
02	1	metal cover		
03	2	locking screw (assembled):		
		or hexagonal M3 with captive washer (for 0347)	0967 002 9019	1
		or hexagonal 4-40 UNC with captive washer (for 0346)	0967 002 9020	1
04	4	cover screw M2,5 with philips head (not losable in cover)	0963 002 0006	1
05	1	flat washer (not assembled) for securing the PCB	0963 002 0022	1
06	1	grounding screw (not assembled)	0963 002 0007	1
07	1	sleeve for securing the PCB	0963 002 0026	1

6667 009 034X			
6667 009 0347	M3	Hexagonal screw with captive washer	1
6667 009 0346	4-40 UNC	Hexagonal screw with captive washer	3
Part Number	Dim B screw size	Screw type	Identification for locking screw

All Dimensions in mm
Original Size DIN A3

Scale 1:1

Free size tol.

Ref.

Sub.

All rights reserved

Department EL PD

HARTING Electronics GmbH
D-32339 Espelkamp

Created by SHENGJ | Inspected by WANGSTE | Standardisation HOFFMANN | Date 2019-07-18 | State Final Release

Title InduCom PCB 9P hood assembly with two 15° cable entries

Doc-Key / ECM-Nr. 100719134/UGD/000/A 500000155113

Type TB | Number 6667009034X | Rev. A | Page 1/1

A3

Mouser Electronics

Authorized Distributor

Click to View Pricing, Inventory, Delivery & Lifecycle Information:

HARTING:
66670090346 66670090347