05. Subminiature D Connectors

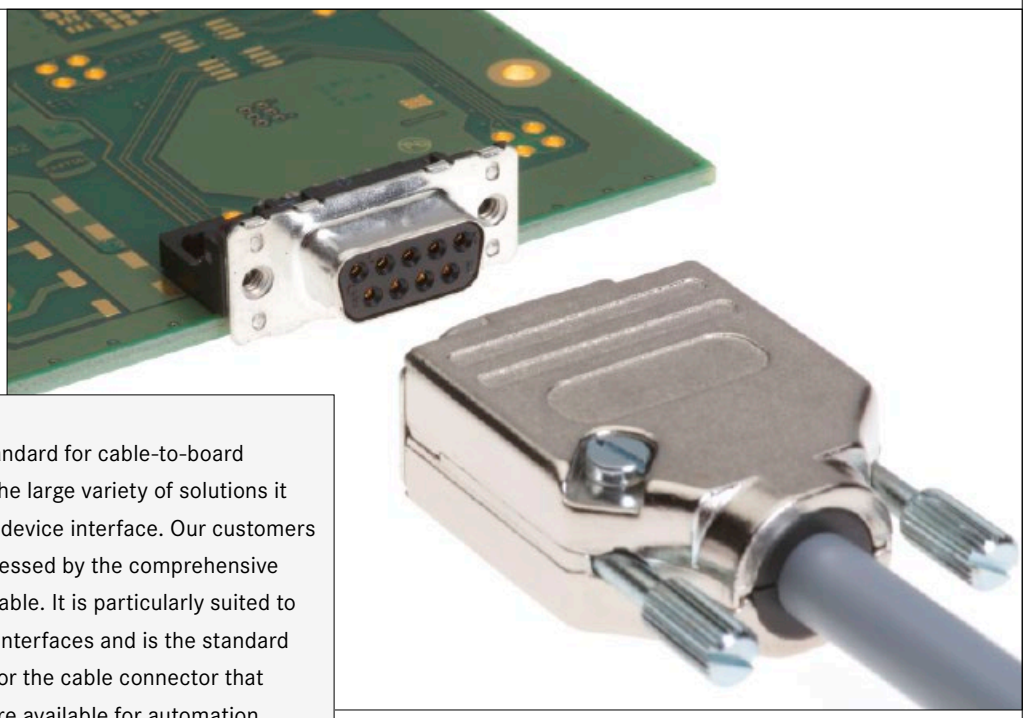

D-Sub connectors are an Industry Standard for cable-to-board connectivity applications. Thanks to the large variety of solutions it offers, it can be universally used as a device interface. Our customers manufacturing requirements are addressed by the comprehensive range of PCB termination styles available. It is particularly suited to configuring communication and data interfaces and is the standard for many fieldbus profiles. Solutions for the cable connector that can be easily assembled in the field are available for automation applications.

Application profile:

CONNECTION TYPE		ENVIRONMENT		APPLICATION						
Board to Board	Cable/ Wire to Board	IP20	IP65 / IP67	Data	Signal	Power	high performance			
							Data transfer rate	Shielding	Number of contacts, contact density	Voltage, working current
●	●	●	●	●	●	●		●	●	●

Cable termination

Han-Quick Lock®

IDC

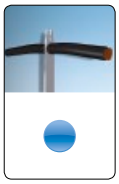

●

Crimp

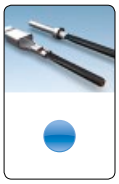

●

Screw

Cage clamp

Axial screw

PCB termination

THT

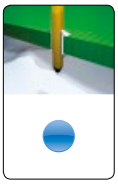

●

SMC

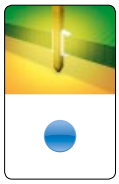

●

SMT

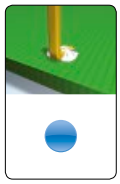

●

Press-in

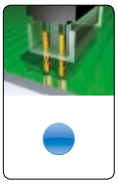

●

Application standard

PROFIBUS

DeviceNet

CANopen

Housing integration

Separate housing

Integrated housing

Contents

	Page
D-Sub connector system – introduction	**05.02**
D-Sub Standard connectors (D-Sub – S)	**05.04**
D-Sub High Density connectors (D-Sub – HD)	**05.38**
D-Sub Mixed connectors (D-Sub – M)	**05.50**
D-Sub Filter connectors (D-Sub – F)	**05.90**
D-Sub Waterproof IP67 connectors (D-Sub – W)	**05.116**
D-Sub Housing range (D-Sub – H) and accessories	**05.140**
D-Sub Standard press-in connectors	**05.171**
D-Sub Standard SMC connectors	**05.176**
D-Sub Standard SMT connectors	**05.184**
Cables for insulation displacement termination and cable assemblies	**05.194**

Tooling see chapter 20

05. Subminiature D Connectors

In the automation industry, the Subminiature D connectors are the standard interfaces for data, signal and service/programmer interfaces. The extensive HARTING product range allows the set up of all Subminiature D interfaces common in the industry, such as for field buses (PROFIBUS, CanOpen and DeviceNet), while the connectors are also available in optional plastic and metal housings with IP20 and IP65 / IP 67 protection.
In addition to the comprehensive range of Standard connectors with 9 to 50 straight, right-angled or US foot print style contacts, HARTING offers other product ranges which extend the application field of Subminiature D connectors considerably.

Depending on the product family, various termination techniques can be supplied such as press-in, solder, SMC or SMT to match the customer's termination process.
In addition, a wide range of hoods and accessories complete the cable connector range to fulfil all kinds of requirements such as EMC, IP65 / IP67 etc.
For the cabling HARTING provides cable assemblies for standard applications like fieldbus, cable or customized solutions.

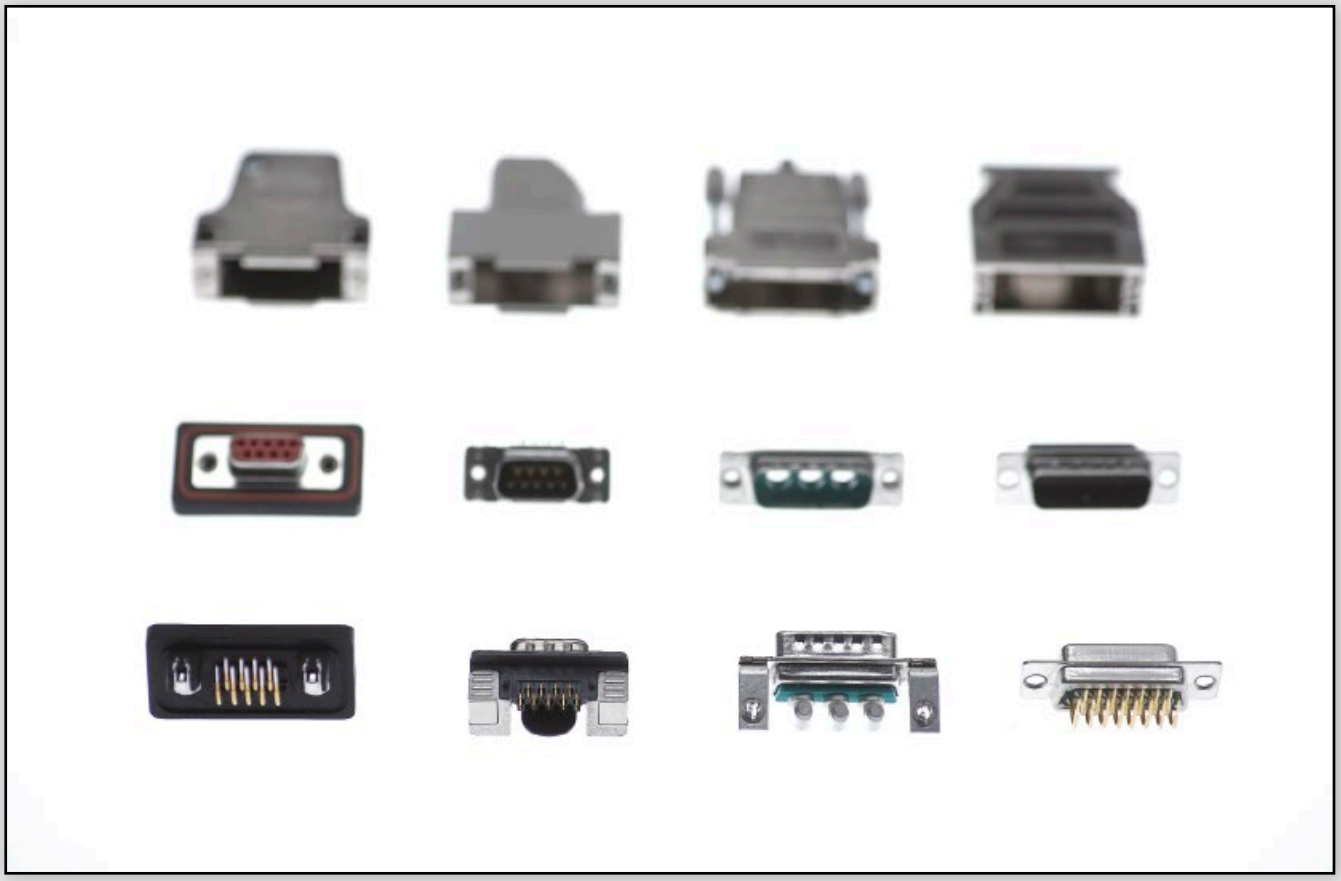

Specific features of the product range

D-SUB – MIXED CONNECTORS
with nearly 20 different contact arrangements offering versatile options for mixing power, coaxial, high voltage, signal and even pneumatic contacts in one connector.

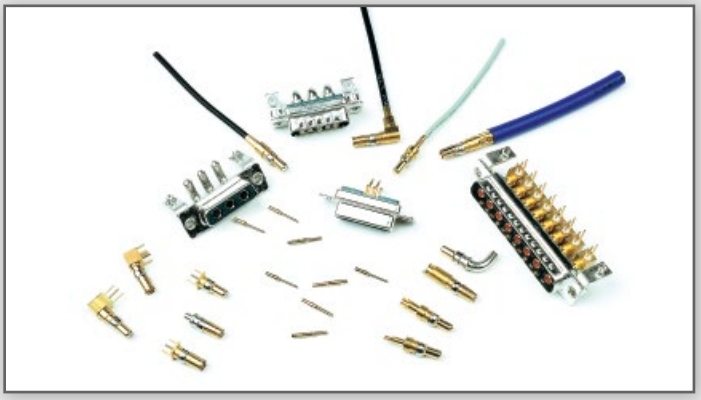

D-SUB – WATERPROOF
IP65 / IP67 connectors with 9 to 50 contacts for panel mount to PCB or cable.

D-SUB – FILTER CONNECTORS
with 9 to 37 contacts and integrated, different filter designs, like C, L or Pi types.

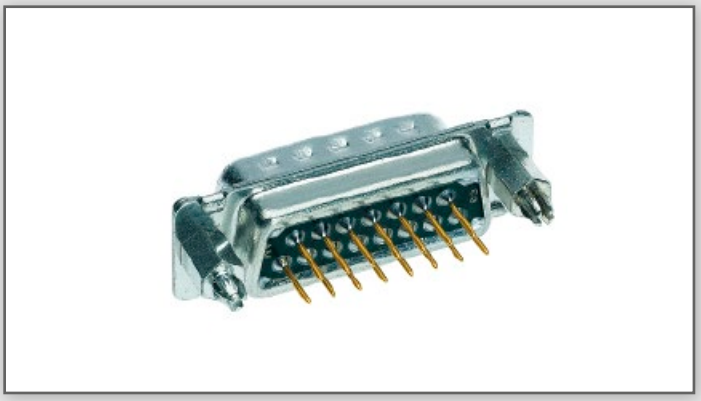

D-SUB – HIGH DENSITY CONNECTORS
with 15 to 78 straight and right-angled contacts, exceeding the contact capacity of the standard Subminiature D connectors by 70 %.

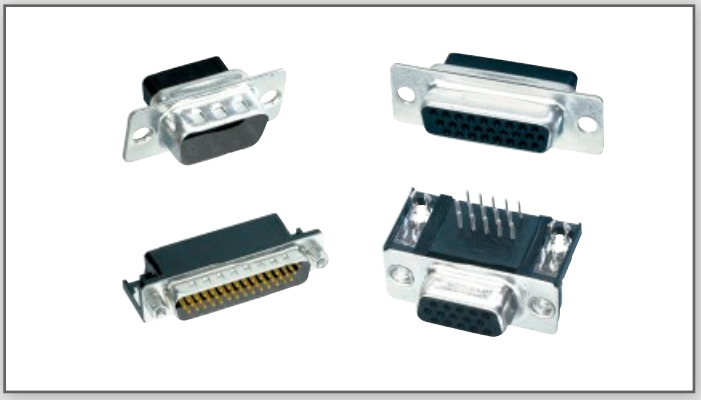

Number of contacts	9, 15, 25, 37, 50 UL recognized
Working current see current carrying capacity chart Turned contacts Stamped contacts	 7.5 A max. 6.5 A max.
Test voltage $U_{r.m.s.}$	1 kV
Clearance and creepage	≥ 1.0 mm
Contact resistance **Insulation resistance**	≤ 10 mΩ ≥ 10^{10} Ω
Temperature range The higher temperature limit includes the local ambient and heating effect of the contacts under load	-55 °C … +125 °C
Terminations	a) Solder pins Ø 0.6 mm for P.C.B. holes Ø 0.8/1 mm b) Solder pins, angled 90° Ø 0.6 mm for P.C.B. holes Ø 1 mm
Materials Mouldings and hoods Contacts	 Thermoplastic resin, glass-fibre filled (PBTP), UL 94-V0 Copper alloy
Contact surface Contact zone Metal shell	 selectively plated according to performance level[1)] Plated steel
Insertion and withdrawal force Connector on P.C.B. Solder, straight with clips – insertion max. per connector: – withdrawal min. per connector:	 60 N 10 N
Mating force 9 way 15 way 25 way 37 way 50 way	 ≤ 30 N ≤ 50 N ≤ 83 N ≤ 123 N ≤ 167 N

Current carrying capacity

The current carrying capacity is limited by maximum temperature of materials for inserts and contacts including terminals.
The current capacity-curve is valid for continuous, not interrupted current-loaded contacts of connectors when simultaneous power on all contacts is given, without exceeding the maximum temperature.

Control and test procedures according to DIN IEC 60 512.

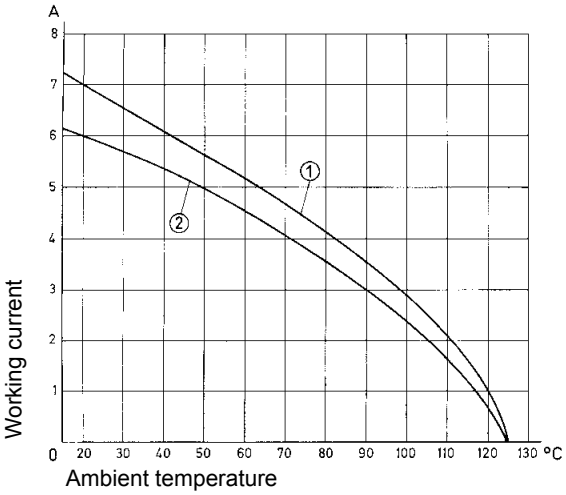

Example: 25 way connector
① Turned contacts
② Stamped contacts

Contact arrangement View from termination side

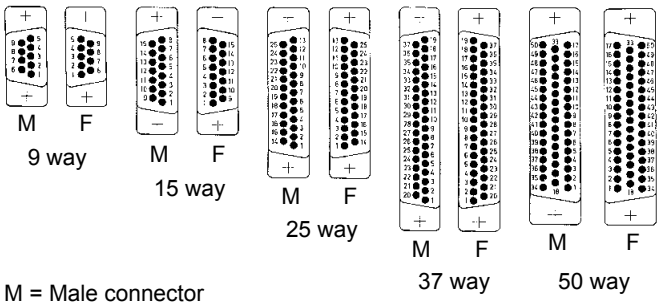

M = Male connector
F = Female connector

Mating conditions as per DIN 41 652

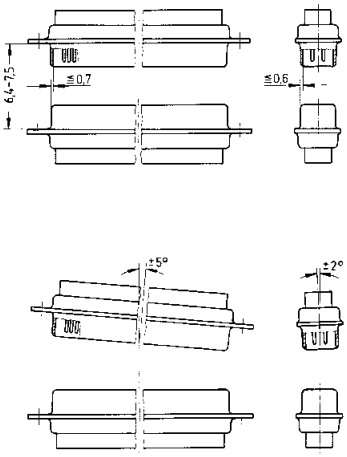

[1)] Performance level 3, 50 mating cycles, no gas test
Performance level 2 as per CECC 75 301-802, 250 mating cycles, 4 days 4 mixed gas test – IEC 60 512
Performance level 1 as per CECC 75 301-802, 500 mating cycles, 10 days 4 mixed gas test – IEC 60 512

Notes

Number of contacts

9–50

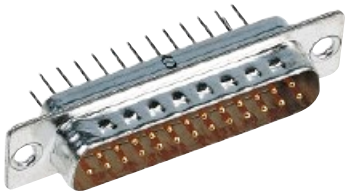

Turned solder pins, straight

Identification	No. of contacts	Part number	
Performance levels Explanations see page 05.04 Other performance levels on request		Performance level 3	Performance level 2
Male connector metal shell with dimples	9	09 67 009 5654	09 67 009 5655
	15	09 67 015 5654	09 67 015 5655
	25	09 67 025 5654	09 67 025 5655
	37	09 67 037 5654	09 67 037 5655
	50	09 67 050 5654[1)]	09 67 050 5655[1)]
Female connector metal shell	9	09 67 009 4754	09 67 009 4755
	15	09 67 015 4754	09 67 015 4755
	25	09 67 025 4754	09 67 025 4755
	37	09 67 037 4754	09 67 037 4755
	50	09 67 050 4754[1)]	09 67 050 4755[1)]

Male connector

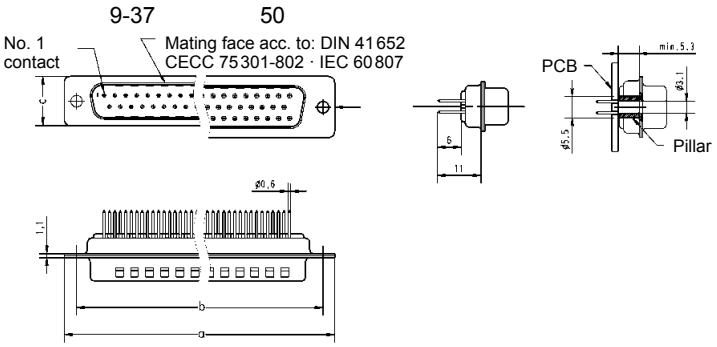

Female connector

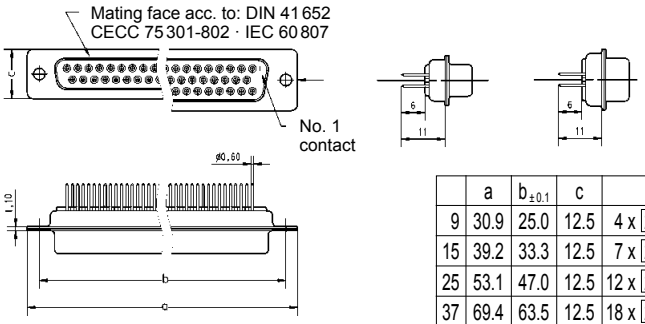

	a	$b_{\pm 0.1}$	c	g	h
9	30.9	25.0	12.5	4 x 2.74 = 10.96	3 x 2.74 = 8.22
15	39.2	33.3	12.5	7 x 2.74 = 19.18	6 x 2.74 = 16.44
25	53.1	47.0	12.5	12 x 2.76 = 33.12	11 x 2.76 = 30.36
37	69.4	63.5	12.5	18 x 2.76 = 49.68	17 x 2.76 = 46.92
50	67.0	61.1	15.4	16 x 2.76 = 44.16	15 x 2.76 = 41.40

Board drillings

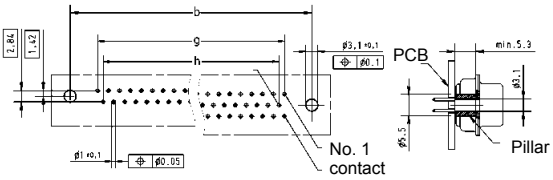

Dimensions in mm

[1)] Not normally kept in stock

Mating conditions see page 05.04

Number of contacts

9–50

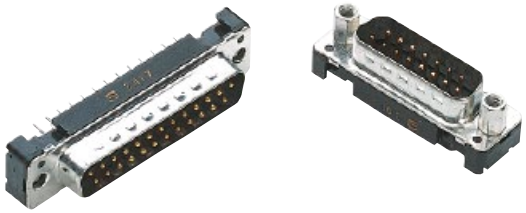

Turned solder pins, straight without grounding-pins

Identification	No. of contacts	Part number	
Performance levels ▶ Explanations see page 05.04 Other performance levels on request		Performance level 3	Performance level 2
Male connector metal shell with dimples			
	9	09 66 121 770 .	09 66 121 670 .
	15	09 66 221 770 .	09 66 221 670 .
	25	09 66 321 770 .	09 66 321 670 .
	37	09 66 421 770 .	09 66 421 670 .
	50	09 66 521 770 .	09 66 521 670 .
Please insert digit for flange thread or fitted female screw locks M3 ▶ 1			
4-40 UNC ▶ 2			
fitted screw locks 4-40 UNC ▶ 3			

available on request

D-Sub

Male connector

9-37 50

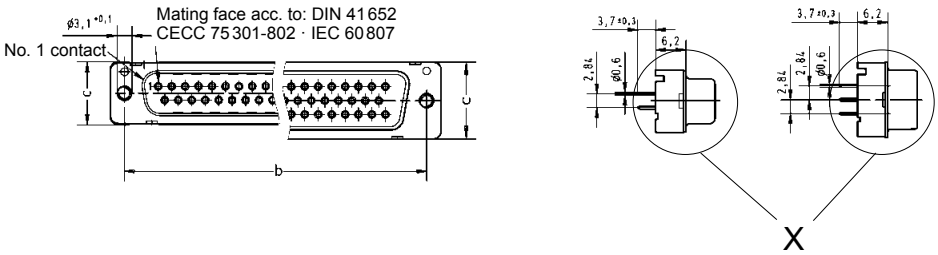

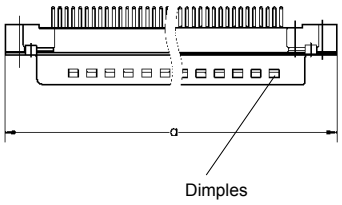

	a	$b_{\pm 0.1}$	c	g	h
9	30.9	25.0	12.9	4 x 2.74 = 10.96	3 x 2.74 = 8.22
15	39.2	33.3	12.9	7 x 2.74 = 19.18	6 x 2.74 = 16.44
25	53.1	47.0	12.9	12 x 2.76 = 33.12	11 x 2.76 = 30.36
37	69.4	63.5	12.9	18 x 2.76 = 49.68	17 x 2.76 = 46.92
50	67.0	61.1	15.7	16 x 2.76 = 44.16	15 x 2.76 = 41.40

Board drillings

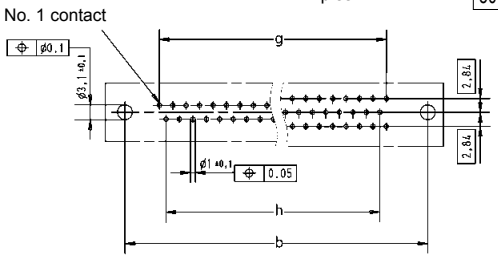

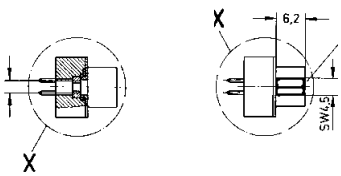

Dimensions in mm

Mating conditions see page 05.04

Number of contacts

9–50

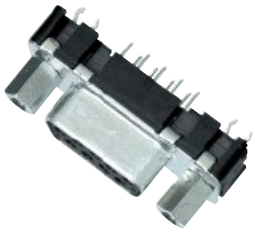

Stamped solder pins, straight with/without grounding board locks

Identification	No. of contacts	Part number	
Performance levels ▶ Explanations see page 05.04 Other performance levels on request		Performance level 3	Performance level 2
Male connector metal shell with dimples			
Without grounding board locks	9	09 65 121 770 .	09 65 121 670 .
	15	09 65 221 770 .	09 65 221 670 .
	25	09 65 321 770 .	09 65 321 670 .
	37	09 65 421 770 .	09 65 421 670 .
With grounding board locks	9	09 65 161 771 .	09 65 161 671 .
	15	09 65 261 771 .	09 65 261 671 .
	25	09 65 361 771 .	09 65 361 671 .
	37	09 65 461 771 .	09 65 461 671 .
Female connector metal shell			
Without grounding board locks	9	09 66 111 750 .	09 66 111 650 .
	15	09 66 211 750 .	09 66 211 650 .
	25	09 66 311 750 .	09 66 311 650 .
	37	09 66 411 750 .	09 66 411 650 .
	50	09 66 511 750 .	09 66 511 650 .
With grounding board locks	9	09 66 151 751 .	09 66 151 651 .
	15	09 66 251 751 .	09 66 251 651 .
	25	09 66 351 751 .	09 66 351 651 .
	37	09 66 451 751 .	09 66 451 651 .

Please insert digit for flange thread or fitted female screw locks

M3 ▶	1
4-40 UNC ▶	2
fitted screw locks 4-40 UNC ▶	3[1)]

[1)] Fitted screw locks 4-40 UNC not normally kept in stock for performance level 3

Connector dimensions see page 05.09. Mating conditions see page 05.04.

Number of contacts

9–50

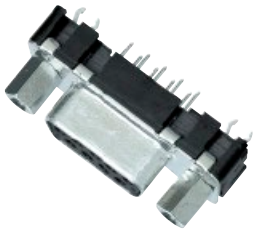

Stamped solder pins, straight with/without grounding board locks

Identification	Drawing	Dimensions in mm

Male connector
9 – 37 contacts

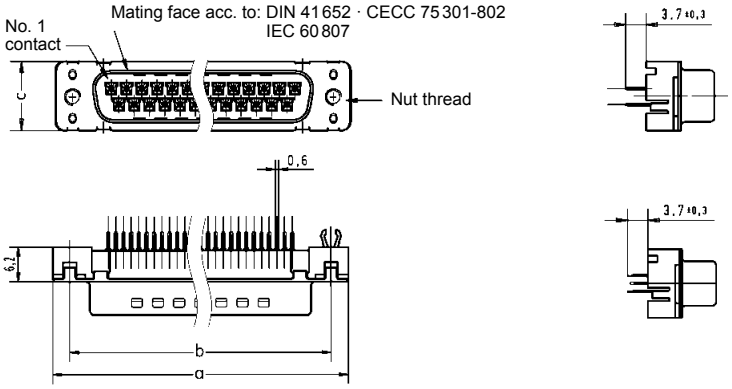

Female connector
9 – 37 contacts

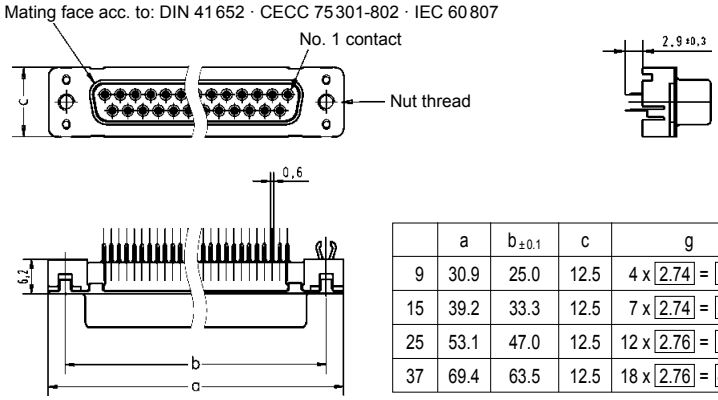

	a	$b_{\pm 0.1}$	c	g	h
9	30.9	25.0	12.5	4 x 2.74 = 10.96	3 x 2.74 = 8.22
15	39.2	33.3	12.5	7 x 2.74 = 19.18	6 x 2.74 = 16.44
25	53.1	47.0	12.5	12 x 2.76 = 33.12	11 x 2.76 = 30.36
37	69.4	63.5	12.5	18 x 2.76 = 49.68	17 x 2.76 = 46.92

Board drillings
9 – 37 contacts

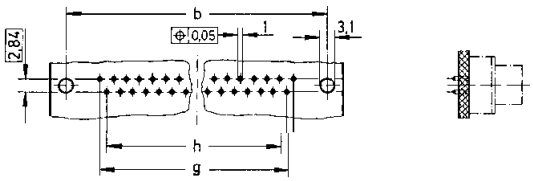

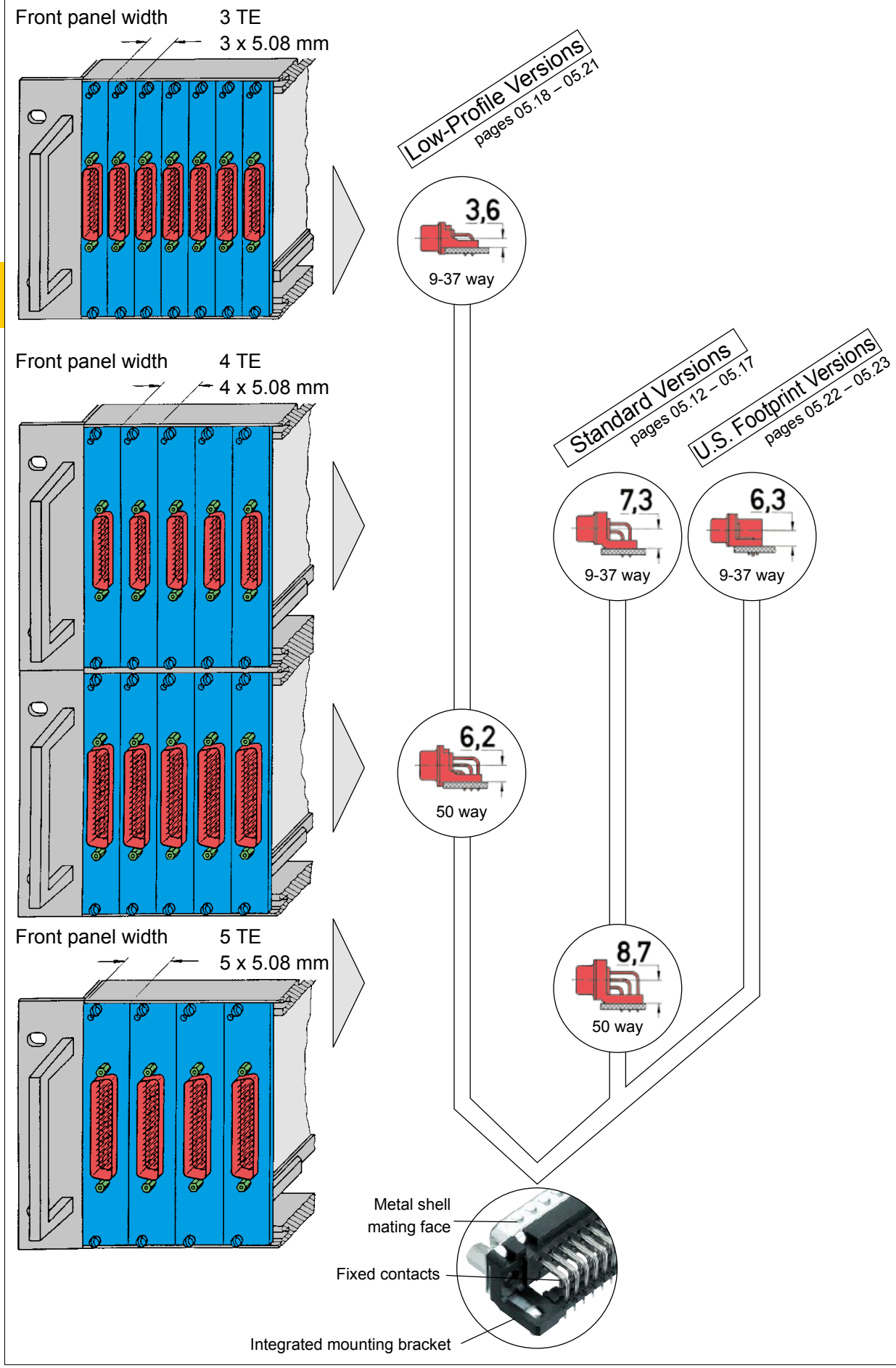
Front panel width 3 TE
3 x 5.08 mm
Front panel width 4 TE
4 x 5.08 mm
Front panel width 5 TE
5 x 5.08 mm
Low-Profile Versions
pages 05.18 – 05.21
Standard Versions
pages 05.12 – 05.17
U.S. Footprint Versions
pages 05.22 – 05.23
3,6
9-37 way
7,3
9-37 way
6,3
9-37 way
6,2
50 way
8,7
50 way
Metal shell mating face
Fixed contacts
Integrated mounting bracket

Advantages

All-round protective metal shell
- Polarisation
- Contact protection
- Plated shell
- Male connector with dimples

Plated terminations for increased solderability

Grounding contact riveted to metal shell

Integrated plastic mounting bracket

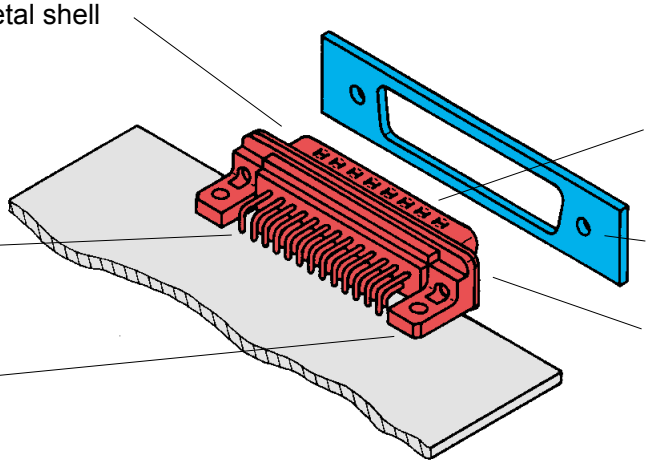

Contact surface finish to different performance levels

Panel

Different metal threads possible in flange area
- M3
- 4-40 UNC
- fitted female screw locks 4-40 UNC
- max. torque ≤ 0.8 Nm

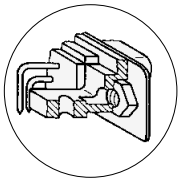

Mounting bracket

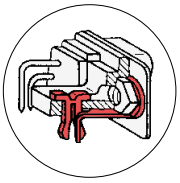

Mounting bracket
with snap-in-clips and grounding pin

Mounting height

Low-Profile Versions

The reduced mounting height of these connectors allow them to be used on the same PCB as DIN 41612 types with no loss of packaging density when card frames to DIN 41494 are used.

9-37 way connectors with 3.6 mm mounting height can be fitted to front panels of 3 TE (15.24 mm) width.

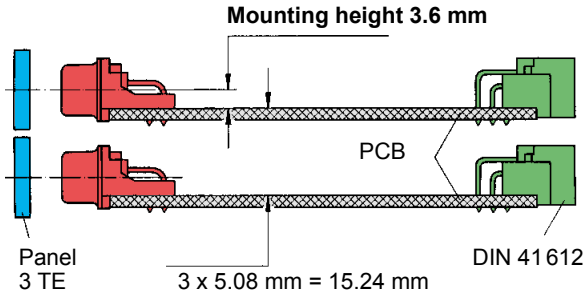

50 way connectors with 6.2 mm mounting height can be fitted to front panels of 4 TE (20.32 mm) width.

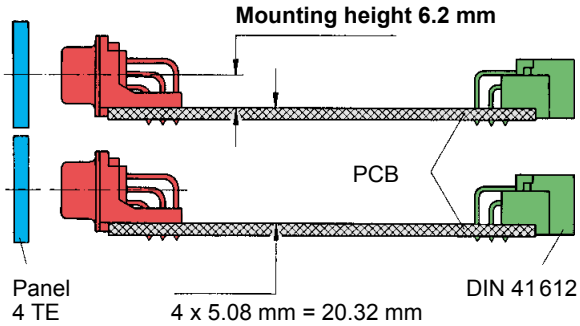

Standard Versions US Footprint

9-37 way connectors with 7.3 mm mounting height can be fitted to front panels of 4 TE (20.32 mm) width.

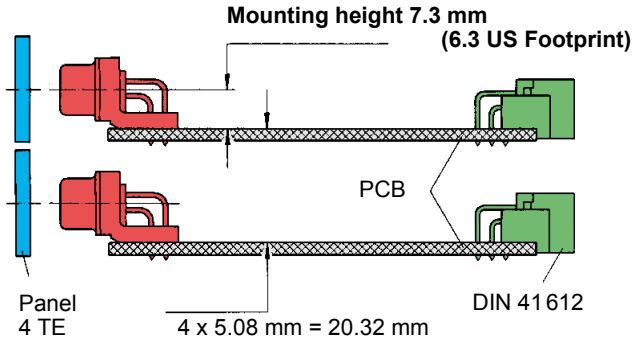

50 way connectors with 8.7 mm mounting height can be fitted to front panels of 5 TE (25.4 mm) width.

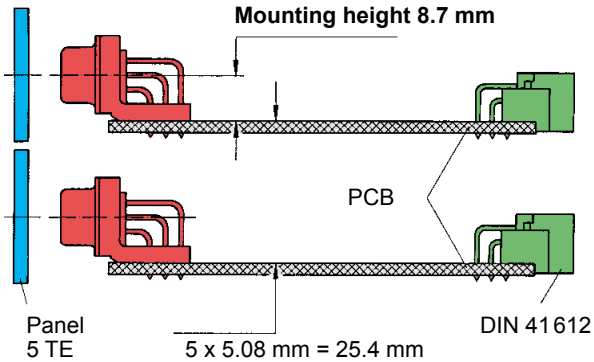

Number of contacts

9–37
50

Mounting height

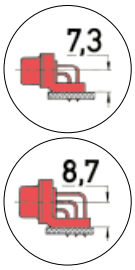

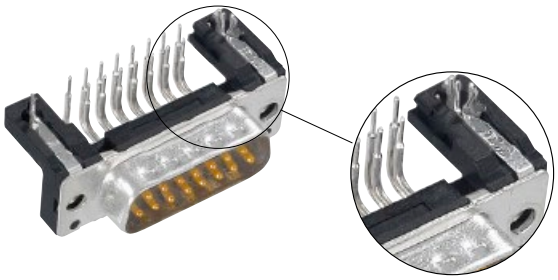

Standard Versions

Turned solder pins, angled with/without snap-in-clips and grounding board locks

Identification	No. of contacts	Part number	
Performance levels Explanations see page 05.04 Other performance levels on request		Performance level 3	Performance level 2
Male connector metal shell with dimples		2.84 mm pitch	2.84 mm pitch
With snap-in clips and grounding board locks	9	09 66 163 781 .	09 66 163 681 .
	15	09 66 263 781 .	09 66 263 681 .
	25	09 66 363 781 .	09 66 363 681 .
	37	09 66 463 781 .	09 66 463 681 .
	50	09 66 563 781 .	09 66 563 681 .
		2.54 mm pitch	2.54 mm pitch
available on request	9	09 66 162 781 .	09 66 162 681 .
	15	09 66 262 781 .	09 66 262 681 .
	25	09 66 362 781 .	09 66 362 681 .
	37	09 66 462 781 .	09 66 462 681 .
	50	09 66 562 781 .	09 66 562 681 .
		2.84 mm pitch	2.84 mm pitch
Without snap-in clips and grounding board locks	9	09 66 123 780 .	09 66 123 680 .
	15	09 66 223 780 .	09 66 223 680 .
	25	09 66 323 780 .	09 66 323 680 .
	37	09 66 423 780 .	09 66 423 680 .
	50	09 66 523 780 .	09 66 523 680 .
		2.54 mm pitch	2.54 mm pitch
available on request	9	09 66 122 780 .	09 66 122 680 .
	15	09 66 222 780 .	09 66 222 680 .
	25	09 66 322 780 .	09 66 322 680 .
	37	09 66 422 780 .	09 66 422 680 .
	50	09 66 522 780 .	09 66 522 680 .

Please insert digit for flange thread or fitted female screw locks

M3 ▶	1
4-40 UNC ▶	2
fitted screw locks 4-40 UNC ▶	3

Number of contacts

9–37
50

Mounting height

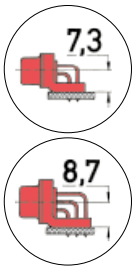

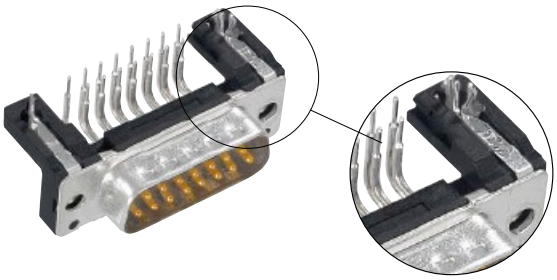

Standard Versions

Turned solder pins, angled with/without snap-in-clips and grounding board locks

Identification	Drawing	Dimensions in mm

Male connector

With snap-in clips
and grounding board locks

9-37 50

Mating face acc. to: DIN 41 652 · CECC 75 301-802 · IEC 60 807

No. 1 contact

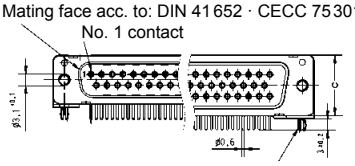

Grounding pins 0.2 x 0.6

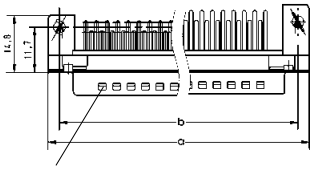

Dimples

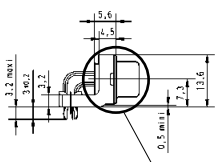

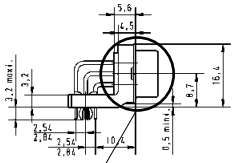

fitted screw locks
4 - 40 UNC

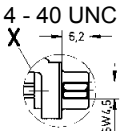

X

M3 or
4 - 40 UNC

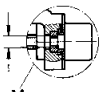

Without snap-in clips
and grounding board locks

9-37 50

Mating face acc. to: DIN 41 652 · CECC 75 301-802 · IEC 60 807

No. 1 contact

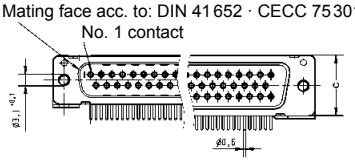

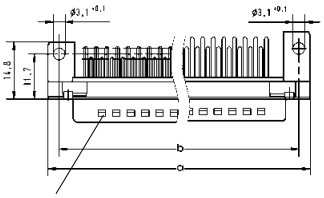

Dimples

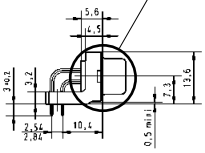

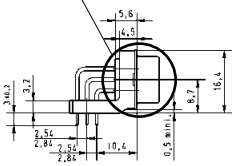

Board drillings

9-37 50

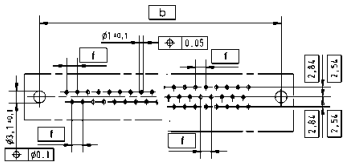

	a	$b_{\pm 0.1}$	c	f
9	30.90	25.00	12.90	2.74
15	39.20	33.30	12.90	2.74
25	53.10	47.00	12.90	2.76
37	69.40	63.50	12.90	2.76
50	67.00	61.10	15.70	2.76

Mating conditions see page 05.04
Mounting details see page 05.24

Number of contacts

9–37
50

Mounting height

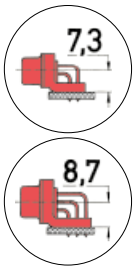

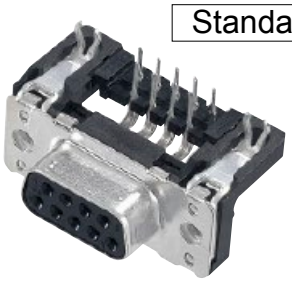

Standard Versions

Stamped solder pins, angled with grounding board locks

Identification	No. of contacts	Part number	
Performance levels Explanations see page 05.04 Other performance levels on request ▶		Performance level 3	Performance level 2
Male connector metal shell with dimples		2.84 mm pitch	2.84 mm pitch
	9	09 65 163 781 . [1]	09 65 163 681 . [1]
	15	09 65 263 781 . [1]	09 65 263 681 . [1]
	25	09 65 363 781 . [1]	09 65 363 681 . [1]
	37	09 65 463 781 . [1]	09 65 463 681 . [1]
		2.54 mm pitch	2.54 mm pitch
	9	09 65 162 781 .	09 65 162 681 .
	15	09 65 262 781 .	09 65 262 681 .
	25	09 65 362 781 .	09 65 362 681 .
	37	09 65 462 781 .	09 65 462 681 .
Female connector metal shell		2.84 mm pitch	2.84 mm pitch
	9	09 66 153 761 . [1]	09 66 153 661 . [1]
	15	09 66 253 761 . [1]	09 66 253 661 . [1]
	25	09 66 353 761 . [1]	09 66 353 661 . [1]
	37	09 66 453 761 . [1]	09 66 453 661 . [1]
		2.54 mm pitch	2.54 mm pitch
	9	09 66 152 761 .	09 66 152 661 .
	15	09 66 252 761 .	09 66 252 661 .
	25	09 66 352 761 .	09 66 352 661 .
	37	09 66 452 761 .	09 66 452 661 .
	50	09 66 552 761 . [1]	09 66 552 661 . [1]

Please insert digit for flange thread or fitted female screw locks

Ø 3.1 mm hole ▶	0[1]
M3 ▶	1
4-40 UNC ▶	2
fitted screw locks 4-40 UNC ▶	3

[1] Not normally kept in stock

Number of contacts

9–37
50

Mounting height

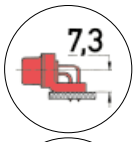

Standard Versions

Stamped solder pins, angled with grounding board locks

Identification	Drawing	Dimensions in mm

Male connector

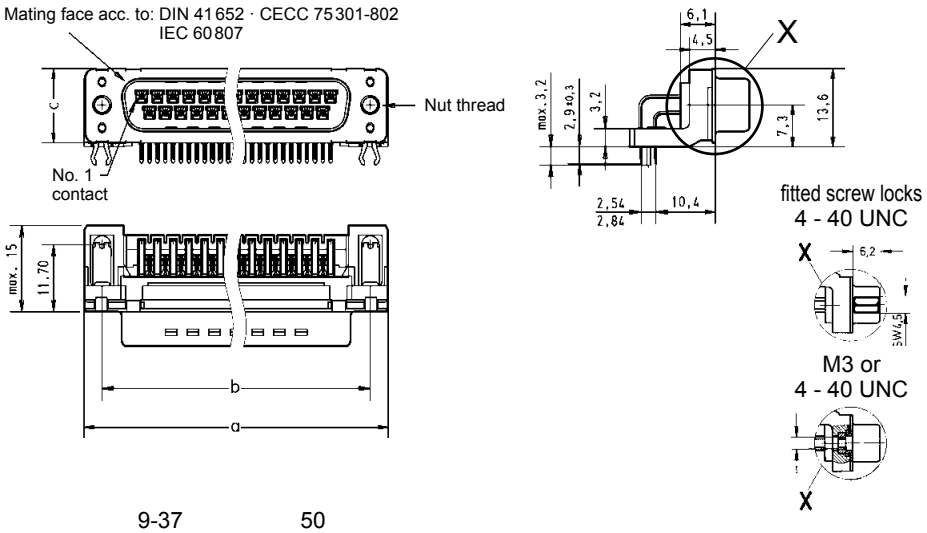

Female connector

9-37 50

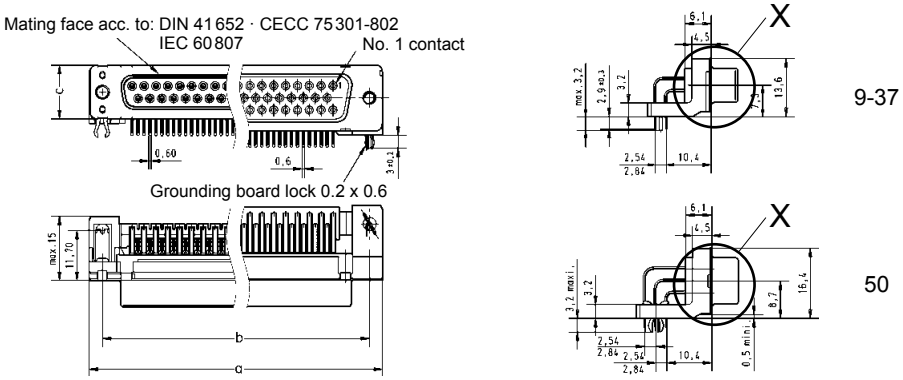

Board drillings

9-37 50

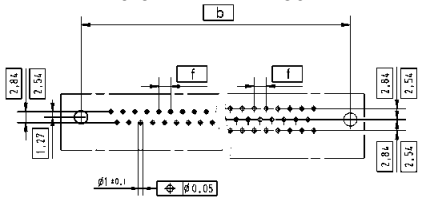

	a	$b_{\pm 0.1}$	c	f
9	30.90	25.00	12.50	2.74
15	39.20	33.30	12.50	2.74
25	53.10	47.00	12.50	2.76
37	69.40	63.50	12.50	2.76
50	67.00	61.10	15.40	2.76

Mating conditions see page 05.04
Mounting details see page 05.24

Number of contacts

9–37
50

Mounting height

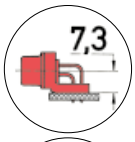

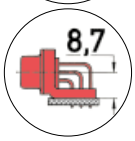

Standard Versions

Stamped solder pins, angled without grounding board locks

Identification	No. of contacts	Part number	
Performance levels ▶ Explanations see page 05.04 Other performance levels on request		Performance level 3	Performance level 2
Male connector metal shell with dimples			
		2.84 mm pitch	2.84 mm pitch
	9	09 65 123 780 . [1]	09 65 123 680 . [1]
	15	09 65 223 780 . [1]	09 65 223 680 . [1]
	25	09 65 323 780 . [1]	09 65 323 680 . [1]
	37	09 65 423 780 . [1]	09 65 423 680 . [1]
		2.54 mm pitch	2.54 mm pitch
	9	09 65 122 780 .	09 65 122 680 .
	15	09 65 222 780 .	09 65 222 680 .
	25	09 65 322 780 .	09 65 322 680 .
	37	09 65 422 780 .	09 65 422 680 .
Female connector metal shell			
		2.84 mm pitch	2.84 mm pitch
	9	09 66 113 760 . [1]	09 66 113 660 . [1]
	15	09 66 213 760 . [1]	09 66 213 660 . [1]
	25	09 66 313 760 . [1]	09 66 313 660 . [1]
	37	09 66 413 760 . [1]	09 66 413 660 . [1]
		2.54 mm pitch	2.54 mm pitch
	9	09 66 112 760 .	09 66 112 660 .
	15	09 66 212 760 .	09 66 212 660 .
	25	09 66 312 760 .	09 66 312 660 .
	37	09 66 412 760 .	09 66 412 660 .
	50	09 66 512 760 . [1]	09 66 512 660 . [1]

Please insert digit for flange thread or fitted female screw locks

Ø 3.1 mm hole ▶	0[1]
M3 ▶	1
4-40 UNC ▶	2
fitted screw locks 4-40 UNC ▶	3

[1] Not normally kept in stock

Number of contacts

9–37
50

Mounting height

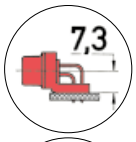

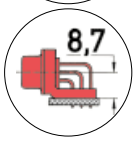

Standard Versions

Stamped solder pins, angled without grounding board locks

Identification	Drawing	Dimensions in mm

Male connector

Mating face acc. to: DIN 41 652 · CECC 75 301-802 · IEC 60 807

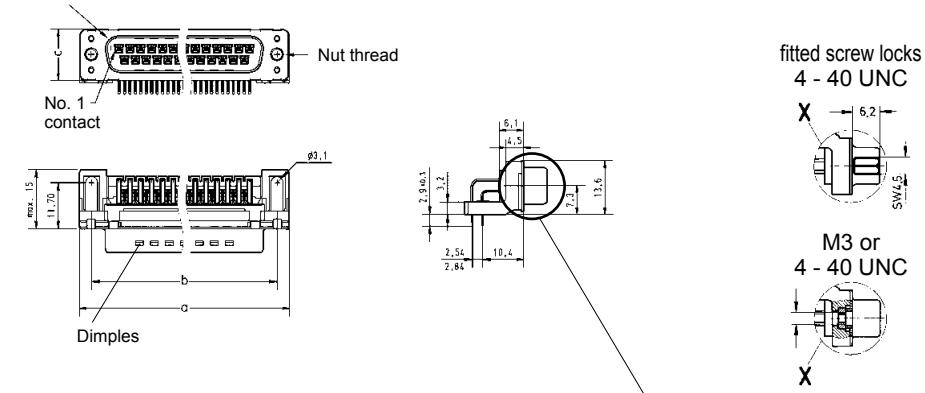

Female connector

9-37 50

Mating face acc. to: DIN 41 652 · CECC 75 301-802 · IEC 60 807

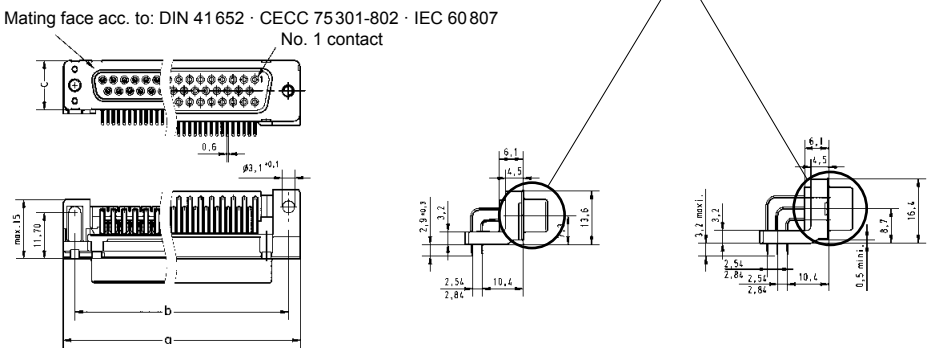

Board drillings

9-37 50

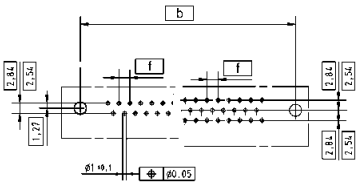

	a	$b_{\pm 0.1}$	c	f
9	30.90	25.00	12.50	2.74
15	39.20	33.30	12.50	2.74
25	53.10	47.00	12.50	2.76
37	69.40	63.50	12.50	2.76
50	67.00	61.10	15.40	2.76

Mating conditions see page 05.04
Mounting details see page 05.24

Number of contacts

9–37
50

Mounting height

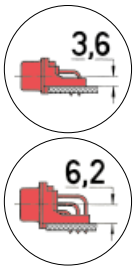

Low-Profile Versions

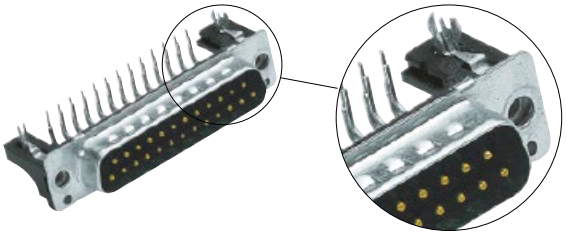

Turned solder pins, angled with snap-in-clips and grounding board locks

Identification	No. of contacts	Part number	
Performance levels ▶ Explanations see page 05.04 Other performance levels on request		Performance level 3	Performance level 2
Male connector metal shell with dimples		2.54 mm pitch	2.54 mm pitch
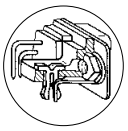	9	09 66 162 781 .	09 66 162 681 .
	15	09 66 262 781 .	09 66 262 681 .
	25	09 66 362 781 .	09 66 362 681 .
	37	09 66 462 781 .	09 66 462 681 .
	50	09 66 562 781 .	09 66 562 681 .
available on request			
Please insert digit for flange thread or fitted female screw locks			
M3 ▶ 5			
4-40 UNC ▶ 6			
fitted screw locks 4-40 UNC ▶ 7			

Number of contacts

9–37
50

Mounting height

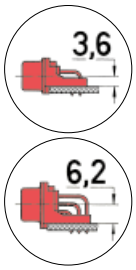

Low-Profile Versions

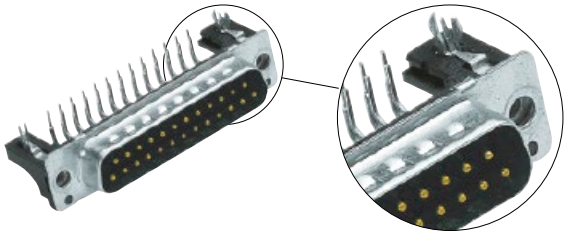

Turned solder pins, angled with snap-in-clips and grounding board locks

Identification	Drawing	Dimensions in mm

Male connector

9-37 50

Mating face acc. to: DIN 41 652 · CECC 75 301-802 · IEC 60 807

No. 1 contact

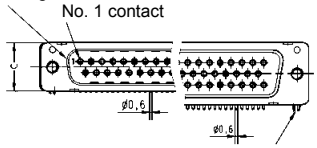

Grounding board lock 0.2 x 0.6

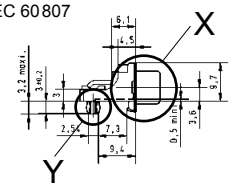

fitted screw locks
4 - 40 UNC

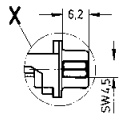

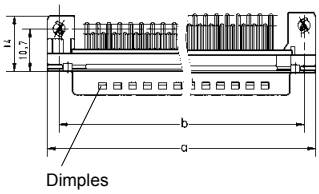

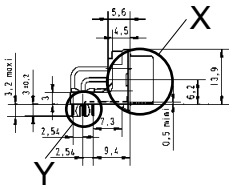

M3 or
4 - 40 UNC

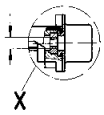

Board drillings

9-37 50

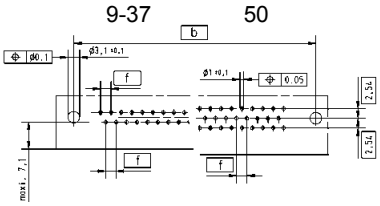

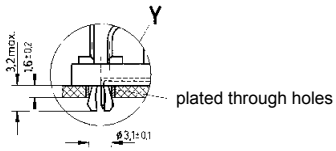

	a	$b_{\pm 0.1}$	c	f
9	30.90	25.00	12.50	2.74
15	39.20	33.30	12.50	2.74
25	53.10	47.00	12.50	2.76
37	69.40	63.50	12.50	2.76
50	67.00	61.10	15.70	2.76

Mating conditions see page 05.04
Mounting details see page 05.24

Number of contacts

9–37
50

Mounting height

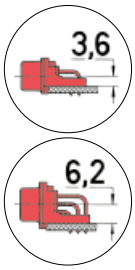

Low-Profile Versions

Stamped solder pins, angled with grounding board locks

Identification	No. of contacts	Part number	
Performance levels ▶ Explanations see page 05.04 Other contact surfaces on request		Performance level 3	Performance level 2
Male connector metal shell with dimples	9	09 65 162 781 .	09 65 162 681 .
	15	09 65 262 781 .	09 65 262 681 .
	25	09 65 362 781 .	09 65 362 681 .
	37	09 65 462 781 .	09 65 462 681 .
Female connector metal shell	9	09 66 152 761 .	09 66 152 661 .
	15	09 66 252 761 .	09 66 252 661 .
	25	09 66 352 761 .	09 66 352 661 .
	37	09 66 452 761 .	09 66 452 661 .
	50	09 66 552 761 . [1]	09 66 552 661 . [1]

Please insert digit for flange thread or fitted female screw locks

M3 ▶	5
4-40 UNC ▶	6
fitted screw locks 4-40 UNC ▶	7

[1] Not normally kept in stock

Number of contacts

9–37
50

Mounting height

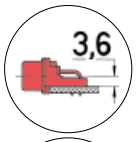

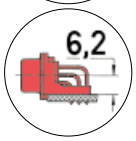

Low-Profile Versions

Stamped solder pins, angled with grounding board locks

Identification	Drawing	Dimensions in mm

Male connector

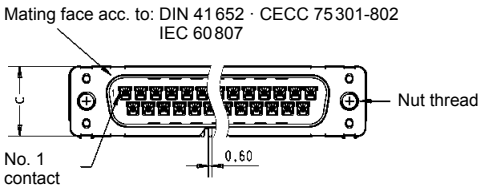

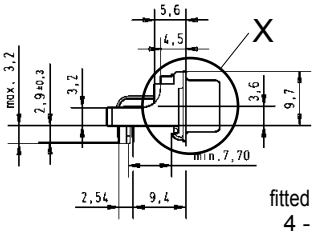

fitted screw locks
4 - 40 UNC

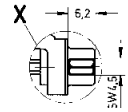

M3 or
4 - 40 UNC

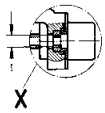

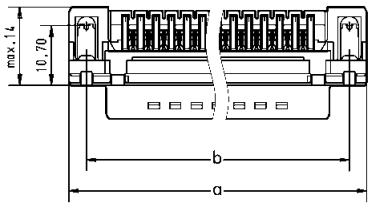

9-37 50

Female connector

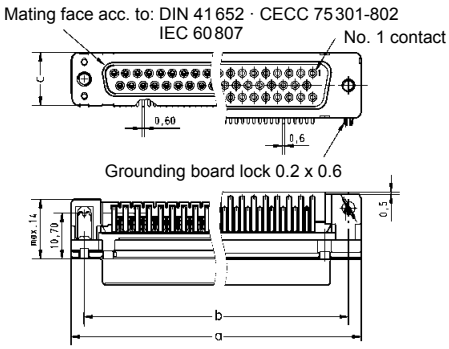

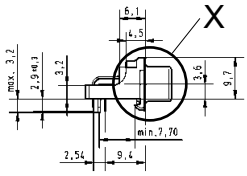

9-37

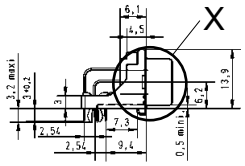

50

Board drillings

9-37 50

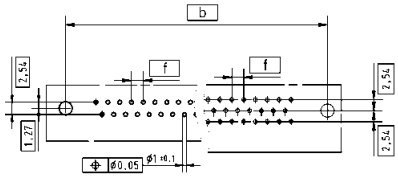

	a	$b_{\pm 0.1}$	c	f
9	30.90	25.00	12.50	2.74
15	39.20	33.30	12.50	2.74
25	53.10	47.00	12.50	2.76
37	69.40	63.50	12.50	2.76
50	67.00	61.10	15.40	2.76

Mating conditions see page 05.04
Mounting details see page 05.24

U.S. Footprint

Number of contacts

9–37

Mounting height

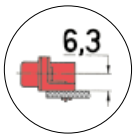

Stamped solder pins, angled with snap-in-clips and grounding board locks

Identification	No. of contacts	Part number	
Performance levels ▶ Explanations see page 05.04 Other performance levels on request		Performance level 3	S4[1]
Male connector metal shell with dimples		2.84 mm pitch	2.84 mm pitch
	9	09 68 163 781 .	09 68 163 581 .
	15	09 68 263 781 .	09 68 263 581 .
	25	09 68 363 781 .	09 68 363 581 .
	37	09 68 463 781 .	09 68 463 581 .
Female connector metal shell		2.84 mm pitch	2.84 mm pitch
	9	09 68 153 761 .	09 68 153 561 .
	15	09 68 253 761 .	09 68 253 561 .
	25	09 68 353 761 .	09 68 353 561 .
	37	09 68 453 761 .	09 68 453 561 .
Please insert digit for flange thread or fitted female screw locks			
M3 ▶ 1[2]			
4-40 UNC ▶ 2			
fitted screw locks 4-40 UNC ▶ 3			

[1] S4 = 0.76 µm (30 µinch) Au or PdNi equivalent
[2] Not normally kept in stock

U.S. Footprint

Number of contacts

9–37

Mounting height

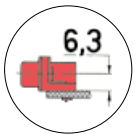

Stamped solder pins, angled with snap-in-clips and grounding board locks

Identification	Drawing	Dimensions in mm

Male connector

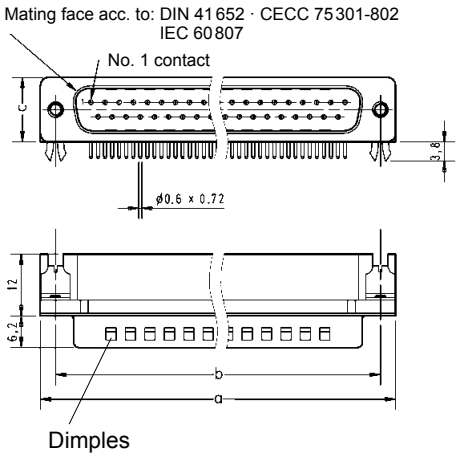

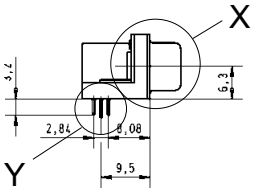

plated through holes

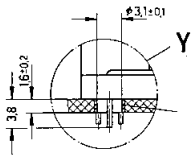

Female connector

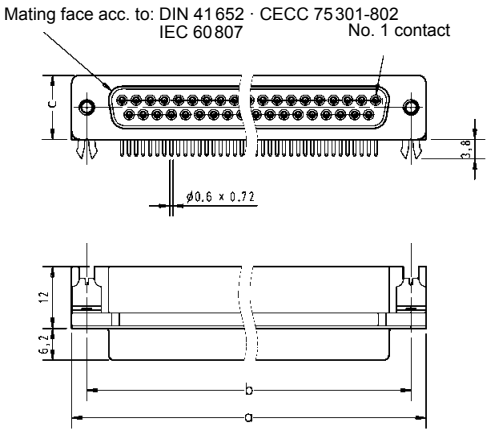

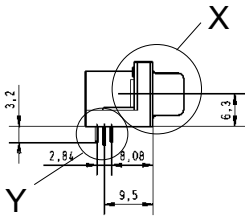

fitted screw locks
4 - 40 UNC

M3 or
4 - 40 UNC

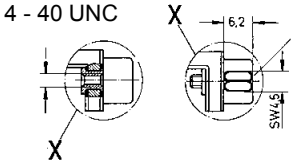

Board drillings

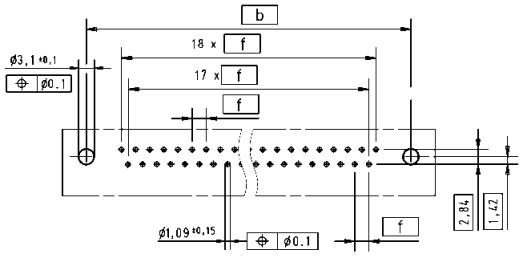

	a	$b_{\pm 0.1}$	c	f
9	30.90	25.00	12.55	2.77
15	39.20	33.30	12.55	2.77
25	53.10	47.00	12.55	2.77
37	69.40	63.50	12.55	2.77

Mating conditions see page 05.04
Mounting details see page 05.24

Identification	Drawing	Dimensions in mm

Standard Versions

Mounting height 7.3 mm

9-37 way
for front panel
4 units of width (TE)

Mounting height 8.7 mm

50 way
for front panel
5 units of width (TE)

for connectors see pages 05.12 – 05.17

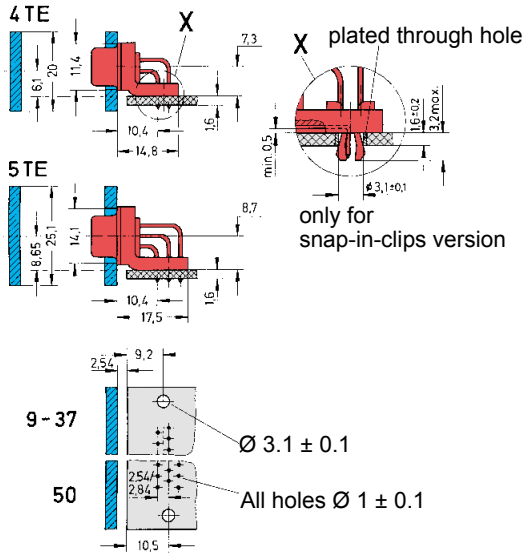

Low-Profile Versions

Mounting height 3.6 mm

9-37 way
for front panel
3 units of width (TE)

Mounting height 6.2 mm

50 way
for front panel
4 units of width (TE)

for connectors see pages 05.18 – 05.21

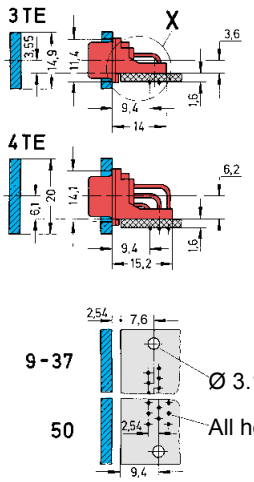

When used in a wave soldering process the mating face of the connector must be protected with adhesive tape.

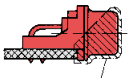

Adhesive tape

U.S. Footprint Versions

Mounting height 6.3 mm

9-37 way
for front panel
4 units of width (TE)

for connectors see pages 05.22 – 05.23

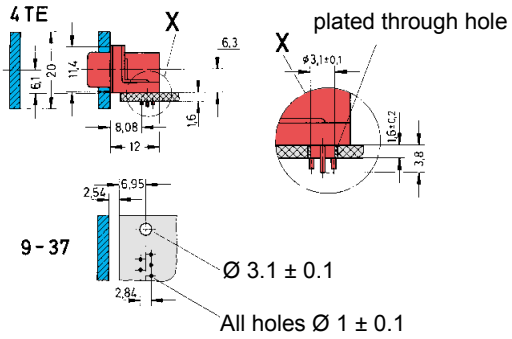

Panel cut out for front/rear mount

Values are taken from the CECC 75 301-802

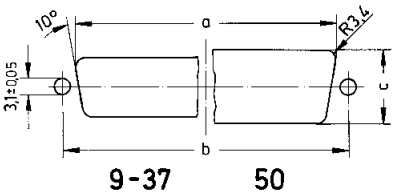

Front mount

	$a_{\pm 0.2}$	$b_{\pm 0.13}$	$c_{\pm 0.2}$
9	22.2	25.0	12.3
15	30.5	33.3	12.3
25	44.3	47.0	12.3
37	60.7	63.5	12.3
50	58.3	61.1	15.1

Rear mount

	$a_{\pm 0.2}$	$b_{\pm 0.13}$	$c_{\pm 0.2}$
9	20.5	25.0	11.4
15	28.8	33.3	11.4
25	42.5	47.0	11.4
37	59.1	63.5	11.4
50	56.3	61.1	14.1

Number of contacts	9, 15, 25, 37, 50 UL recognized
Working current see current carrying capacity chart Turned contacts Stamped contacts Insulation displacement	 7.5 A max. 6.5 A max. 2 A max.
Test voltage $U_{r.m.s.}$	1 kV
Clearance and creepage	≥ 1.0 mm ≥ 0.7 mm (insulation displacement)
Contact resistance **Insulation resistance**	≤ 10 mΩ ≥ 10^{10} Ω
Temperature range turned version stamped solder bucket version	 -55 °C … + 125 °C -40 °C … + 85 °C
Terminations	a) Solder buckets AWG 20 b) Stamped crimp contacts AWG 28-24 0.09-0.25 mm² max. insulation Ø 1.02 mm AWG 24-20 0.25-0.56 mm² max. insulation Ø 1.52 mm c) Turned crimp contacts AWG 22-18 0.33-0.82 mm² AWG 24-20 0.25-0.52 mm² AWG 26-22 0.13-0.33 mm² AWG 28-24 0.09-0.25 mm² max. insulation Ø 2.15 mm d) Insulation displacement AWG 28/7 and AWG 26/7
Materials Mouldings and hoods Contacts	 Thermoplastic resin, glass-fibre filled (PBTP), UL 94-V0 Copper alloy
Contact surface Contact zone Metal shell	 selectively plated according to performance level[1)] Plated steel
Mating force	9 way ≤ 30 N 15 way ≤ 50 N 25 way ≤ 83 N 37 way ≤ 123 N 50 way ≤ 167 N

Current carrying capacity

The current carrying capacity is limited by maximum temperature of materials for inserts and contacts including terminals. The current capacity-curve is valid for continuous, not interrupted current-loaded contacts of connectors when simultaneous power on all contacts is given, without exceeding the maximum temperature.

Control and test procedures according to DIN IEC 60 512.

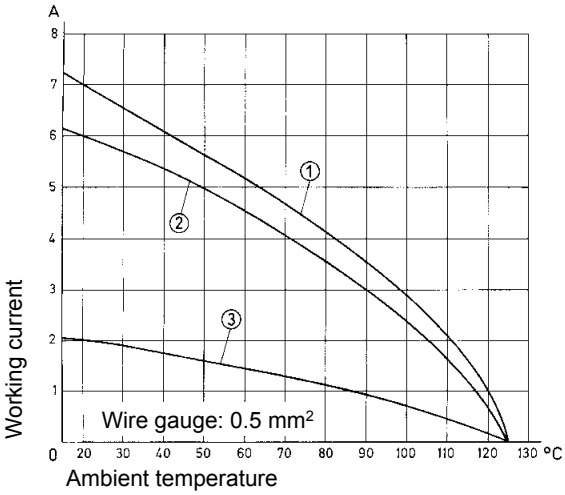

Example: 25 way connector
① Turned contacts
② Stamped contacts
③ Insulation displacement contacts

Contact arrangement View from termination side

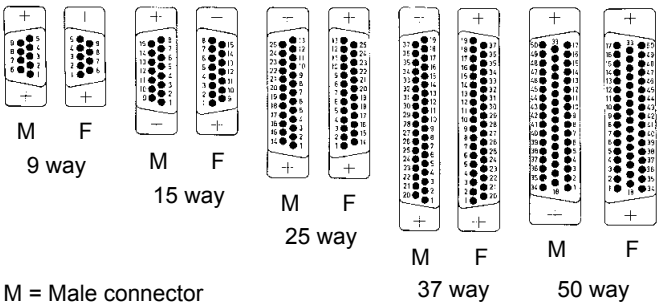

M = Male connector
F = Female connector

Mating conditions as per DIN 41 652

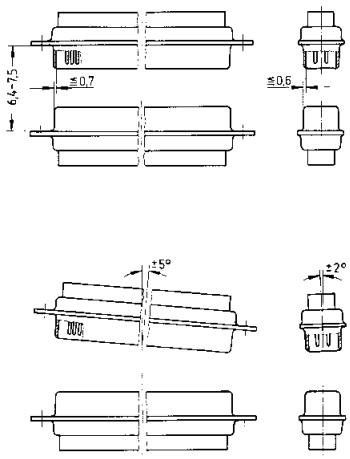

[1)] Performance level 3, 50 mating cycles, no gas test
Performance level 2 as per CECC 75 301-802, 250 mating cycles, 4 days 4 mixed gas test – IEC 60 512
Performance level 1 as per CECC 75 301-802, 500 mating cycles, 10 days 4 mixed gas test – IEC 60 512

Number of contacts

9–50

Crimp terminal

Identification	No. of contacts	Part number
Male connector Order contacts separately metal shell with dimples	9	09 67 009 5601
	15	09 67 015 5601
	25	09 67 025 5601
	37	09 67 037 5601
	50	09 67 050 5601
Female connector Order contacts separately metal shell	9	09 67 009 4701
	15	09 67 015 4701
	25	09 67 025 4701
	37	09 67 037 4701
	50	09 67 050 4701

Male connector

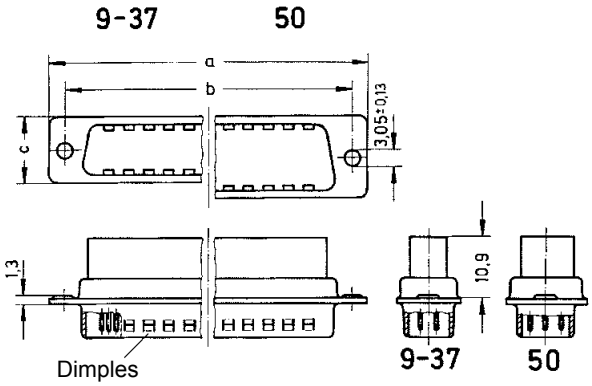

Female connector

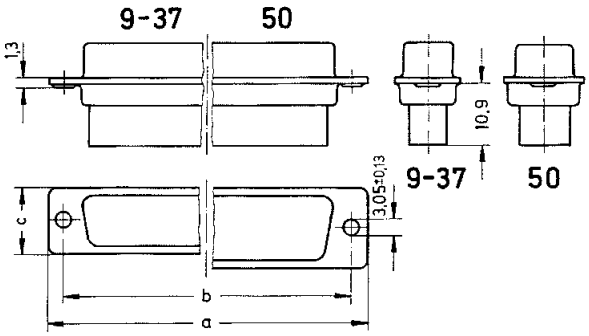

	a	$b_{\pm 0.1}$	c
9	30.9	25.0	12.5
15	39.2	33.3	12.5
25	53.1	47.0	12.5
37	69.4	63.5	12.5
50	67.0	61.1	15.4

Panel cut out
for front/rear mount

Values are taken from the CECC 75301-802

see page 05.24

Dimensions in mm

Tooling see chapter 20

Crimp contacts see pages 05.27 ff
Mating conditions see page 05.04

Turned crimp contacts

Identification	Wire gauge (mm²)	Part number		
		Male contacts	Female contacts	High-end female contacts
		Performance level 1*	Performance level 1*	Performance level 1*
Individual contacts[1)]	AWG 22-18 0.33-0.82	09 67 000 3576	09 67 000 3476	09 67 000 3676
	AWG 24-20 0.25-0.52	09 67 000 8576	09 67 000 8476	09 67 000 8676
	AWG 26-22 0.13-0.33	09 67 000 5576	09 67 000 5476	09 67 000 5676
	AWG 28-24 0.09-0.25	09 67 000 7576	09 67 000 7476	09 67 000 7676

[1)] Minimum order 100 pieces or multiples of 100

Male contacts

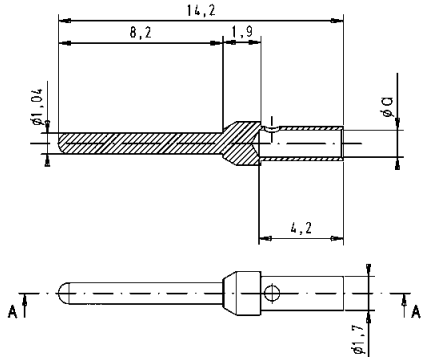

	a	groove
AWG 22-18	1.34	none
AWG 24-20	1.13	1
AWG 26-22	0.88	2
AWG 28-24	0.64	3

Female contacts

Standard

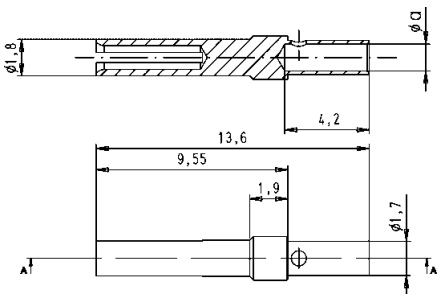

High-end with groove

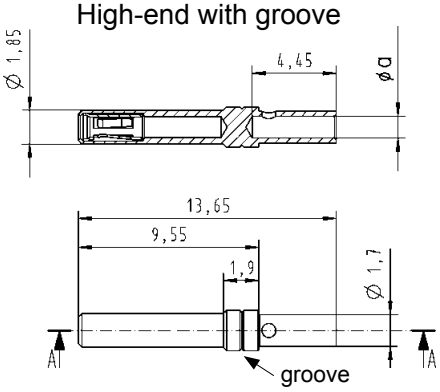

* Performance level 1 as per CECC 75 301-802, 500 mating cycles, 10 days 4 mixed gas test – IEC 60 512
Use crimp tool with the part no. 09 99 000 0501 and the locator with the part no. 09 99 000 0531. Details see chapter 20

Stamped crimp contacts

Identification	Wire gauge (mm²)	Part number		
Performance levels Explanations see page 05.04 Other performance levels on request		stamped male contacts		
		Performance level 3	Performance level 2	Performance level 1
Individual contacts	AWG 28-24 0.09-0.25 stranded	09 67 000 7177[1)]	09 67 000 7178[1)]	09 67 000 7176[1)]
500 pieces/reel Unrolling left		09 67 000 7167	09 67 000 7168	09 67 000 7166
10 000 pieces/reel Unrolling left Unrolling left reversed Unrolling right reversed		09 67 000 7157 09 67 000 7147 09 67 000 7137	09 67 000 7158 09 67 000 7148 09 67 000 7138	09 67 000 7156 09 67 000 7146 09 67 000 7136
Individual contacts	AWG 24-20 0.25-0.56 stranded	09 67 000 8177[1)]	09 67 000 8178[1)]	09 67 000 8176[1)]
500 pieces/reel Unrolling left		09 67 000 8167	09 67 000 8168	09 67 000 8166
10 000 pieces/reel Unrolling left Unrolling left reversed Unrolling right reversed		09 67 000 8157 09 67 000 8147 09 67 000 8137	09 67 000 8158 09 67 000 8148 09 67 000 8138	09 67 000 8156 09 67 000 8146 09 67 000 8136

Unrolling direction

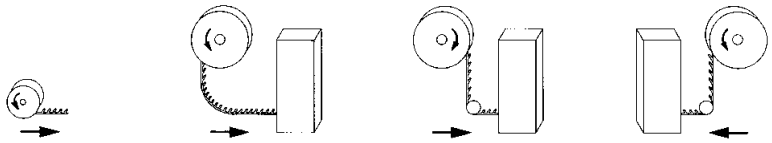

500 pieces/reel Unrolling left	10 000 pieces/reel Unrolling left	10 000 pieces/reel Unrolling left reversed	10 000 pieces/reel Unrolling right reversed

for HARTING tools

[1)] Minimum order 500 pieces or multiples of 500
Insertion and removal tool see chapter 20
Contact dimensions see page 05.29

Stamped crimp contacts

Identification	Drawing	Dimensions in mm

Male contacts

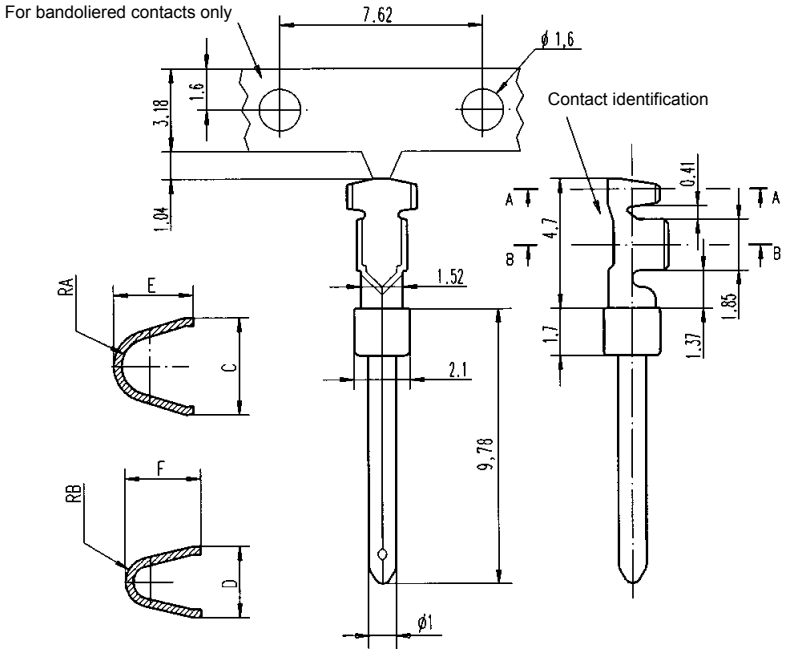

AWG	C	D	E	F	RA	RB	Contact identification
20-24	2.46	1.78	1.98	1.90	0.71	0.43	——
24-28	1.65	1.47	1.52	1.52	0.50	0.33	====

Stamped crimp contacts

Identification	Wire gauge (mm²)	Part number		
Performance levels Explanations see page 05.04 Other performance levels on request		stamped female contacts		
		Performance level 3	Performance level 2	Performance level 1
Individual contacts	AWG 28-24 0.09-0.25 stranded	09 67 000 7277[1)]	09 67 000 7278[1)]	09 67 000 7276[1)]
500 pieces/reel Unrolling left		09 67 000 7267	09 67 000 7268	09 67 000 7266
10 000 pieces/reel Unrolling left Unrolling left reversed Unrolling right reversed		09 67 000 7257 09 67 000 7247 09 67 000 7237	09 67 000 7258 09 67 000 7248 09 67 000 7238	09 67 000 7256 09 67 000 7246 09 67 000 7236
Individual contacts	AWG 24-20 0.25-0.56 stranded	09 67 000 8277[1)]	09 67 000 8278[1)]	09 67 000 8276[1)]
500 pieces/reel Unrolling left		09 67 000 8267	09 67 000 8268	09 67 000 8266
10 000 pieces/reel Unrolling left Unrolling left reversed Unrolling right reversed		09 67 000 8257 09 67 000 8247 09 67 000 8237	09 67 000 8258 09 67 000 8248 09 67 000 8238	09 67 000 8256 09 67 000 8246 09 67 000 8236

Unrolling direction

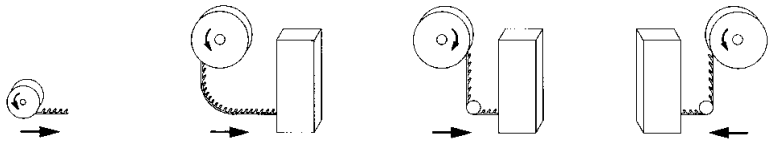

500 pieces/reel Unrolling left	10 000 pieces/reel Unrolling left	10 000 pieces/reel Unrolling left reversed	10 000 pieces/reel Unrolling right reversed

for HARTING tools

[1)] Minimum order 500 pieces or multiples of 500
Insertion and removal tool see chapter 20
Contact dimensions see page 05.31

Stamped crimp contacts

Identification	Drawing	Dimensions in mm

Female contacts

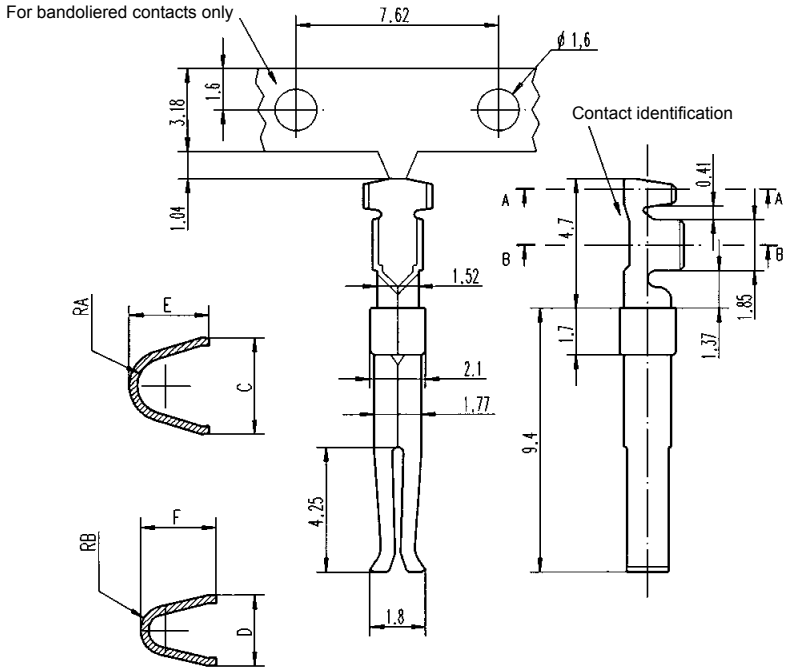

AWG	C	D	E	F	RA	RB	Contact identification
20-24	2.46	1.78	1.98	1.90	0.71	0.43	——
24-28	1.65	1.47	1.52	1.52	0.50	0.33	====

Number of contacts

9–37

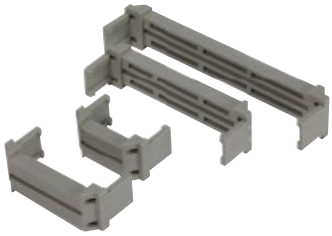

Insulation displacement termination

Identification	No. of contacts	Part number	
Performance levels ▶ Explanations see page 05.04 Other performance levels on request		Performance level 3	Performance level 2
Male connector[2)] pitch 1.27 mm metal shell with dimples	9	09 66 128 770 .	09 66 128 670 .
	15	09 66 228 770 .	09 66 228 670 .
	25	09 66 328 770 .	09 66 328 670 .
	37	09 66 428 770 .	09 66 428 670 .
Female connector pitch 1.27 mm metal shell	9	09 66 118 750 .	09 66 118 650 .
	15	09 66 218 750 .	09 66 218 650 .
	25	09 66 318 750 .	09 66 318 650 .
	37	09 66 418 750 .	09 66 418 650 .
Please insert digit for flange thread ø 3.1 mm hole ▶ 0 M3 ▶ 1[1)] 4-40 UNC ▶ 2			
Strain relief clamp plastic for male and female connector	9	09 66 108 0001	09 66 108 0001
	15	09 66 208 0001	09 66 208 0001
	25	09 66 308 0001	09 66 308 0001
	37	09 66 408 0001	09 66 408 0001

[1)] Not normally kept in stock
[2)] Not released for halogen free flat cables

Number of contacts

9–37

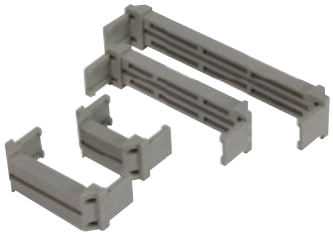

Insulation displacement termination

Identification	Drawing	Dimensions in mm

Male connector

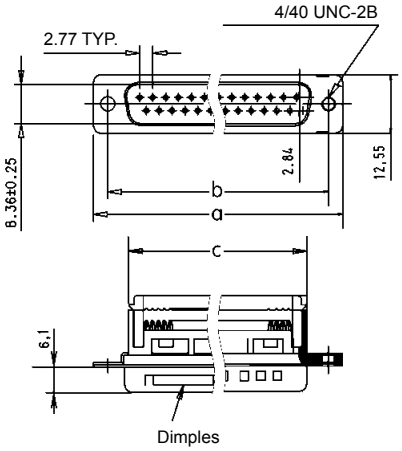

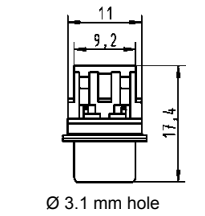

Female connector

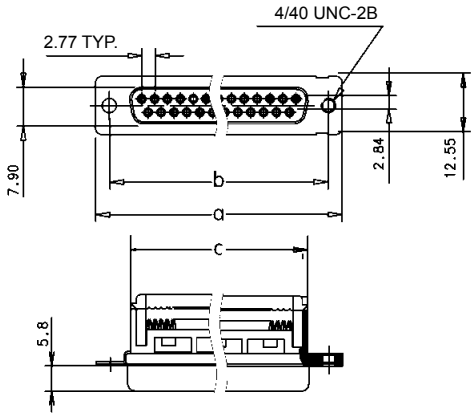

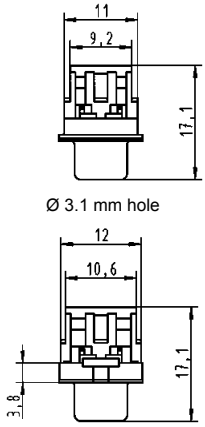

Male and female connectors

	a	$b_{\pm 0.1}$	c
9	30.8	24.99	16.5
15	39.2	33.32	24.3
25	53.1	47.04	38.1
37	69.4	63.50	54.9

Specified conductors
stranded wires – AWG 28/7
– AWG 26/7

Strain relief clamps

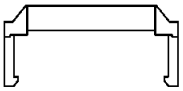

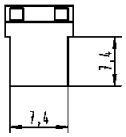

Top entry

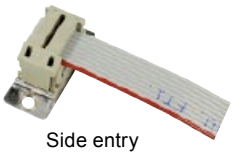

Side entry

Panel cut out for front/rear mount

Values are taken from the CECC 75 301-802

see page 05.24

Number of contacts

9–50

Solder buckets

Identification	No. of contacts	Part number	
Performance levels Explanations see page 05.04 Other performance levels on request		Performance level 3	Performance level 2
Male connector metal shell with dimples			
		turned contacts	turned contacts
	9	09 67 009 5604	09 67 009 5615
	15	09 67 015 5604	09 67 015 5615
	25	09 67 025 5604	09 67 025 5615
	37	09 67 037 5604	09 67 037 5615
	50	09 67 050 5604	09 67 050 5615
		stamped contacts	stamped contacts
	9	09 67 209 5604	09 67 209 5615
	15	09 67 215 5604	09 67 215 5615
	25	09 67 225 5604	09 67 225 5615
	37	09 67 237 5604	09 67 237 5615
	50	09 67 250 5604	09 67 250 5615
Female connector metal shell			
		turned contacts	turned contacts
	9	09 67 009 4704	09 67 009 4715
	15	09 67 015 4704	09 67 015 4715
	25	09 67 025 4704	09 67 025 4715
	37	09 67 037 4704	09 67 037 4715
	50	09 67 050 4704	09 67 050 4715
		stamped contacts	stamped contacts
	9	09 67 209 4704	09 67 209 4715
	15	09 67 215 4704	09 67 215 4715
	25	09 67 225 4704	09 67 225 4715
	37	09 67 237 4704	09 67 237 4715
	50	09 67 250 4704	09 67 250 4715

Number of contacts

9–50

Solder buckets

Identification	Drawing	Dimensions in mm

Male connector

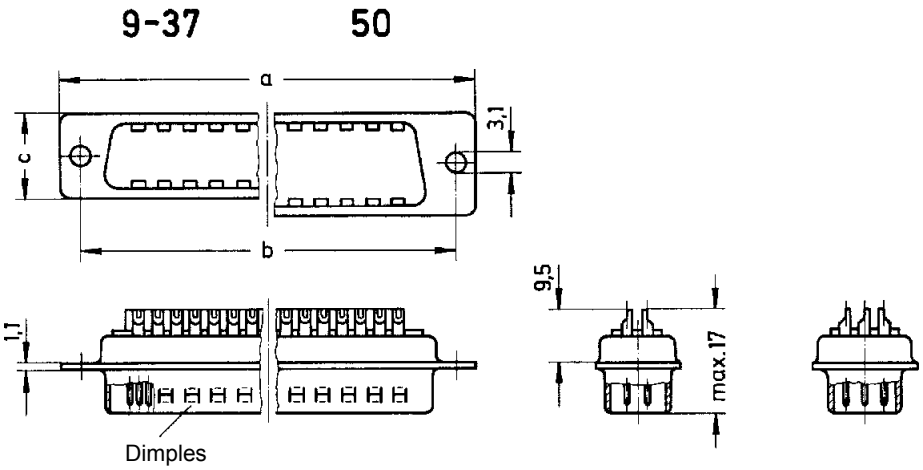

Female connector

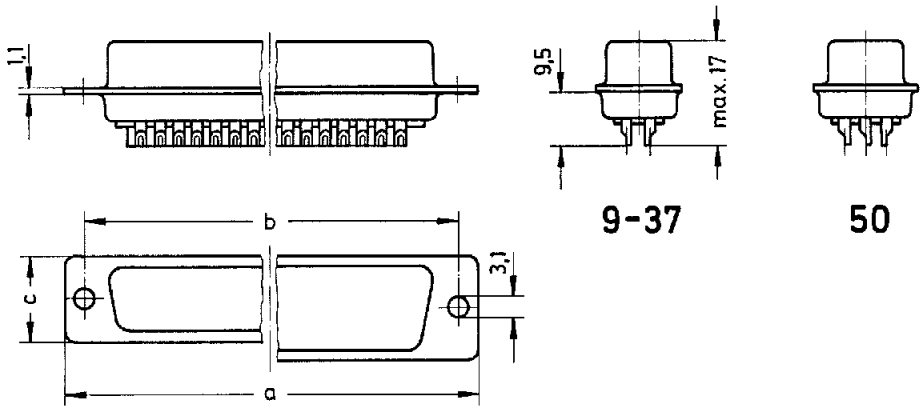

	a	$b_{\pm 0.1}$	c
9	30.9	25.0	12.5
15	39.2	33.3	12.5
25	53.1	47.0	12.5
37	69.4	63.5	12.5
50	67.0	61.1	15.4

Panel cut out
for front/rear mount

Values are taken from the CECC 75 301-802

see page 05.24

Mating conditions see page 05.04

Number of contacts

9–37

Gender changer

Identification	No. of contacts	Part number
Male / female gender changer	9	09 67 009 0605
	15	09 67 015 0605
	25	09 67 025 0605
	37	09 67 037 0605

Dimensions

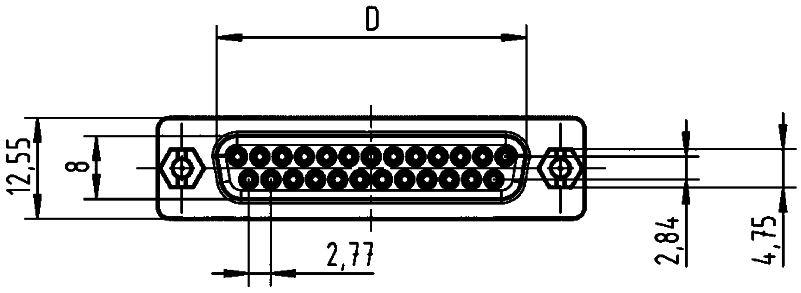

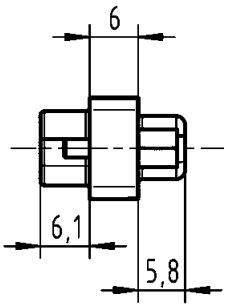

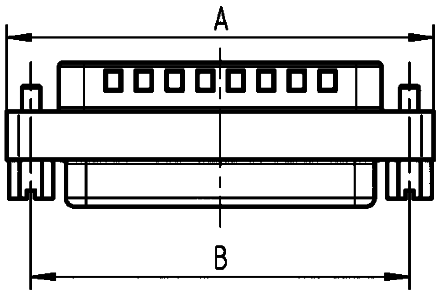

	A	B	C	D
9	30.8	25.0	16.92	16.35
15	39.2	33.3	25.25	24.7
25	53.05	47.04	38.96	38.4
37	69.4	63.5	55.42	54.8

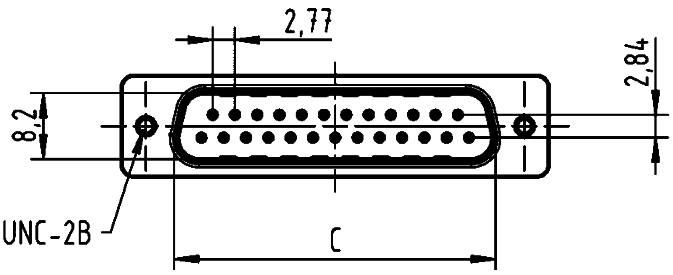

Dimensions in mm

Notes

Number of contacts	15, 26, 44, 62, 78
Working current Stamped contacts	 2 A max.
Test voltage $U_{r.m.s.}$	1 kV
Clearance and creepage	≥ 1.0 mm
Contact resistance	< 20 mΩ < 25 mΩ (for right angled versions)
Insulation resistance	≥ 5 x 10^9 Ω
Temperature range	-40 °C … + 85 °C The higher temperature limit includes the local ambient and heating effect of the contacts under load
Terminations	a) Solder pins Ø 0.65 mm for P.C.B. holes Ø 1.0 mm b) Crimp contacts AWG 26 - 24 0.14 - 0.22 mm² max. insulation Ø 1.38 mm c) Solder cups AWG 24
Materials Mouldings and hoods	 Thermoplastic resin, glass-fibre filled (PBTP), UL 94-V0
Contacts	Copper alloy
Contact surface Contact zone	 selectively plated according to performance level[1)]
Metal shell	Nickel plated steel
Mating force	15 way ≤ 46 N 26 way ≤ 77 N 44 way ≤ 127 N 62 way ≤ 177 N 78 way ≤ 222 N

Number of contacts in the D-Sub standard/D-Sub high density range related to the shell size.

Shell size	D-Sub standard	D-Sub high density
1	9	15
2	15	26
3	25	44
4	37	62
5	50	78

[1)] Performance level 3, 50 mating cycles, no gas test S4, plating = 0.76 µm (30 µinch) Au or PdNi equivalent

Number of contacts

15–78

High density crimp terminal

Identification	No. of contacts	Part number
Male connector	15	09 56 100 5601
Order contacts separately	26	09 56 200 5601
	44	09 56 300 5601
metal shell with dimples	62	09 56 400 5601
	78	09 56 500 5601
Female connector	15	09 56 100 4701
Order contacts separately	26	09 56 200 4701
	44	09 56 300 4701
metal shell	62	09 56 400 4701
	78	09 56 500 4701

Male connector

15-62 78

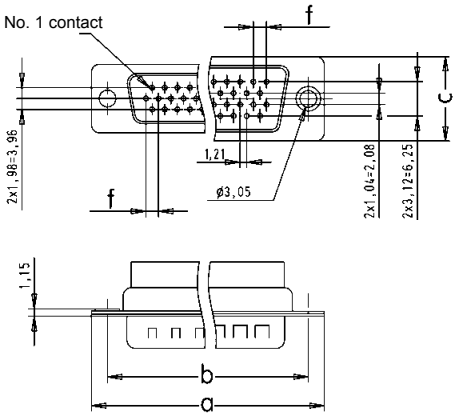

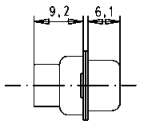

	a	b	c	f
15	30.9	25.0	12.5	2.29
26	39.2	33.3	12.5	2.29
44	53.1	47.0	12.5	2.29
62	69.4	63.5	12.5	2.41
78	67.0	61.1	15.4	2.41

Female connector

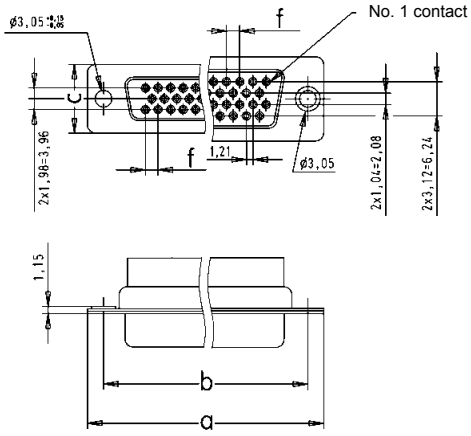

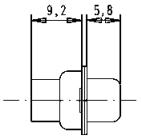

Panel cut out
for front/rear mount

Values are taken from the CECC 75301-802

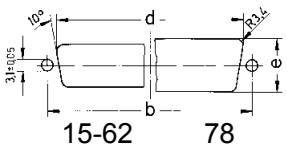

Front mount

	$b_{\pm 0.13}$	$d_{\pm 0.2}$	$e_{\pm 0.2}$
15	25.0	22.2	12.3
26	33.3	30.5	12.3
44	47.0	44.3	12.3
62	63.5	60.7	12.3
78	61.1	58.3	15.1

Rear mount

	$b_{\pm 0.13}$	$d_{\pm 0.2}$	$e_{\pm 0.2}$
15	25.0	20.5	11.4
26	33.3	28.8	11.4
44	47.0	42.5	11.4
62	63.5	59.1	11.4
78	61.1	56.3	14.1

Dimensions in mm

Tooling see chapter 20

Crimp contacts see page 05.40

Crimp contacts for high density connectors

Identification	Wire gauge (mm^2)	Part number			
Performance levels Explanations see page 05.04 Other performance levels on request		stamped male contacts		stamped female contacts	
		Performance level 3	S4[1]	Performance level 3	S4[1]
500 pieces/box	AWG 26-24 0.14-0.22 stranded	09 56 000 8177	09 56 000 8175	09 56 000 8277	09 56 000 8275
500 pieces/reel Unrolling left		09 56 000 8167	09 56 000 8165	09 56 000 8267	09 56 000 8265
10 000 pieces/reel Unrolling left		09 56 000 8157	09 56 000 8155	09 56 000 8257	09 56 000 8255

Unrolling direction

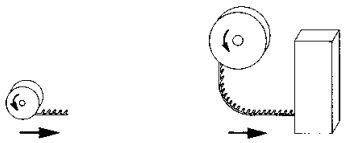

500 pieces/reel Unrolling left

10 000 pieces/reel Unrolling left

for HARTING tools

[1] S4 = 0.76 µm (30 µinch) Au or PdNi equivalent
Contact dimensions see page 05.41

Crimp contacts for high density connectors

Identification	Drawing	Dimensions in mm
Male contacts wire gauge AWG 26-24	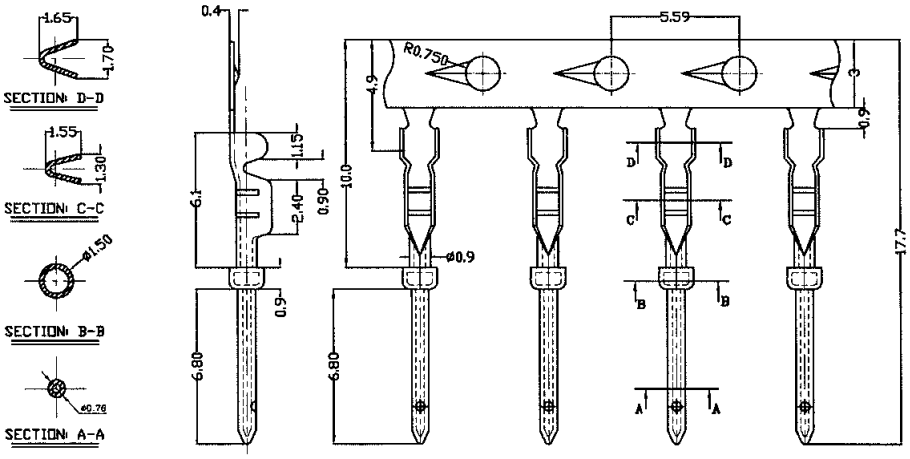	
Female contacts wire gauge AWG 26-24	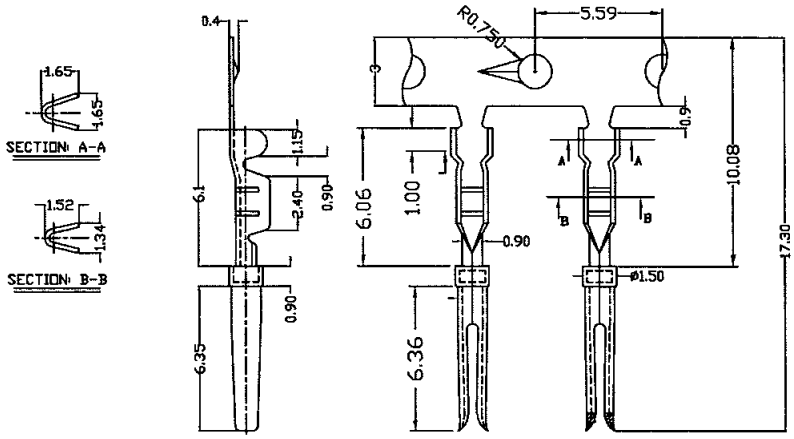	

Number of contacts

15–78

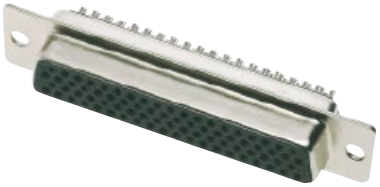

High density with stamped solder cups, straight

Identification	No. of contacts	Part number	
Performance levels Explanations see page 05.04 Other performance levels on request		Performance level 3	S4[1]
Male connector metal shell with dimples			
	15	09 56 100 5604	09 56 100 5615 050
	26	09 56 200 5604	09 56 200 5615 050
	44	09 56 300 5604	09 56 300 5615 050
	62	09 56 400 5604	09 56 400 5615 050
	78	09 56 500 5604	09 56 500 5615 050
Female connector metal shell			
	15	09 56 100 4704	09 56 100 4715 050
	26	09 56 200 4704	09 56 200 4715 050
	44	09 56 300 4704	09 56 300 4715 050
	62	09 56 400 4704	09 56 400 4715 050
	78	09 56 500 4704	09 56 500 4715 050

[1] S4 = 0.76 µm (30 µinch) Au or PdNi equivalent

Number of contacts

15–78

High density with stamped solder cups, straight

Identification	Drawing	Dimensions in mm

Male connector

15-62 78

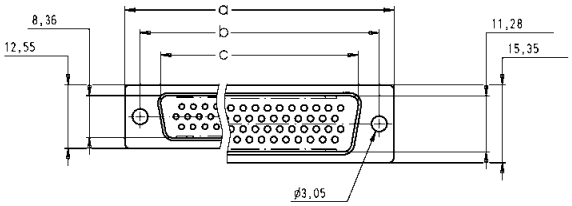

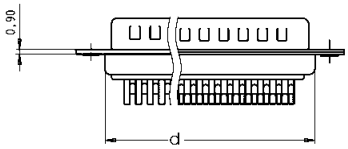

15-62

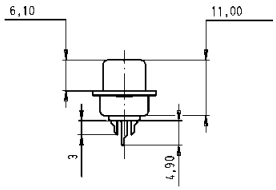

78

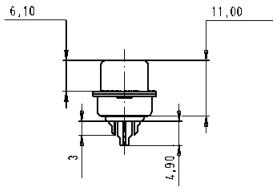

	a	b	c	d	e
15	30.81	25.00	16.92	19.20	16.33
26	39.20	33.30	25.25	27.70	24.70
44	53.05	47.00	38.96	41.10	38.40
62	69.40	63.50	55.42	57.30	54.80
78	67.00	61.00	52.81	55.10	52.20

Female connector

15-62 78

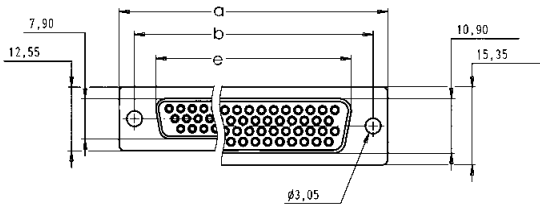

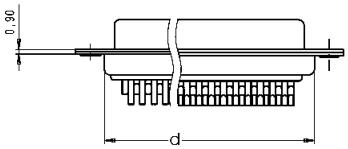

15-62

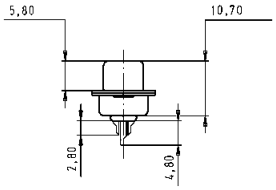

78

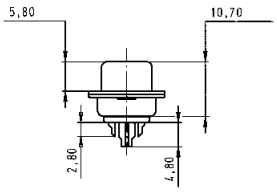

Number of contacts

15–78

High density with stamped solder pins, angled with grounding board locks

Identification	No. of contacts	Part number	
Performance levels Explanations see page 05.04 Other performance levels on request ▶		Performance level 3	S4[1]
Male connector metal shell with dimples	15	09 56 162 781 .	09 56 162 581 .
	26	09 56 262 781 .	09 56 262 581 .
	44	09 56 362 781 .	09 56 362 581 .
	62	09 56 462 781 .	09 56 462 581 .
	78	09 56 562 781 .	09 56 562 581 .
Female connector metal shell	15	09 56 152 761 .	09 56 152 561 .
	26	09 56 252 761 .	09 56 252 561 .
	44	09 56 352 761 .	09 56 352 561 .
	62	09 56 452 761 .	09 56 452 561 .
	78	09 56 552 761 .	09 56 552 561 .
Please insert digit for flange thread or fitted female screw locks 4-40 UNC ▶ 2 fitted screw locks 4-40 UNC ▶ 3			

[1] S4 = 0.76 µm (30 µinch) Au or PdNi equivalent

Number of contacts

15–78

High density with stamped solder pins, angled with grounding board locks

Identification	Drawing	Dimensions in mm

Male connector

15-62 78

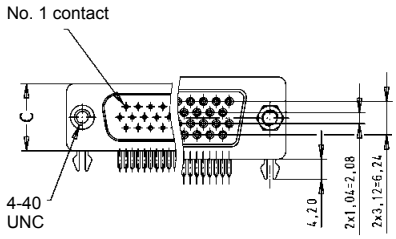

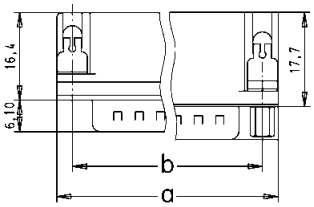

15-62

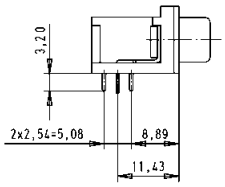

4-40 UNC

78

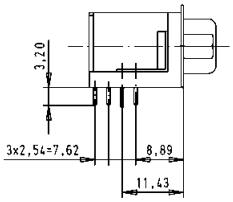

fitted screw locks
4-40 UNC

	a	$b_{\pm 0.1}$	c
15	30.81	24.99	12.55
26	39.20	33.30	12.55
44	53.05	47.04	12.55
62	69.40	63.50	12.55
78	67.00	61.00	15.37

Female connector

15-62 78

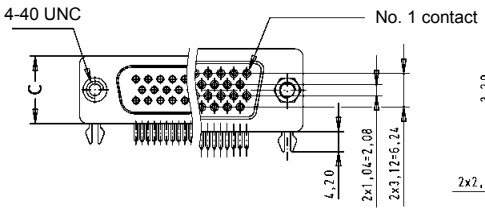

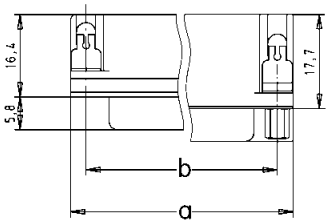

15-62

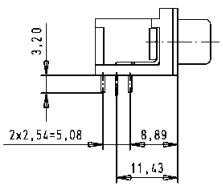

4-40 UNC

78

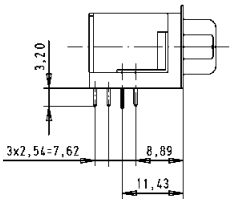

fitted screw locks
4-40 UNC

Number of contacts

15–78

High density with stamped solder pins, angled with grounding board locks

Identification	Drawing	Dimensions in mm

Board drillings

male 15

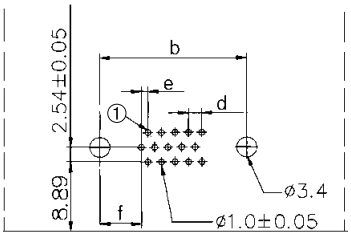

female 15

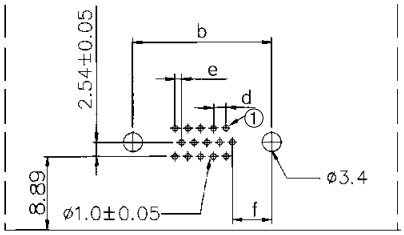

male 26-62

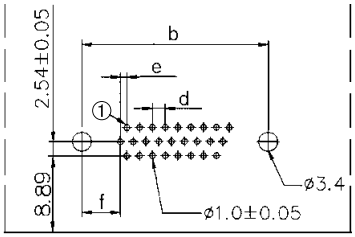

female 26-62

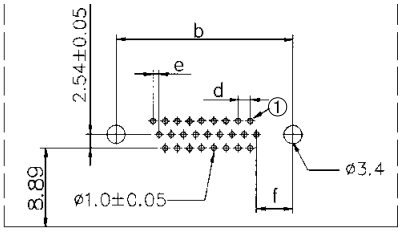

male 78

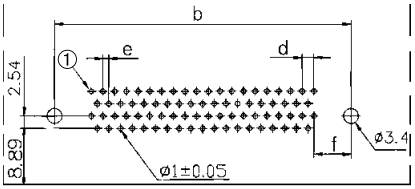

female 78

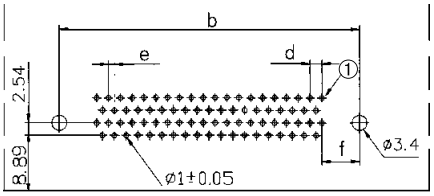

① = No. 1 contact

	$b_{\pm 0.1}$	d	e	f
15	24.99	2.29	1.145	7.04
26	33.30	2.29	1.145	6.88
44	47.04	2.29	1.145	6.88
62	63.50	2.41	1.205	7.00
78	61.00	2.41	1.205	7.65

Number of contacts

15–78

High density with stamped solder pins, straight

Identification	No. of contacts	Part number	
Performance levels Explanations see page 05.04 Other performance levels on request		Performance level 3	S4[1]
Male connector metal shell with dimples	15	09 56 161 7700	09 56 161 5700
	26	09 56 261 7700	09 56 261 5700
	44	09 56 361 7700	09 56 361 5700
	62	09 56 461 7700	09 56 461 5700
	78	09 56 561 7700	09 56 561 5700
Female connector metal shell	15	09 56 151 7500	09 56 151 5500
	26	09 56 251 7500	09 56 251 5500
	44	09 56 351 7500	09 56 351 5500
	62	09 56 451 7500	09 56 451 5500
	78	09 56 551 7500	09 56 551 5500

15-62 78 15-62 78

Male connector

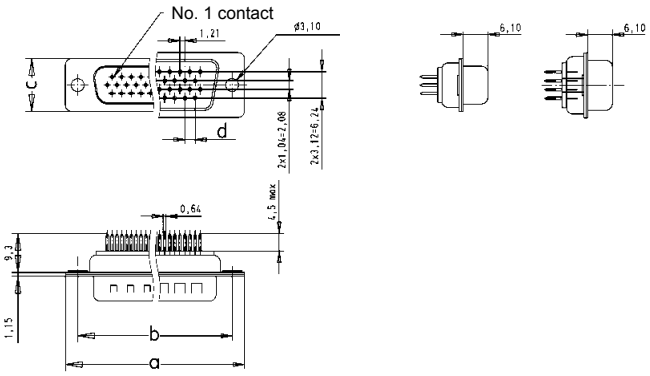

Female connector

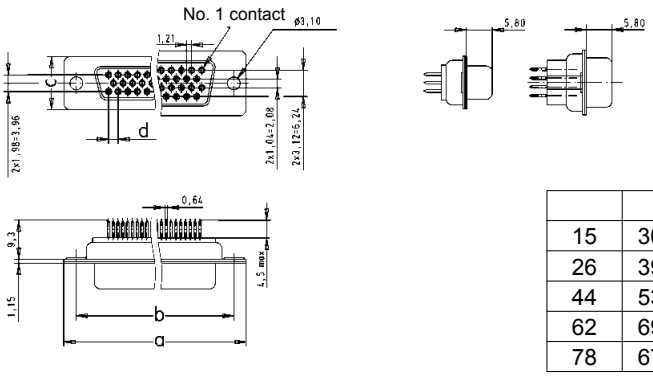

	a	b ±0.1	c	d
15	30.9	25.0	12.5	2.29
26	39.2	33.3	12.5	2.29
44	53.1	47.0	12.5	2.29
62	69.4	63.5	12.5	2.41
78	67.0	61.1	15.4	2.41

Board drillings

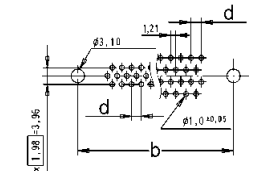

Dimensions in mm

[1] S4 = 0.76 µm (30 µinch) Au or PdNi equivalent

Number of contacts

15–78

High density with stamped solder pins, straight with grounding board locks

Identification	No. of contacts	Part number	
Performance levels ▶ Explanations see page 05.04 Other performance levels on request		Performance level 3	S4[1]
Male connector metal shell with dimples			
	15	09 56 161 771 .	09 56 161 571 .
	26	09 56 261 771 .	09 56 261 571 .
	44	09 56 361 771 .	09 56 361 571 .
	62	09 56 461 771 .	09 56 461 571 .
	78	09 56 561 771 .	09 56 561 571 .
Female connector metal shell			
	15	09 56 151 751 .	09 56 151 551 .
	26	09 56 251 751 .	09 56 251 551 .
	44	09 56 351 751 .	09 56 351 551 .
	62	09 56 451 751 .	09 56 451 551 .
	78	09 56 551 751 .	09 56 551 551 .
Please insert digit for flange thread or fitted female screw locks			
4-40 UNC ▶ 2			
fitted screw locks 4-40 UNC ▶ 3			

[1] S4 = 0.76 µm (30 µinch) Au or PdNi equivalent

Number of contacts

15–78

High density with stamped solder pins, straight with grounding board locks

Identification	Drawing	Dimensions in mm

Male connector

15-62 78

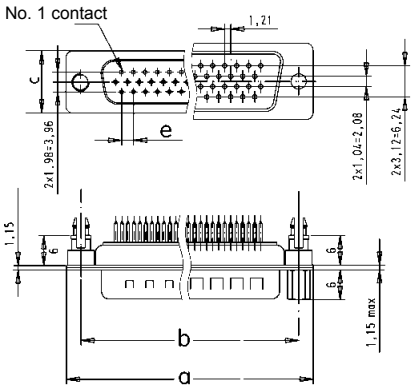

15-62 78

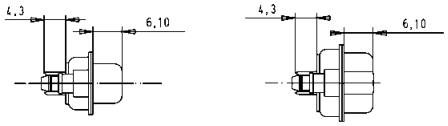

4-40 UNC

fitted screw locks
4-40 UNC

	a	$b_{\pm 0.1}$	c	e
15	30.9	25.0	12.5	2.29
26	39.2	33.3	12.5	2.29
44	53.1	47.0	12.5	2.29
62	69.4	63.5	12.5	2.41
78	67.0	61.1	15.4	2.41

Female connector

15-62 78

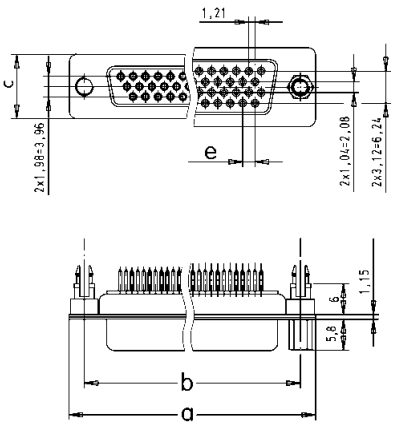

15-62 78

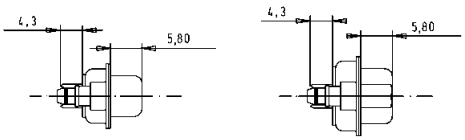

4-40 UNC

fitted screw locks
4-40 UNC

Board drillings

male 15-62

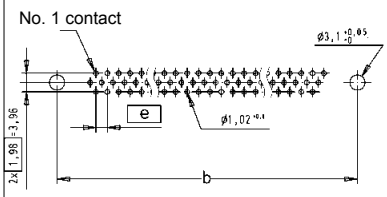

female 15-62

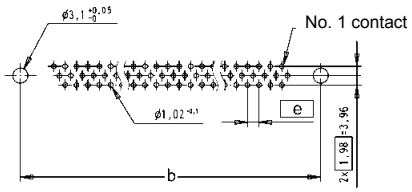

male 78

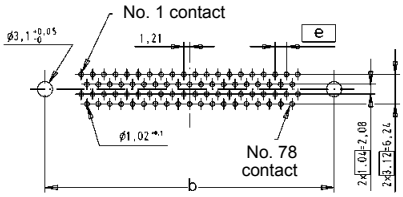

female 78

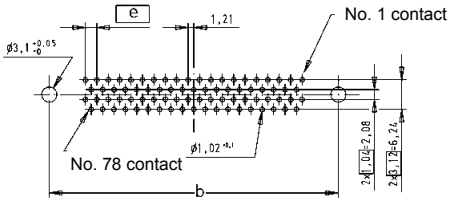

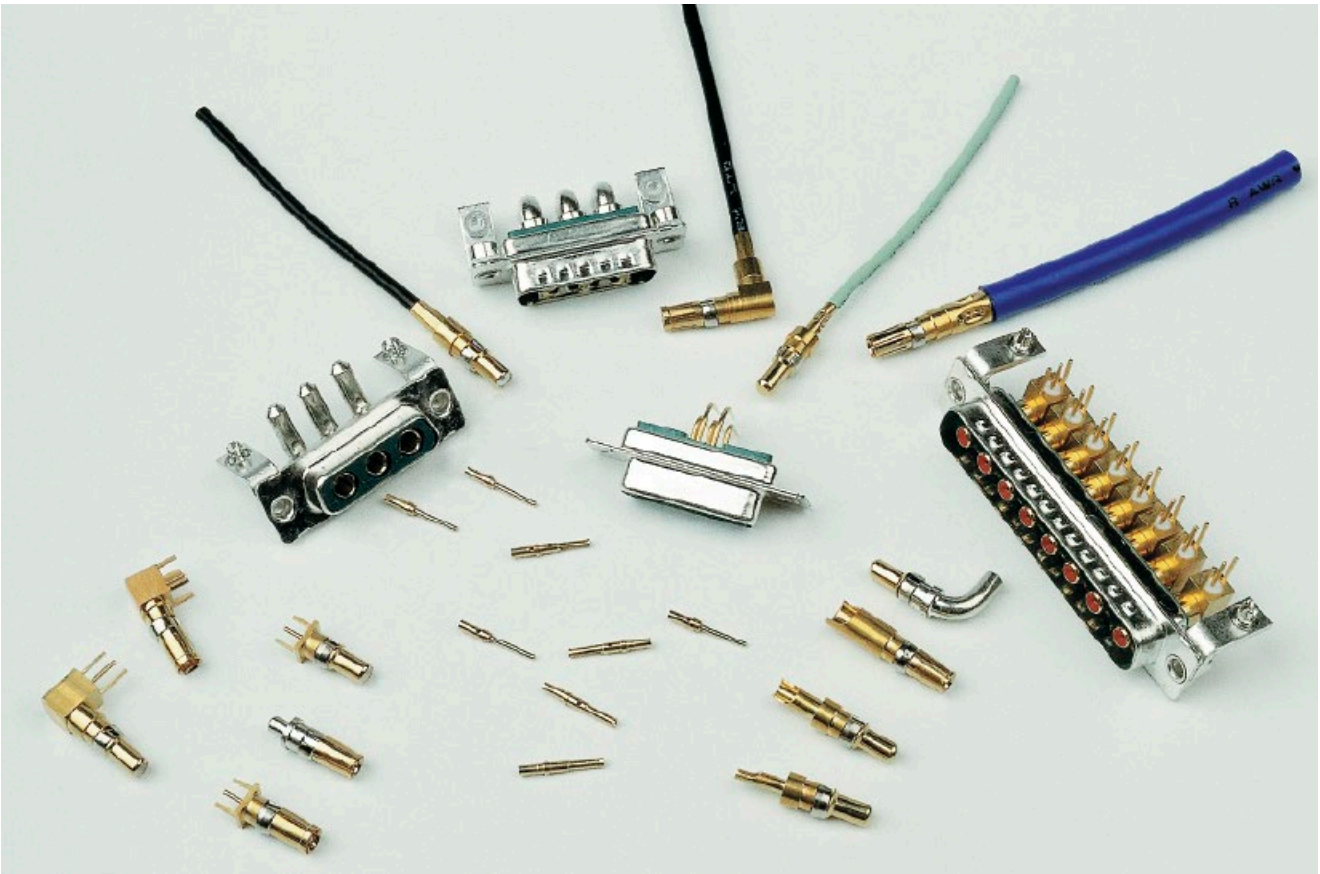

HARTINGs' mixed D-Sub range brings the advantage of an industry standard I/O interconnect product with the possibility to customise for any application.

The range is designed around ***the standard D-Sub shell sizes*** with ***the possibility to have a blend of contacts*** such as signals with coaxial, power, high voltage or pneumatic contacts. Due to its construction, the product is ***fully shielded*** and helps reducing the EMI/RFI leakage.

All contacts are machined with two different platings.

When hot plug-in is required, ***first mate last break*** contacts can also be supplied.

For connectors to be fitted on a board with SMT components, they can be supplied in an ***SMC (PiHIR) version*** which is assembled in the reflow solder process, thus reducing assembly cost.

In addition, a complete range of accessories such as clinch nut, spacers, board locks, female screw lock, etc. are available. For ***blind mating feature***, a specific high performance solution has been developed based on the combination of a floating plate and guiding pins providing up to 2.2 mm realignment capability. With all these accessories, the requirements of most applications are achievable and it makes this product range very attractive thanks to its versatility, reliability and cost effectiveness.

This blind mating concept is also achievable on the standard D as shown on the photo.

Contact arrangements

The table shows the standard range supported by HARTING. Two versions are special since they allow to mix in the same shell male and female contacts: 2W2C and 3W3C. The purpose of these versions is to have a 100 % mating proof feature (the insulator shape prevents a 180° reversed mating).

The structure of the connectors' identification is so that the left side digits give the total number of contacts and the right side digits the number of special contacts which can be either power, coaxial or high voltage style.
Example: 13W3 stands for 13 contacts in total with 10 signal contacts and 3 special contacts.

	Shell size	
2W2	1	
2W2C	1	
5W1	1	
3W3	2	
3W3C	2	
7W2	2	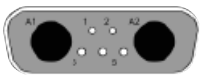
11W1	2	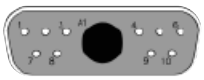
5W5	3	
9W4	3	
13W3	3	
17W2	3	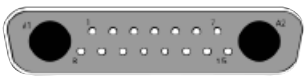
21W1	3	

	Shell size	
7W7	4	
8W8	4	
13W6	4	
21WA4	4	
25W3	4	
27W2	4	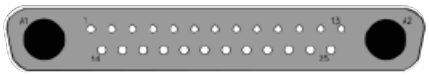
24W7	5	
36W4	5	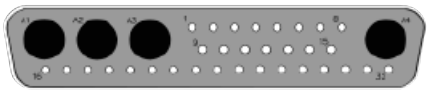
43W2	5	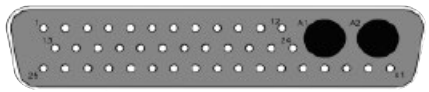

Note:
for any other layout please consult your HARTING representative.

Connectors for pcb applications – general information

The range of pcb connectors available at HARTING is summarised in the table under. For each of the basic connector versions, the available contact styles are documented with termination process, pitch, plating, rating for power contacts and impedance for coaxial contact etc..., as well as the accessory configuration.

Pcb connectors are delivered fully loaded thus providing a very good positioning of the contacts in their cavities for an easy and safe insertion of the pins in the pcb holes particularly crucial in the right angled versions.

Due to the numerous possibilities offered with the pcb connectors, suggested method is to contact your local HARTING representative to determine the part number to order; see customer request form on pages 05.88 and 05.89.

	Straight		Right angled	
Insulator body	• Standard • SMC: Solder Reflow Compatible		• Standard • SMC: Solder Reflow Compatible	
Signal contacts	**Solder termination** • Pitch: 2.84 mm • Plating: 0.76 µm Au over Ni • Pcb thickness from 1.6 to 3.2 mm		**Solder termination** • Pitch: 2.54 mm • Plating: 0.76 µm Au over Ni • Pcb thickness from 1.6 to 3.2 mm	
Power contacts	**Solder termination** • Rating: 20, 30, 40 A • Plating: 0.76 µm Au over Ni **Press-in termination** • Rating: 30 A • Plating: 0.76 µm Au over Ni		**Solder termination** • Rating: 20, 30, 40 A • Plating: 0.76 µm Au over Ni	
Coaxial contacts	**Solder termination** • 50 or 75 Ω • Plating: 1.3 µm Au over Ni inner conductor 0.76 µm Au over Ni outer ring		**Solder termination** • 50 or 75 Ω • Plating: 1.3 µm Au over Ni inner conductor 0.76 µm Au over Ni outer ring	
Accessories	Through hole	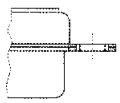	Metal bracket with board lock and through hole	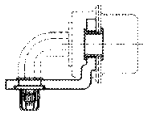
	Nut: M3 or UNC 4-40	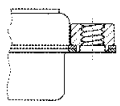	Metal bracket with board lock and clinch nut M3 or UNC 4-40	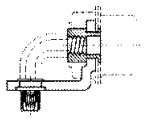
	Spacer: M3 or UNC 4-40	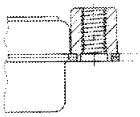	Metal bracket with board lock and female screw lock UNC 4-40	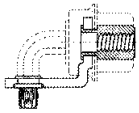
	Spacer (M3 or UNC 4-40) with board lock	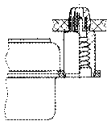		
	Spacer + board lock + female screw lock M3 or UNC 4-40	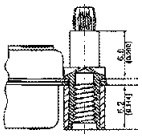		

Connectors for cable applications – general information

Two termination processes are available: crimp or solder

Shell		
Signal contacts	**Crimp termination** • For wire gauge: AWG 20-24 or 26-28 • Plating: 0.76 µm or 0.2 µm Au over Ni	**Pre-mounted solder cup contacts** • Plating: 0.76 µm or 0.1 µm Au over Ni
Power contacts	**Crimp** • Rating: 10, 20, 30, 40 A • Plating: Mating side 0.76 µm or 0.2 µm Au Terminating side 0.2 µm Au **Solder cup** • Rating: 10, 20, 30, 40 A • Plating: Mating side 0.76 µm or 0.2 µm Au Terminating side 0.2 µm Au or 5 µm Sn	**Crimp** • Rating: 10, 20, 30, 40 A • Plating: Mating side 0.76 µm or 0.2 µm Au Terminating side 0.2 µm Au **Solder cup** • Rating: 10, 20, 30, 40 A • Plating: Mating side 0.76 µm or 0.2 µm Au Terminating side 0.2 µm Au or 5 µm Sn
Coaxial contacts[1]	**Solder/crimp termination resp. Crimp/crimp termination** • 50 or 75 Ω • Plating: Mating side 1.3 µm or 0.2 µm Au inner conductor 0.76 µm or 0.2 µm Au outer ring Terminating side 1.3 µm or 0.2 µm Au inner conductor 0.2 µm Au or 5 µm Sn outer ring Ferrule 0.2 µm Au or 5 µm Sn • Cables: RG 178, 179 …	**Solder/crimp termination resp. Crimp/crimp termination** • 50 or 75 Ω • Plating: Mating side 1.3 µm or 0.2 µm Au inner conductor 0.76 µm or 0.2 µm Au outer ring Terminating side 1.3 µm or 0.2 µm Au inner conductor 0.2 µm Au or 5 µm Sn outer ring Ferrule 0.2 µm Au or 5 µm Sn • Cables: RG 178, 179 …
High voltage contacts	**Solder termination** • Plating: 1.3 µm Au over Ni terminating and mating side	**Solder termination** • Plating: 1.3 µm Au over Ni terminating and mating side

[1] Coaxial contacts are provided in two versions:
- Inner conductor soldered and outer part crimped (solder/crimp termination)
- Both inner and outer part crimped (crimp/crimp termination); this version is recommended for medium or large size volume since crimping is faster than soldering.

Number of contacts	2, 3, 5, 7, 8, 9, 11, 13, 17, 21, 24, 25, 27, 36, 43
Approvals	DIN 41652, part 1
Working current	5 A for signal contacts
Temperature range The higher temperature limit includes the ambient and heating effect of the contacts under load	-55 °C … +125 °C
Materials	
Mouldings	Thermoplastic resin, glass-fibre filled (Polyester) UL 94-V0 color: green for standard black for crimp
Metal shell	Tin plated steel

Technical characteristics for special contacts see page 05.69

Number of contacts

7–27

Mixed shells with pre-mounted signal solder cup contacts

Identification	No. of contacts[1]	Part number			
		male connectors		female connectors	
		Performance level 3	S4[2]	Performance level 3	S4[2]
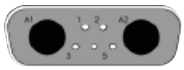	7W2	09 69 211 7072	09 69 211 5072	09 69 201 7072	09 69 201 5072
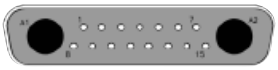	17W2	09 69 311 7172	09 69 311 5172	09 69 301 7172	09 69 301 5172
	21WA4	09 69 411 7214	09 69 411 5214	09 69 401 7214	09 69 401 5214
	27W2	09 69 411 7272	09 69 411 5272	09 69 401 7272	09 69 401 5272

Male connectors

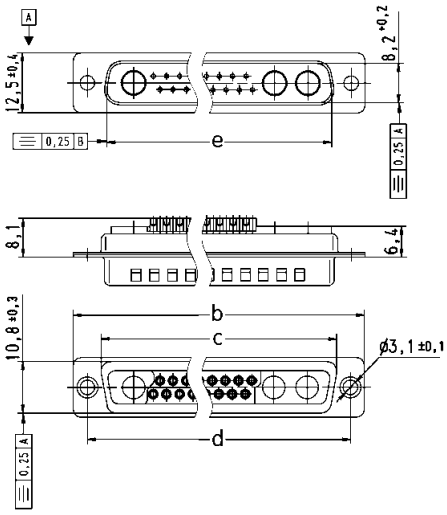

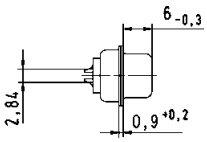

Solder cup termination for AWG 20 (0.5 mm²)

	a	b	c	d	e
7W2	24.6	39.1	27.5	33.30	25.2
17W2	38.3	53.0	41.3	47.04	38.9
21WA4	54.8	69.3	57.7	63.50	55.3
27W2	54.9	69.3	57.7	63.50	55.3

Female connectors

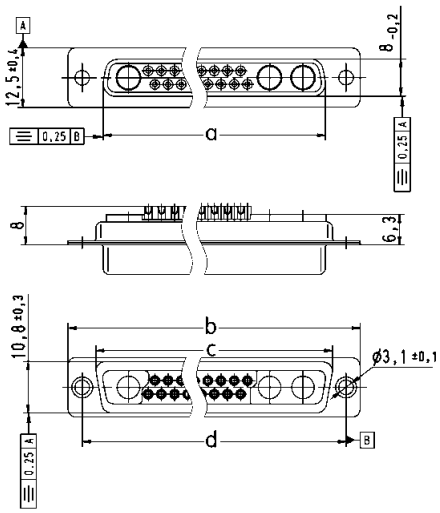

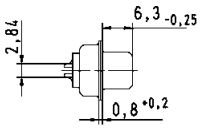

Solder cup termination for AWG 20 (0.5 mm²)

Dimensions in mm

[1] Explanations see page 05.51
[2] S4 = 0.76 µm Au or PdNi equivalent

Board drillings see pages 05.78 ff
Order special contacts separately. See pages 05.69 ff

Number of contacts

9–25

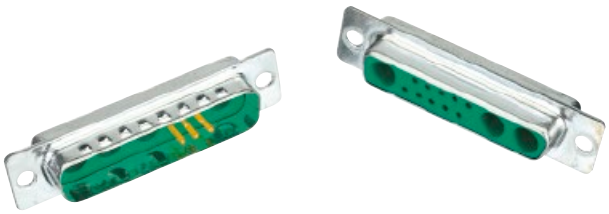

Mixed shells with pre-mounted signal solder cup contacts

Identification	No. of contacts[1]	Part number			
		male connectors		female connectors	
		Performance level 3	S4[2]	Performance level 3	S4[2]
	9W4	09 69 311 7094	09 69 311 5094	09 69 301 7094	09 69 301 5094
	13W3	09 69 311 7133	09 69 311 5133	09 69 301 7133	09 69 301 5133
	25W3	09 69 411 7253	09 69 411 5253	09 69 401 7253	09 69 401 5253

Male connectors

9W4

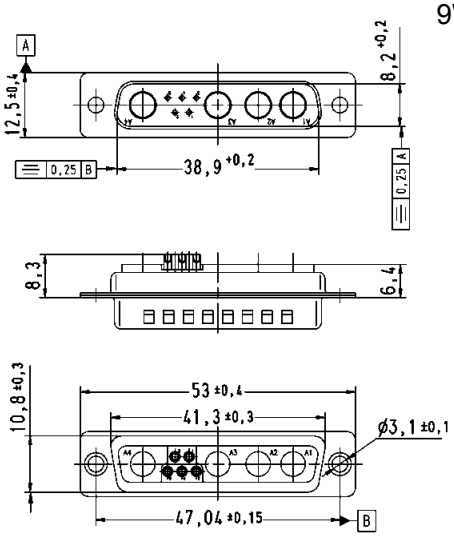

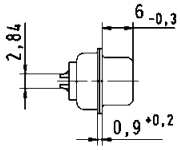

Solder cup termination for AWG 20 (0.5 mm²)

13W3, 25W3

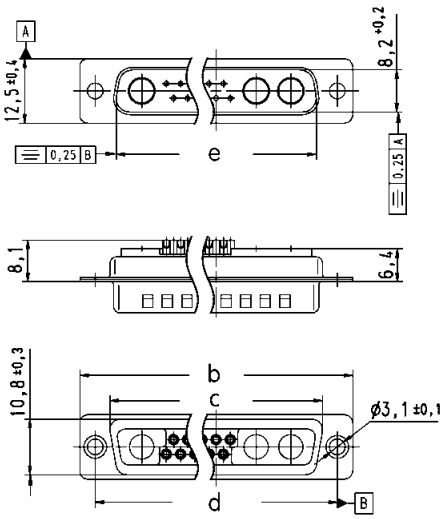

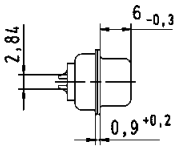

Solder cup termination for AWG 20 (0.5 mm²)

	b	c	d	e
13W3	53.0	41.3	47.04	38.90
25W3	69.3	57.7	63.50	49.84

Dimensions in mm

[1] Explanations see page 05.51
[2] S4 = 0.76 µm Au or PdNi equivalent
Board drillings see pages 05.78 ff

Drawings for female connectors see page 05.57
Order special contacts separately. See pages 05.69 ff

Number of contacts

9–25

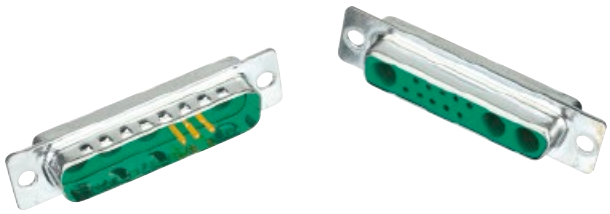

Mixed shells with pre-mounted signal solder cup contacts

Identification	Drawing	Dimensions in mm

Female connectors

9W4

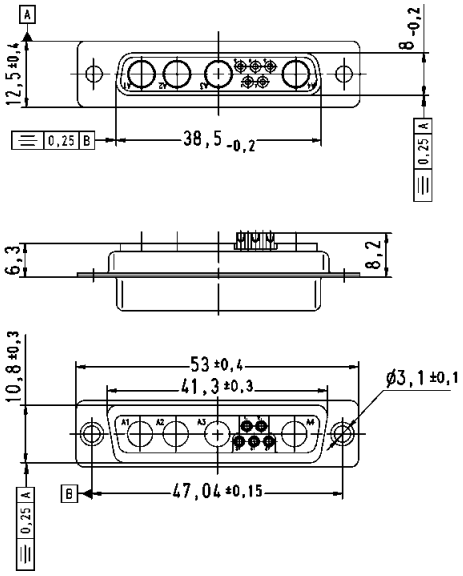

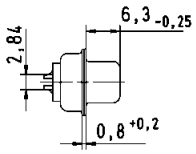

Solder cup termination for AWG 20 (0.5 mm²)

13W3, 25W3

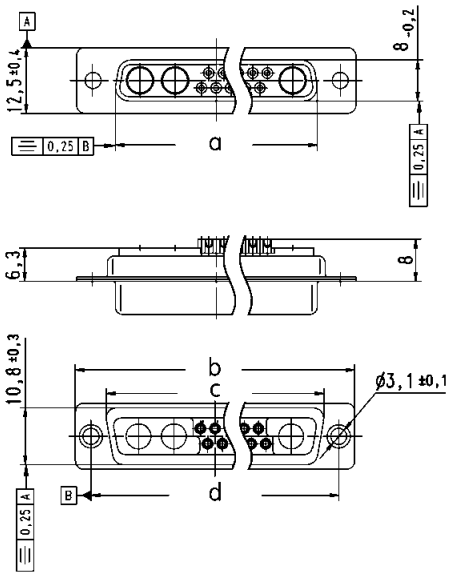

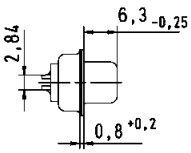

Solder cup termination for AWG 20 (0.5 mm²)

	a	b	c	d
13W3	38.3	53.0	41.3	47.04
25W3	54.9	69.3	57.7	63.50

Board drillings see pages 05.78 ff

Number of contacts

5–21

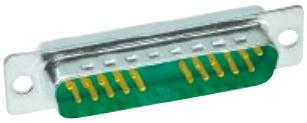

Mixed shells with pre-mounted signal solder cup contacts

Identification	No. of contacts[1]	Part number			
		male connectors		female connectors	
		Performance level 3	S4[2]	Performance level 3	S4[2]
	5W1	09 69 111 7051	09 69 111 5051	09 69 101 7051	09 69 101 5051
	11W1	09 69 211 7111	09 69 211 5111	09 69 201 7111	09 69 201 5111
	21W1	09 69 311 7211	09 69 311 5211	09 69 301 7211	09 69 301 5211

Male connectors

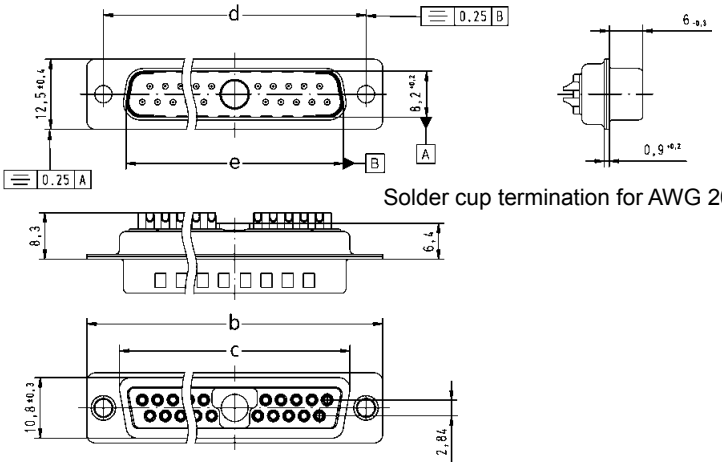

Solder cup termination for AWG 20 (0.5 mm²)

Female connectors

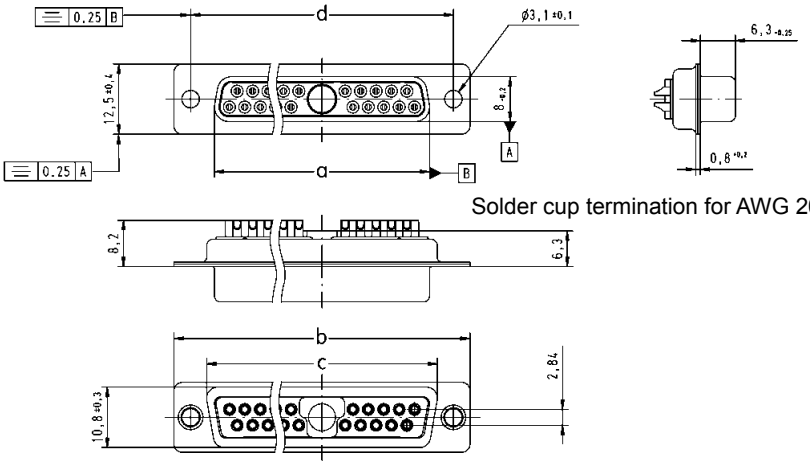

Solder cup termination for AWG 20 (0.5 mm²)

	a	b	c	d	e
5W1	16.4	30.8	19.3	25.00	16.9
11W1	24.7	39.1	27.5	33.30	25.2
21W1	38.5	53.0	41.3	47.04	38.9

Dimensions in mm

[1] Explanations see page 05.51
[2] S4 = 0.76 µm Au or PdNi equivalent
Board drillings see pages 05.78 ff

Order special contacts separately. See pages 05.69 ff

Number of contacts

13

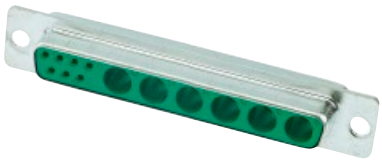

Mixed shells with pre-mounted signal solder cup contacts

Identification	No. of contacts[1]	Part number			
		male connectors		female connectors	
		Performance level 3	S4[2]	Performance level 3	S4[2]
	13W6	09 69 411 7136	09 69 411 5136	09 69 401 7136	09 69 401 5136

Male connectors

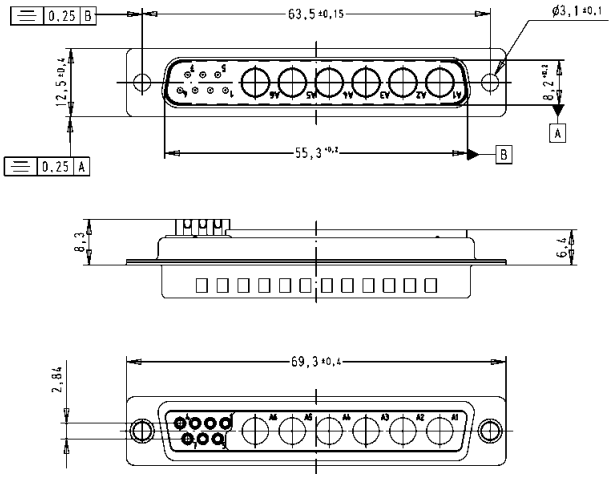

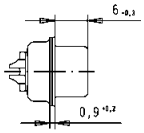

Solder cup termination for AWG 20 (0.5 mm²)

Female connectors

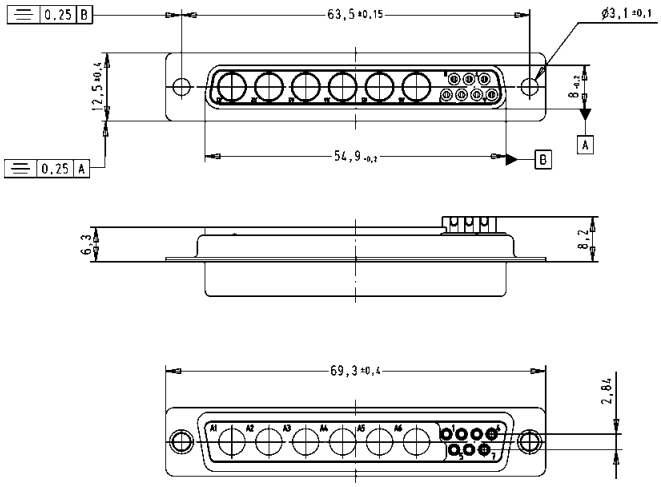

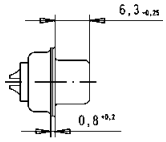

Solder cup termination for AWG 20 (0.5 mm²)

Dimensions in mm

[1] Explanations see page 05.51
[2] S4 = 0.76 µm Au or PdNi equivalent
Board drillings see pages 05.78 ff

Order special contacts separately. See pages 05.69 ff

Number of contacts

24

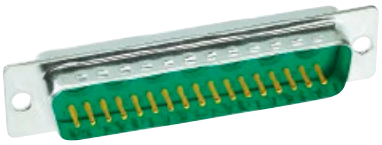

Mixed shells with pre-mounted signal solder cup contacts

Identification	No. of contacts[1]	Part number			
		male connectors		female connectors	
		Performance level 3	S4[2]	Performance level 3	S4[2]
	24W7	09 69 511 7247	09 69 511 5247	09 69 501 7247	09 69 501 5247

Male connectors

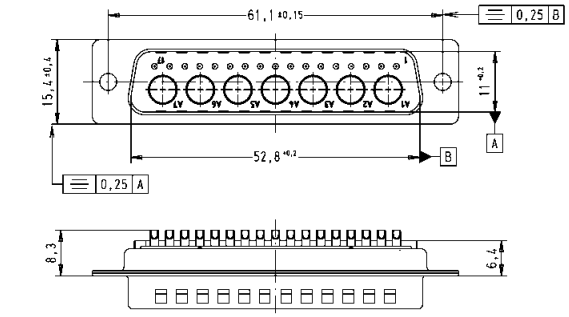

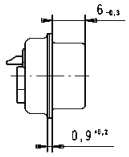

Solder cup termination for AWG 20 (0.5 mm²)

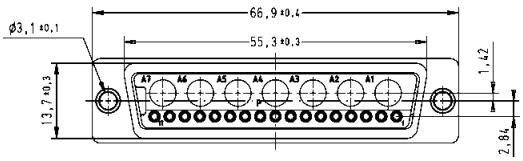

Female connectors

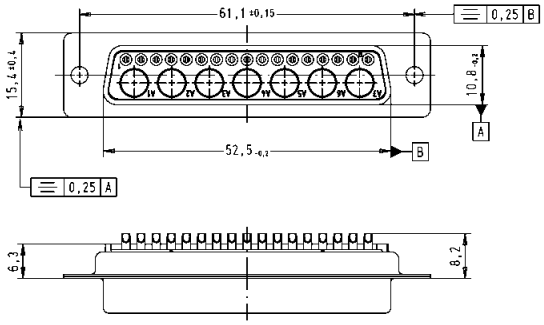

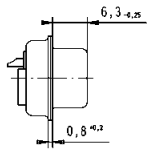

Solder cup termination for AWG 20 (0.5 mm²)

Dimensions in mm

[1] Explanations see page 05.51
[2] S4 = 0.76 µm Au or PdNi equivalent
Board drillings see pages 05.78 ff

Order special contacts separately. See pages 05.69 ff

Number of contacts

36–43

Mixed shells with pre-mounted signal solder cup contacts

Identification	No. of contacts[1]	Part number			
		male connectors		female connectors	
		Performance level 3	S4[2]	Performance level 3	S4[2]
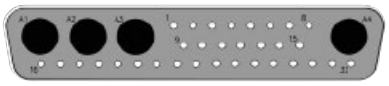	36W4	09 69 511 7364	09 69 511 5364	09 69 501 7364	09 69 501 5364
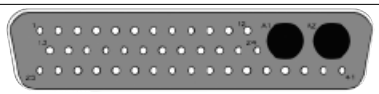	43W2	09 69 511 7432	09 69 511 5432	09 69 501 7432	09 69 501 5432

Male connectors

36W4

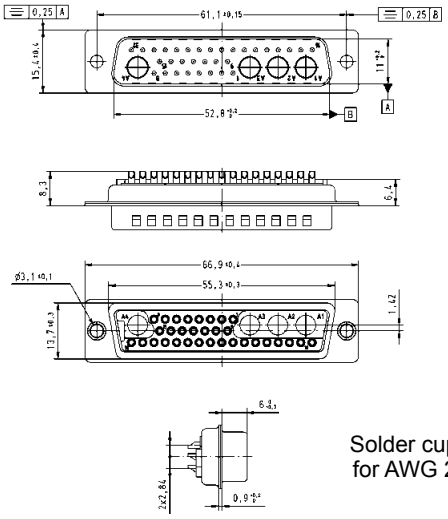

43W2

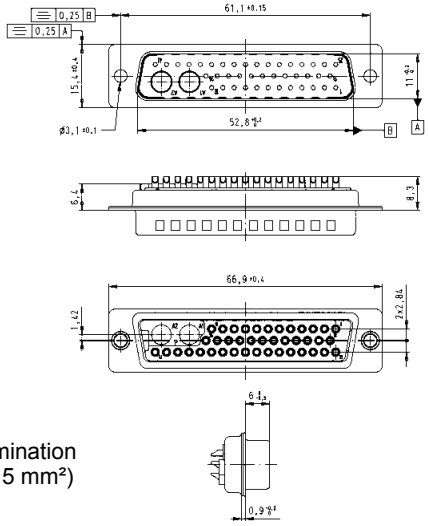

Solder cup termination for AWG 20 (0.5 mm²)

Female connectors

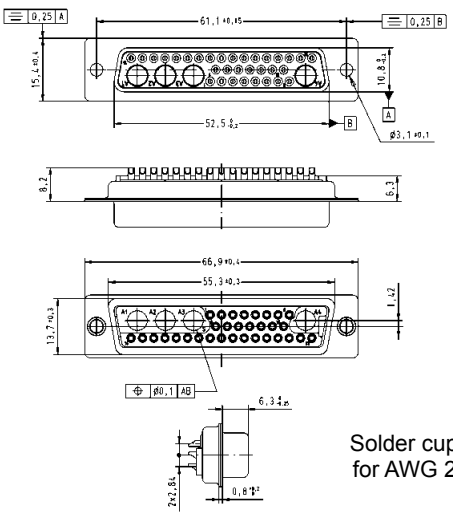

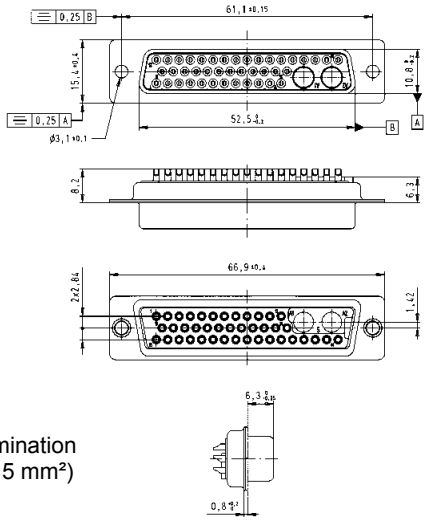

Solder cup termination for AWG 20 (0.5 mm²)

Dimensions in mm

[1] Explanations see page 05.51
[2] S4 = 0.76 µm Au or PdNi equivalent
Board drillings see pages 05.78 ff

Order special contacts separately. See pages 05.69 ff

Number of contacts

2–8

Shells without signal contacts for cable applications

Identification	No. of contacts[1]	Part number	
		male connectors	female connectors
	2W2	09 69 110 0522	09 69 100 0522
	3W3	09 69 210 0033	09 69 200 0033
	5W5	09 69 310 0055	09 69 300 0055
	7W7	09 69 410 0077	09 69 400 0077
	8W8	09 69 410 0088	09 69 400 0088

Male connectors

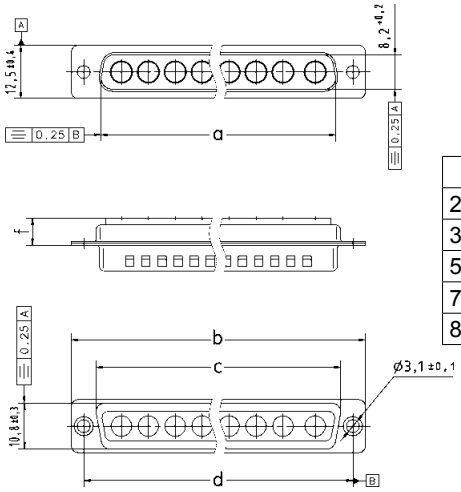

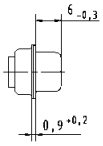

	a	b	c	d	e	f	g
2W2	16.9	30.8	–	25.00	16.4	8.7	8.6
3W3	25.2	39.1	27.5	33.30	24.6	6.4	6.3
5W5	38.9	53.0	41.3	47.04	38.3	6.4	6.3
7W7	55.3	69.3	57.7	63.50	54.9	6.4	6.3
8W8	55.3	69.3	57.7	63.50	54.8	6.4	6.3

Female connectors

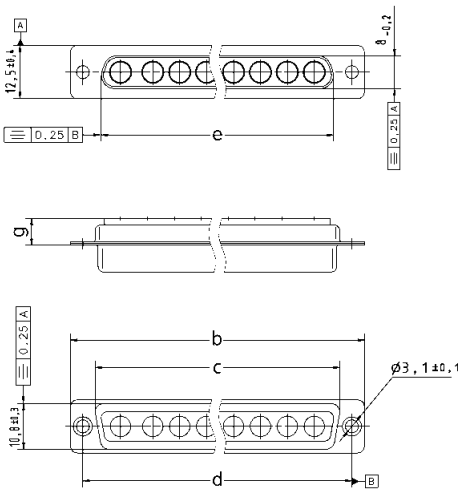

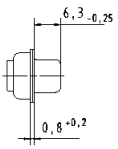

Dimensions in mm

[1] Explanations see page 05.51
Board drillings see pages 05.78 ff
Order special contacts separately. See pages 05.69 ff

Number of contacts

2

Coded shells without signal contacts for cable applications

Identification	No. of contacts[1]	Part number	
		male connector	female connector
	2W2C	09 69 110 0022	09 69 100 0022

Male connectors

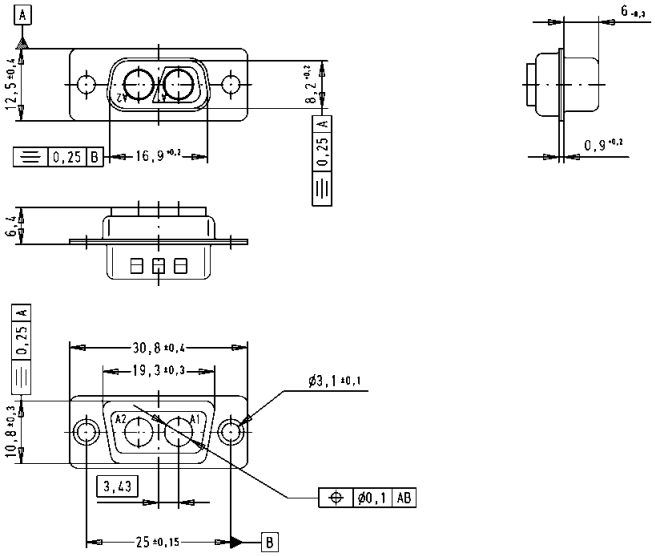

Female connectors

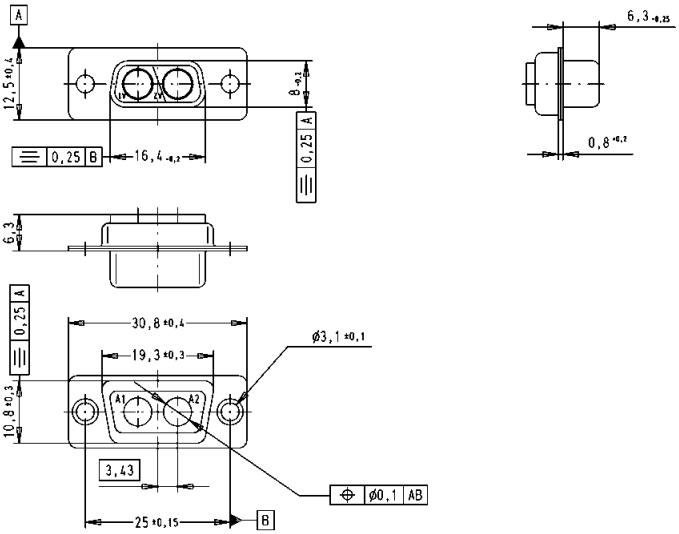

Dimensions in mm

[1] Explanations see page 05.51
Board drillings see pages 05.78 ff
Order special contacts separately. See pages 05.69 ff

Number of contacts

3

Coded shells without signal contacts for cable applications

Identification	No. of contacts[1]	Part number	
		male connector	female connector
	3W3C	09 69 210 0633	09 69 200 0633

Male connectors

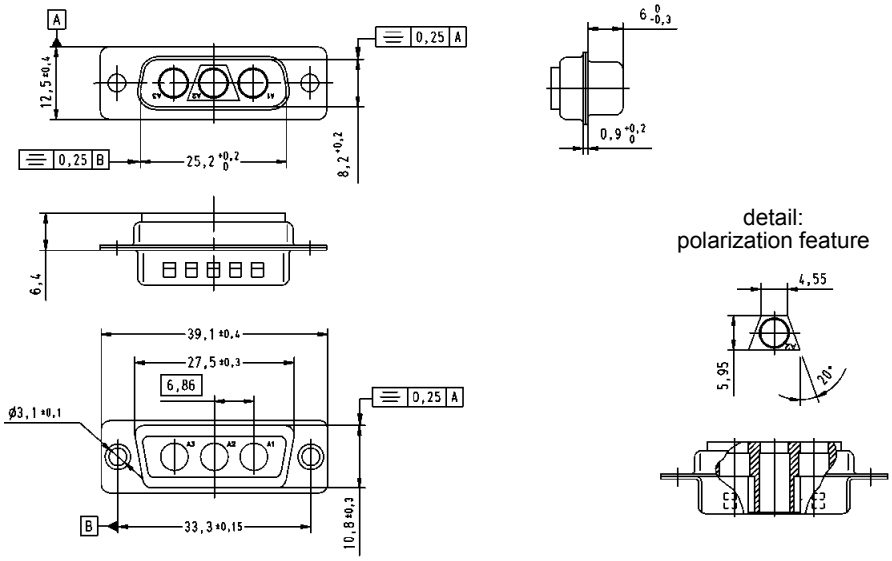

Female connectors

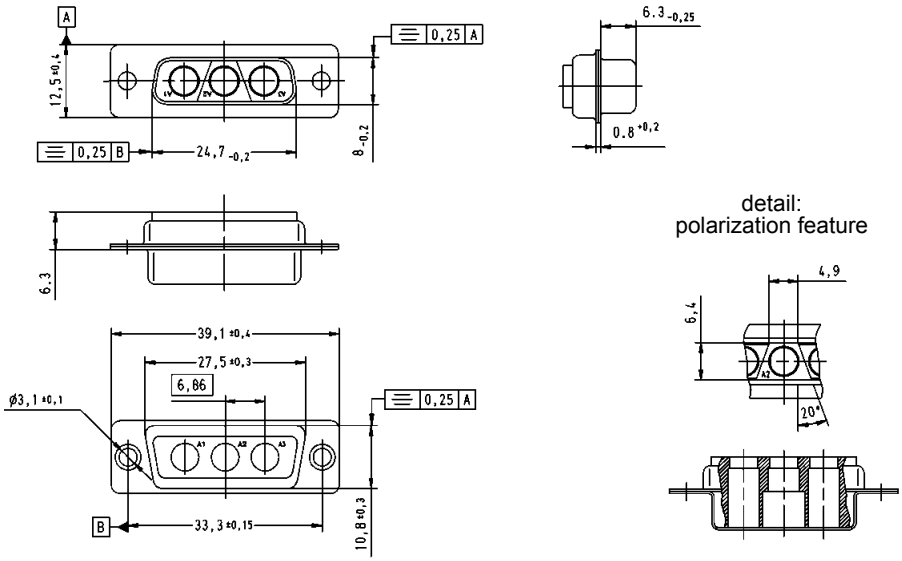

Dimensions in mm

[1] Explanations see page 05.51
Board drillings see pages 05.78 ff
Order special contacts separately. See pages 05.69 ff

Number of contacts

7–27

Mixed shells for signal crimp contacts

Identification	No. of contacts[1]	Part number	
		male connectors	female connectors
	7W2	09 69 212 0072	09 69 202 0072
	17W2	09 69 312 0172	09 69 302 0172
	21WA4	09 69 412 0214	09 69 402 0214
	27W2	09 69 412 0272	09 69 402 0272

Male connectors

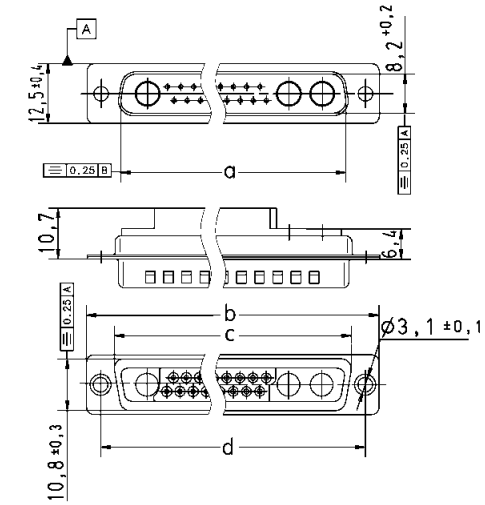

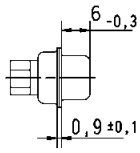

	a	b	c	d	e
7W2	25.2	39.1	27.5	33.30	24.7
17W2	38.9	53.0	41.3	47.04	38.5
21WA4	55.3	69.3	57.7	63.50	54.9
27W2	56.3	69.3	–	63.50	54.9

Female connectors

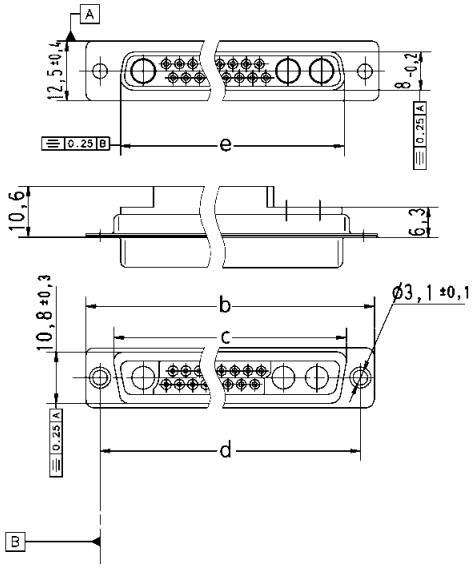

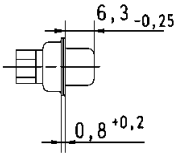

Dimensions in mm

[1] Explanations see page 05.51
Board drillings see pages 05.78 ff
Order special contacts separately. See pages 05.69 ff

Number of contacts

13–25

Mixed shells for signal crimp contacts

Identification	No. of contacts[1]	Part number	
		male connectors	female connectors
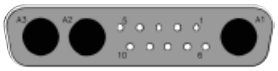	13W3	09 69 312 0133	09 69 302 0133
	25W3	09 69 412 0253	09 69 402 0253

Male connectors

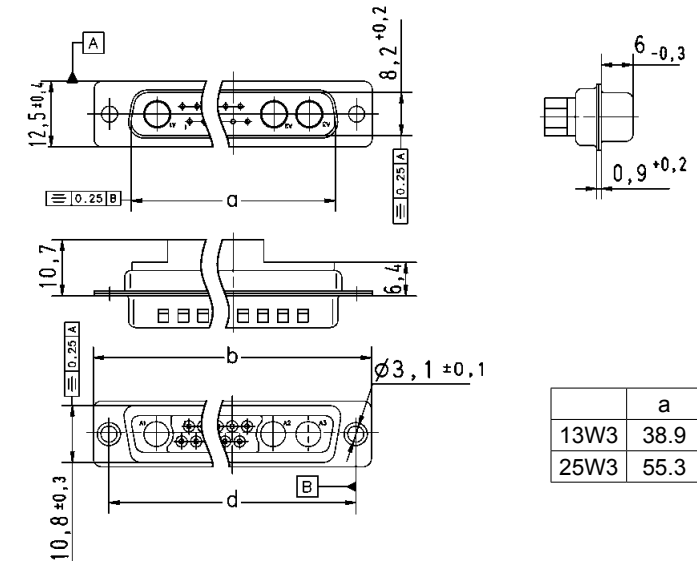

	a	b	d	e
13W3	38.9	53.0	47.04	38.5
25W3	55.3	69.3	63.50	54.9

Female connectors

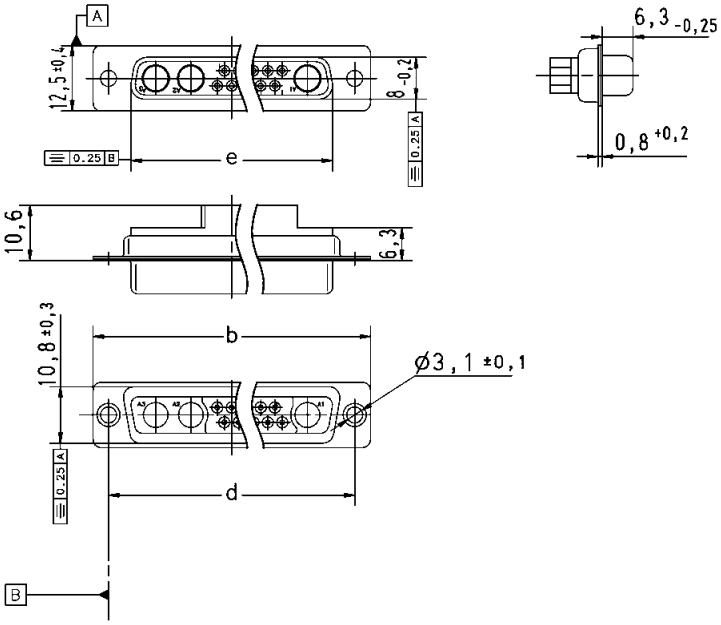

Dimensions in mm

[1] Explanations see page 05.51
Board drillings see pages 05.78 ff
Order special contacts separately. See pages 05.69 ff

Number of contacts

11–21

Mixed shells for signal crimp contacts

Identification	No. of contacts[1]	Part number	
		male connectors	female connectors
	11W1	09 69 212 0111	09 69 202 0111
	21W1	09 69 312 0211	09 69 302 0211

Male connectors

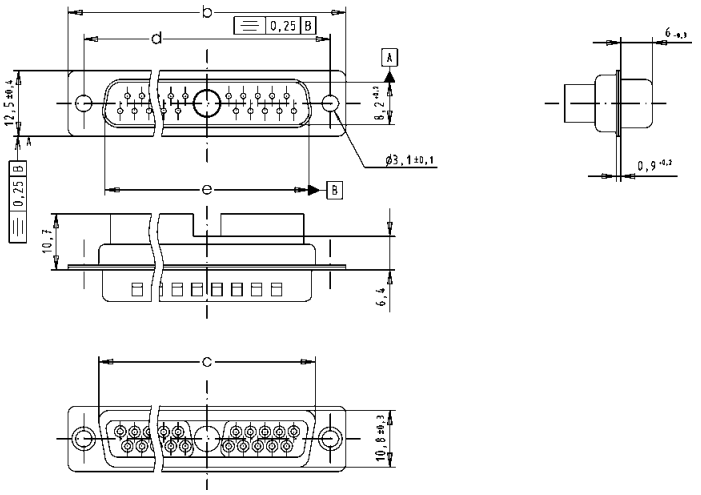

	a	b	c	d	e
11W1	24.7	39.1	27.5	33.30	25.2
21W1	38.5	53.0	41.3	47.04	38.9

Female connectors

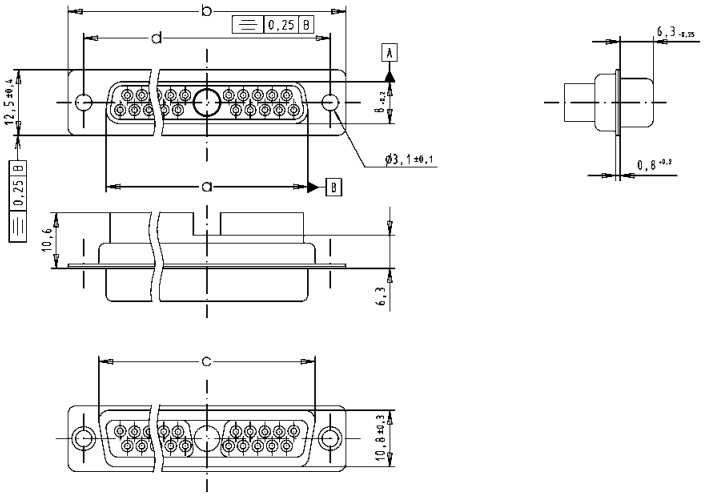

Dimensions in mm

[1] Explanations see page 05.51
Order special contacts separately. See pages 05.69 ff
Board drillings see pages 05.78 ff

Number of contacts

36

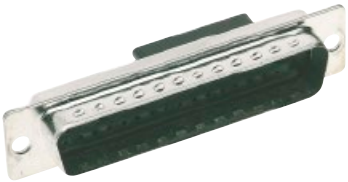

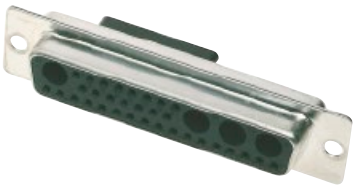

Mixed shells for signal crimp contacts

Identification	No. of contacts[1]	Part number	
		male connector	female connector
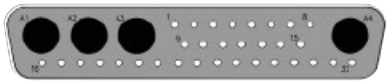	36W4	09 69 512 0364	09 69 502 0364

Male connectors

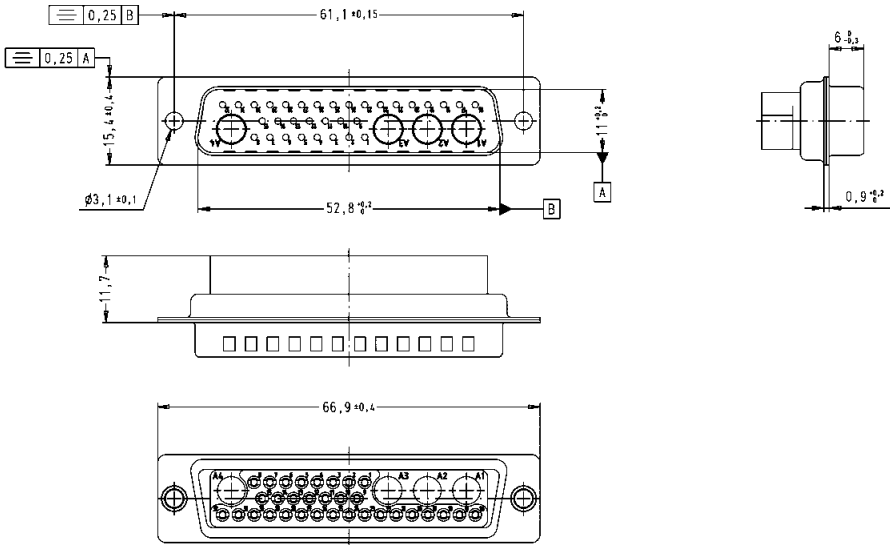

Female connectors

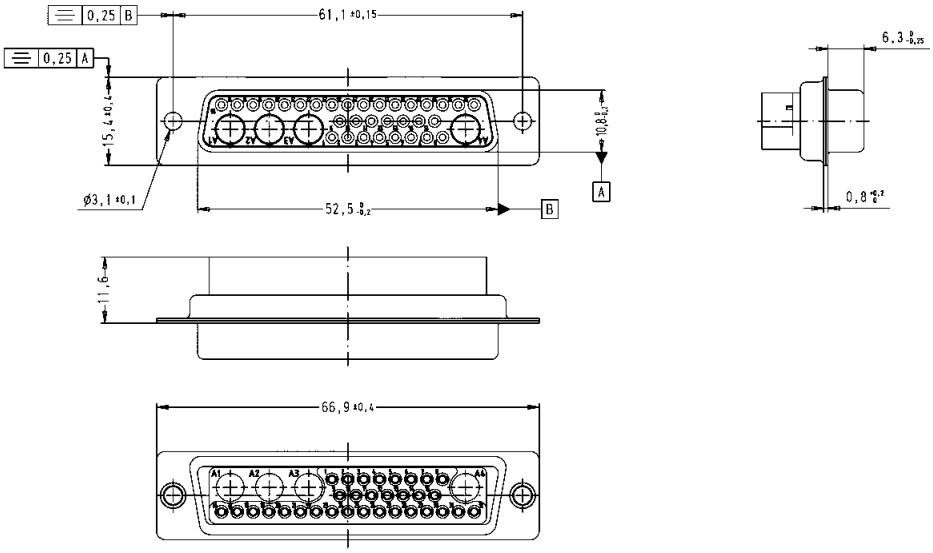

Dimensions in mm

[1] Explanations see page 05.51
Board drillings see pages 05.78 ff
Order special contacts separately. See pages 05.69 ff

	Signal contacts see page 05.70	Coaxial contacts see pages 05.74 – 05.76	Power contacts see pages 05.72 + 05.73	High voltage contacts see page 05.71	Pneumatic contacts see page 05.77
Working current	5 A	2 A	10 A, 20 A, 30 A or 40 A	10 A DC	–
Test voltage $U_{r.m.s.}$	–	750 V / 50 Hz	–	4 kV / 50 Hz	–
Operating voltage	–	–	–	≤ 3 kV	–
Contact resistance	–	≤ 10 mΩ (inner and outer conductor)	≤ 1 mΩ	≤ 3 mΩ (outer conductor)	–
Impedance	–	50 / 75 Ω	–	–	–
Frequency range	–	0 - 2 GHz	–	–	–
Temperature range	–	-55 °C … +135 °C	-55 °C … +155 °C	-55 °C … +125 °C	-10 °C … +60 °C
Mating cycles					
high performance level	≥ 500	≥ 500	≥ 500	–	–
standard performance level	–	≥ 200	≥ 200	≥ 500	–
Mating force	≤ 3.4 N	≤ 7 N/mated pair	≤ 7 N/mated pair	≤ 5 N	–
Unmating force	≥ 0.2 N	≤ 7 N/mated pair	appr. 5 N	appr. 2.5 N	–
Max. pressure	–	–	–	–	7 bars at 20 °C
Materials					
Contacts	Copper alloy	Copper alloy	Copper alloy	Copper alloy	German silver
Plating for PCB applications*					
Mating side / terminating side	**0.76 µm Au / 0.76 µm Au**		**0.76 µm Au / 5 µm Sn** or 0.2 µm Au / 5 µm Sn	**1.3 µm Au / 1.3 µm Au**	–
Inner conductor mating side / terminating side	–	**1.3 µm Au / 1.3 µm Au** or 0.2 µm Au / 0.2 µm Au	–	–	–
Outer conductor mating side / terminating side	–	**0.76 µm Au / 0.2 µm Au** or 0.2 µm Au / 5 µm Sn	–	–	–
Retaining clip	–	Copper alloy	Copper alloy	PI	–
Insulator	–	PBFE/PBTP/PI	–	PTFE	–
O-ring	–	–	–	–	Vitton

Technical characteristics for shells see page 05.04
* **High performance** or standard performance level

Turned crimp contacts

Identification	Wire gauge (mm²)	Part number		
		Male contacts	Female contacts	High-end female contacts
		Performance level 1*	Performance level 1*	Performance level 1*
Individual contacts[1)]	AWG 22-18 0.33-0.82	09 67 000 3576	09 67 000 3476	09 67 000 3676
	AWG 24-20 0.25-0.52	09 67 000 8576	09 67 000 8476	09 67 000 8676
	AWG 26-22 0.13-0.33	09 67 000 5576	09 67 000 5476	09 67 000 5676
	AWG 28-24 0.09-0.25	09 67 000 7576	09 67 000 7476	09 67 000 7676

[1)] Minimum order 100 pieces or multiples of 100

Male contacts

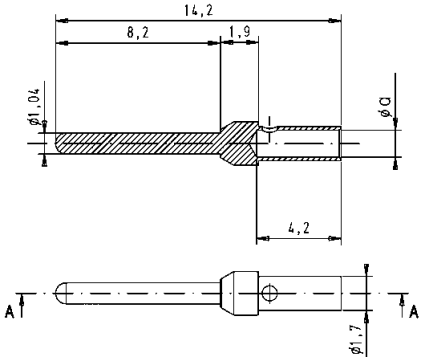

	a	groove
AWG 22-18	1.34	none
AWG 24-20	1.13	1
AWG 26-22	0.88	2
AWG 28-24	0.64	3

Female contacts

Standard

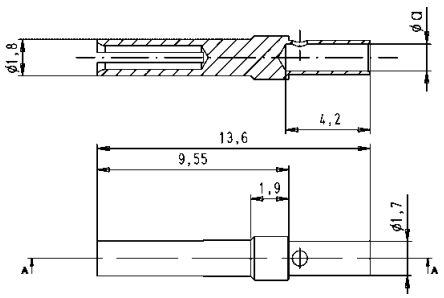

High-end with groove

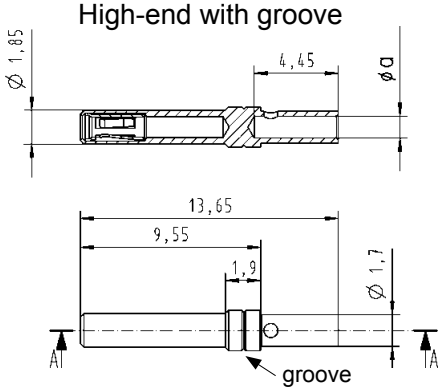

* Performance level 1 as per CECC 75301-802, 500 mating cycles, 10 days 4 mixed gas test – IEC 60512
Use crimp tool with the part no. 09 99 000 0501 and the locator with the part no. 09 99 000 0531. Details see chapter 20

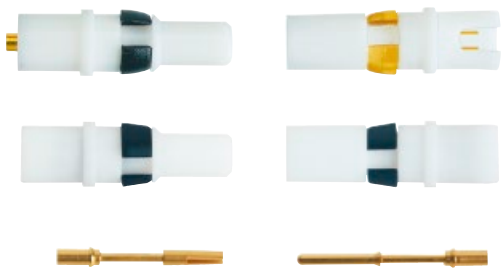

High voltage contacts for cable applications

Identification	Wire gauge (mm²)	Part number	
		Male contacts Plating: 1.3 µm Au[1]	Female contacts Plating: 1.3 µm Au[1]
Straight versions			
with solder termination	AWG 24 - 20 0.25 - 0.56	09 69 281 2550	09 69 181 2550
with crimp termination[2]	AWG 30 - 24 0.05 - 0.25	09 69 282 2550	09 69 182 2550
Right angled versions			
with solder termination	AWG 24 - 20 0.25 - 0.56	09 69 681 2550	09 69 581 2550

Male contacts | Female contacts

Straight versions

with solder termination

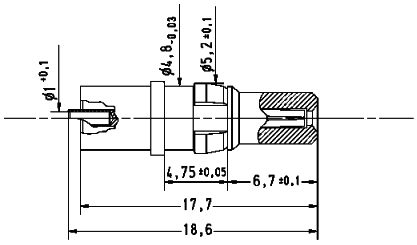

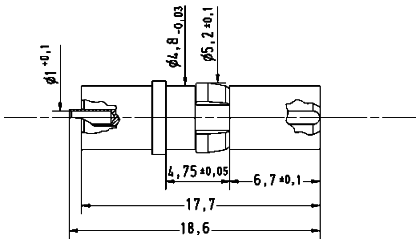

stripping dimensions

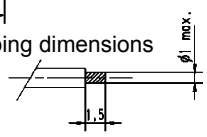

with crimp termination[2]

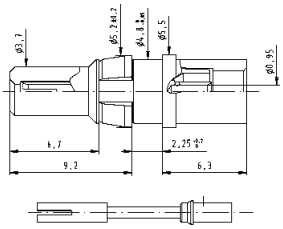

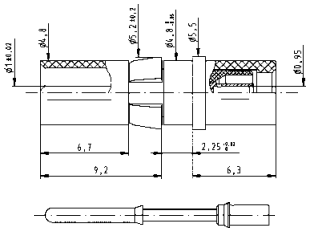

Right angled versions

with solder termination

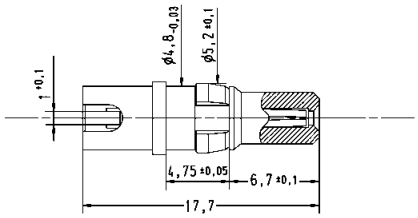

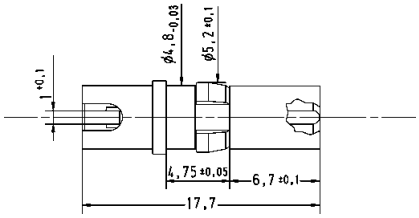

stripping dimensions

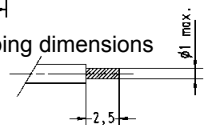

Dimensions in mm

[1] for mating and terminating side
[2] Tooling see chapter 20

Straight power contacts for cable applications

Identification	Rating (A)	Part number	
Performance levels ▶		Performance level 3	S4[1]
Solder version			
Male contacts	10	09 69 281 7420	09 69 281 5420
	20	09 69 281 7421	09 69 281 5421
	30	09 69 281 7422	09 69 281 5422
	40	09 69 281 7423	09 69 281 5423
Short male contacts	20	09 69 281 7821	09 69 281 5821
	40	09 69 281 7823	09 69 281 5823
Female contacts	10	09 69 181 7420	09 69 181 5420
	20	09 69 181 7421	09 69 181 5421
	30	09 69 181 7422	09 69 181 5422
	40	09 69 181 7423	09 69 181 5423
Short female contacts	20	09 69 181 7821	09 69 181 5821
	40	09 69 181 7823	09 69 181 5823
Crimp version[2]			
Male contacts	10	09 69 282 7420	09 69 282 5420
	20	09 69 282 7421	09 69 282 5421
	30	09 69 282 7422	09 69 282 5422
	40	09 69 282 7423	09 69 282 5423
Short male contacts	20	09 69 282 7821	09 69 282 5821
	40	09 69 282 7823	09 69 282 5823
Female contacts	10	09 69 182 7420	09 69 182 5420
	20	09 69 182 7421	09 69 182 5421
	30	09 69 182 7422	09 69 182 5422
	40	09 69 182 7423	09 69 182 5423
Short female contacts	20	09 69 182 7821	09 69 182 5821
	40	09 69 182 7823	09 69 182 5823

[1] S4 = 0.76 µm Au or PdNi equivalent
[2] Tooling see chapter 20

Dimensions see page 05.73

Straight power contacts for cable applications

Identification	Drawing	Dimensions in mm

Male contacts

solder

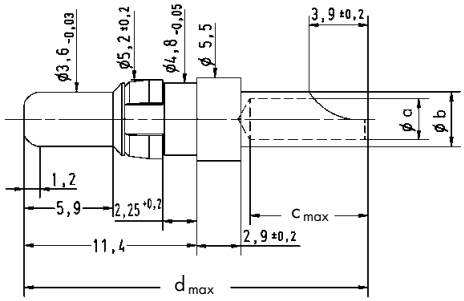

crimp

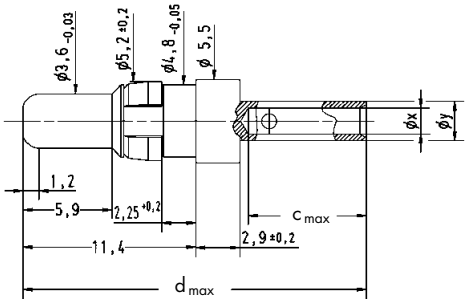

	Rating (A)	ø a -0.1	ø b ±0.05	c_{max}	d_{max}	e	ø x -0.1	ø y ±0.05	AWG
	10	1.8	2.54	7.8	23	7.5	1.7	2.6	16 - 20
	20	2.7	3.63	7.8	23	7.5	2.6	3.6	12 - 14
short version	20	2.7	3.63	4.7	17.4	4.5	2.6	3.6	12 - 14
	30	3.5	4.40	7.8	23	7.5	3.7	4.7	10 - 12
	40	4.8	5.50	7.8	23	7.5	4.6	5.8	8 - 10
short version	40	4.8	5.50	6.4	20	6.1	4.6	5.8	8 - 10

	Rating (A)	min./max. conductor ø	min./max. conductor cross section [mm²]
	10	0.9 to 1.7	0.64 to 2.27
	20	1.8 to 2.6	2.54 to 5.31
short version	20	1.8 to 2.6	2.54 to 5.31
	30	2.2 to 3.7	3.80 to 10.75
	40	2.9 to 4.6	6.61 to 16.62
short version	40	2.9 to 4.6	6.61 to 16.62

Female contacts

solder

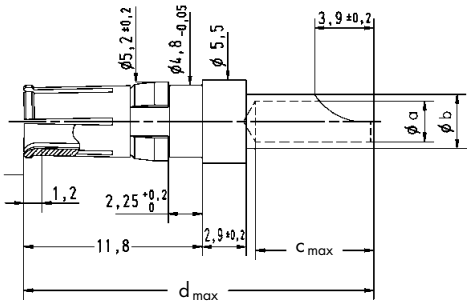

crimp

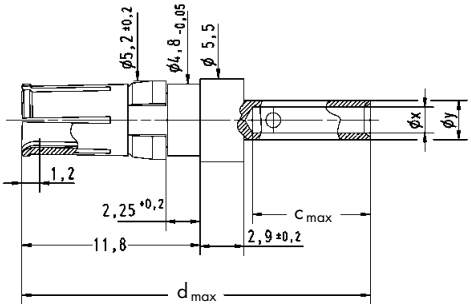

stripping dimensions for male and female contacts

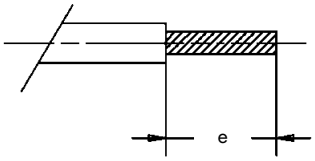

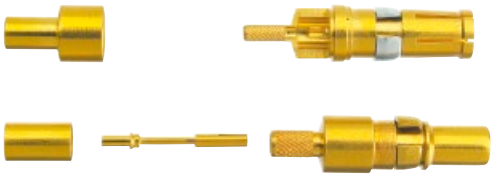

Coaxial contacts for cable applications

Identification	Impedance (Ω)	Part number			
		Straight male contacts		Straight female contacts	
		Performance level 3	S4[1]	Performance level 3	S4[1]
Solder / crimp contact					
for cables RG 174 U, 188 AU, 316 U	50	09 69 281 7140	09 69 281 5140	09 69 181 7140	09 69 181 5140
for cables RG 178 BU, 196 AU, 404 U	50	09 69 281 7141	09 69 281 5141	09 69 181 7141	09 69 181 5141
for cables RG 58 CU, 141 AU	50	09 69 281 7143	09 69 281 5143	09 69 181 7143	09 69 181 5143
for cables RG 179 BU, 187 AU	75	09 69 281 7230	09 69 281 5230	09 69 181 7230	09 69 181 5230
for cables RGD 179	75	09 69 281 7233	09 69 281 5233	09 69 181 7233	09 69 181 5233
Crimp / crimp contact					
for cables RG 174 U, 188 AU, 316 U	50	09 69 282 7140	09 69 282 5140	09 69 182 7140	09 69 182 5140
for cables RG 179 BU, 187 AU	75	09 69 282 7230	09 69 282 5230	09 69 182 7230	09 69 182 5230
for cables RG 59	75	09 69 282 7232	09 69 282 5232	09 69 182 7232	09 69 182 5232
for cables RGD 179	75	09 69 282 7233	09 69 282 5233	09 69 182 7233	09 69 182 5233

Harnessing dimensions (mm)

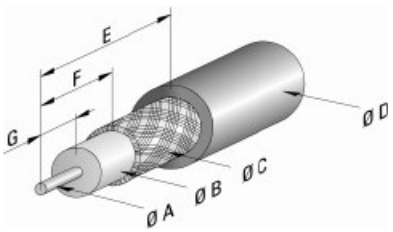

Part number	Ø A	Ø B	Ø C	Ø D	E	F	G
09 69 181 x140 **09 69 281 x140**	0.85	1.9	2.3	3.2	9.5	5.0	3.0
09 69 181 x141 **09 69 281 x141**	0.85	1.2	1.4	2.3	9.5	5.0	3.0
09 69 181 x143 **09 69 281 x143**	1.00	3.0	4.4	5.2	9.5	5.0	3.0
09 69 181 x230 **09 69 281 x230**	0.50	1.9	2.3	3.2	9.5	5.0	3.0
09 69 182 x140 **09 69 282 x140**	0.60	1.9	2.4	3.2	9.0	5.0	3.0
09 69 182 x230 **09 69 282 x230**	0.60	1.9	2.4	3.2	9.0	5.0	3.0
09 69 182 x232 **09 69 282 x232**	0.95	3.8	5.1	6.2	9.0	4.3	3.7
09 69 181 x233 **09 69 281 x233**	0.50	1.9	2.6	3.5	9.5	5.0	3.0
09 69 182 x233 **09 69 282 x233**	0.60	1.9	2.6	3.5	9.3	4.3	3.0

[1] S4 = 0.76 µm Au or PdNi equivalent
Dimensions see pages 05.75 and 05.76
Tooling see chapter 20

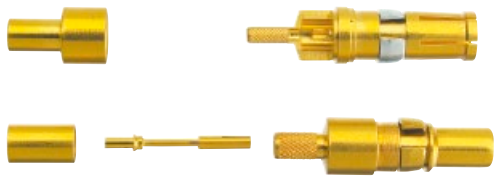

Coaxial contacts for cable applications

Identification | Drawing | Dimensions in mm

Male contacts

Part number	ø a	ø b	ø c	ø d
09 69 281 x140	0.85	1.9	2.6	3.2
09 69 281 x141	0.85	1.2	1.7	2.3
09 69 281 x230	0.50	1.9	2.6	3.2

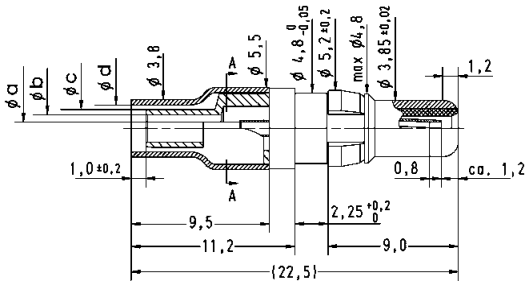

Points of plating thickness measurement

Part number	ø a	ø b	ø c	ø d
09 69 281 x143	1.0	3.0	4.4	5.2

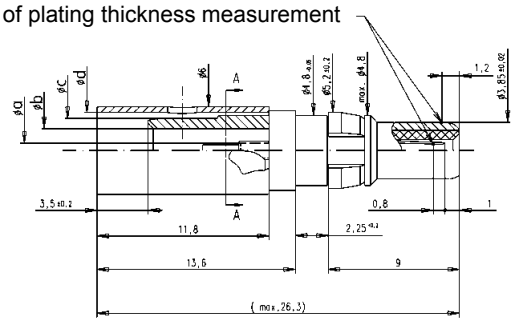

Part number	ø a	ø b	ø c	ø d
09 69 281 x233	0.5	1.9	2.6	3.5

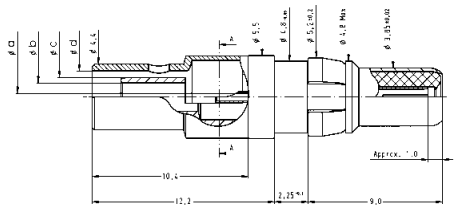

Part number	ø a	ø b	ø c	ø d	ø e
09 69 282 x140	0.6	1.9	2.6	3.2	3.8
09 69 282 x230	0.6	1.9	2.6	3.2	3.8
09 69 282 x233	0.6	1.9	2.6	3.5	4.4

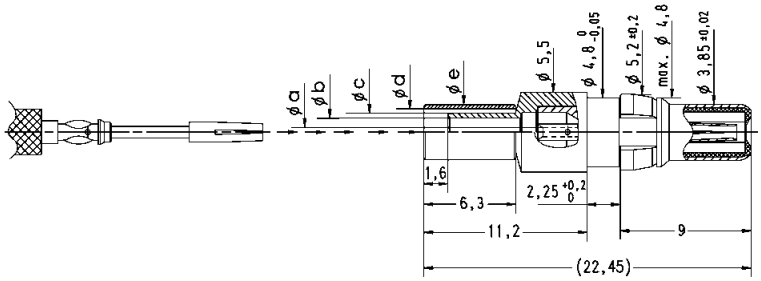

Part number	ø a	ø b	ø c	ø d
09 69 282 x232	0.95	3.8	5.1	6.2

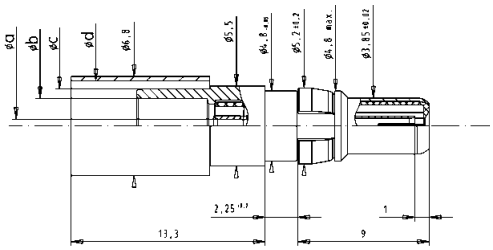

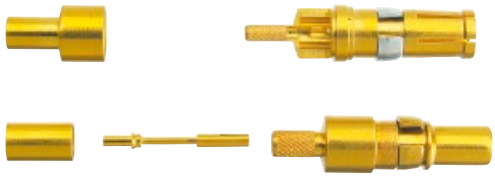

Coaxial contacts for cable applications

Identification | Drawing | Dimensions in mm

Female contacts

Part number	ø a	ø b	ø c	ø d
09 69 181 x140	0.85	1.9	2.6	3.2
09 69 181 x141	0.85	1.2	1.7	2.3
09 69 181 x230	0.50	1.9	2.6	3.2

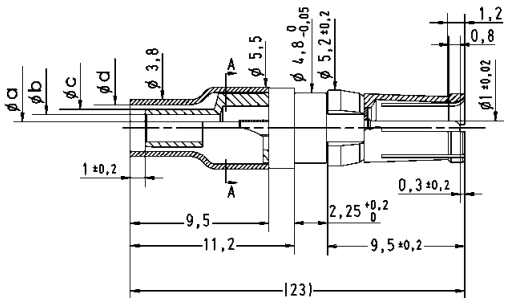

Part number	ø a	ø b	ø c	ø d
09 69 181 x143	1.0	3.0	4.4	5.2

Points of plating thickness measurement

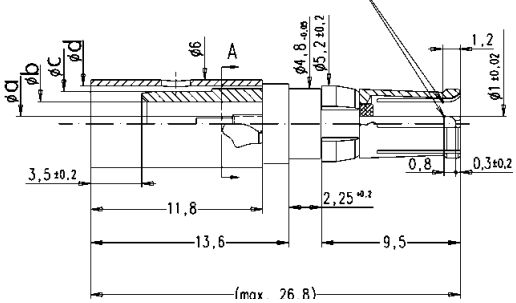

Part number	ø a	ø b	ø c	ø d
09 69 181 x233	0.5	1.9	2.6	3.5

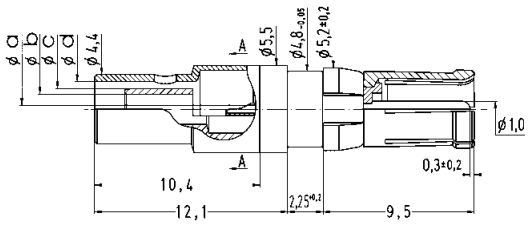

Part number	ø a	ø b	ø c	ø d	ø e
09 69 182 x140	0.6	1.9	2.6	3.2	3.8
09 69 182 x230	0.6	1.9	2.6	3.2	3.8
09 69 182 x233	0.6	1.9	2.6	3.5	4.4

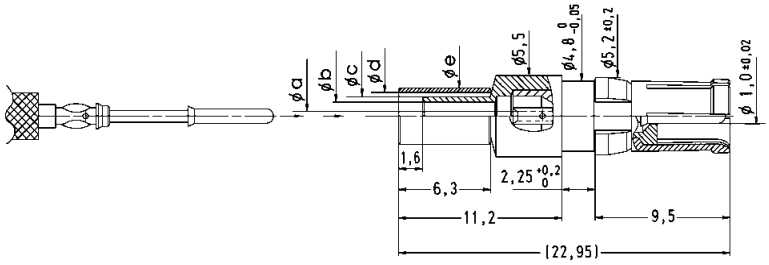

Part number	ø a	ø b	ø c	ø d
09 69 182 x232	0.95	3.8	5.1	6.2

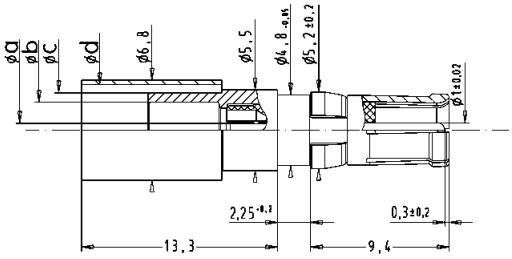

Pneumatic contacts for cable applications

Identification	Inner diameter air tube (mm)	Part number
Male contacts		
	2	09 69 287 0060
	2.6	09 69 287 0061
	3	09 69 287 0062
	4	09 69 287 0063
Female contacts		
	2	09 69 187 0060
	2.6	09 69 187 0061
	3	09 69 187 0062
	4	09 69 187 0063

Male contacts

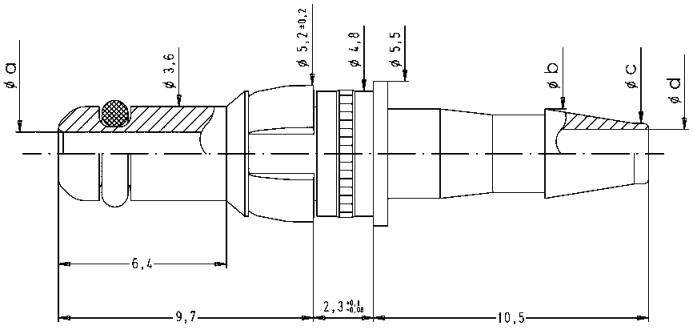

Part number	ø a	ø b	ø c	ø d
09 69 x87 0060	1.45	2.6	1.5	0.95
09 69 x87 0061	1.65	3.1	2.0	1.65
09 69 x87 0062	1.65	3.4	2.3	1.85
09 69 x87 0063	1.65	4.8	3.7	2.95

Female contacts

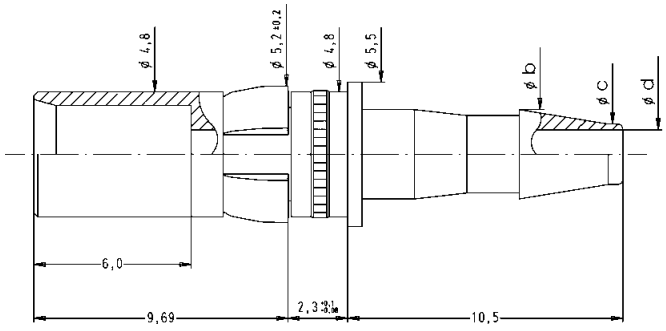

Dimensions in mm

Board drillings for connectors with straight pcb contacts

Pcb hole patterns

In the next pages, the pcb hole pattern is given for the power and the coaxial contact per connector layout. In the case of the power contact, the drilling hole dimension is not mentioned; the table here under provides relevant information according to the current rating of the contact and its version.

Power contact diameter and pcb related drilling diameter

	Straight connectors		Right angled connectors	
Rating	Pin Ø (mm)	Pcb drilling Ø (mm)	Pin Ø (mm)	Pcb drilling Ø (mm)
20 A	2.60	2.9	2.85	3.15
30 A	–	–	3.20	3.50
40 A	3.75	4.0	3.75	4.05

Identification | Drawing | Dimensions in mm

Male connector*

Power contact | Coaxial contact

2W2 / 2W2C

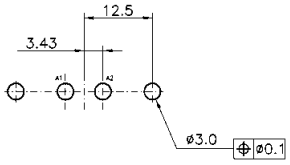

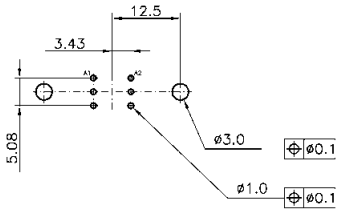

3W3 / 3W3C

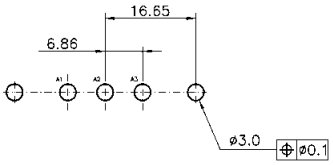

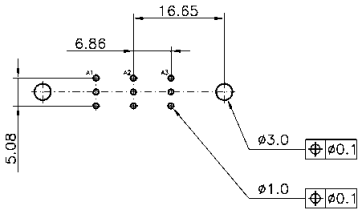

5W1

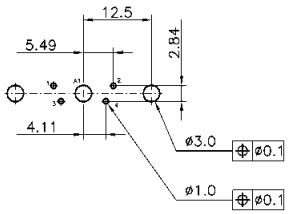

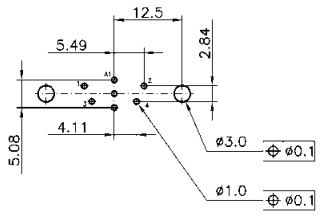

5W5

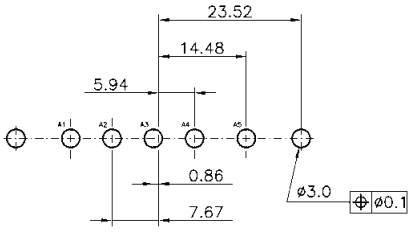

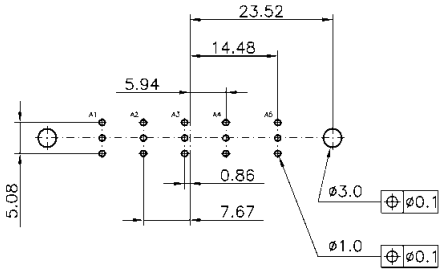

7W2

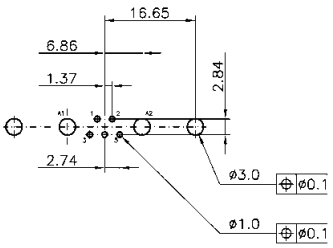

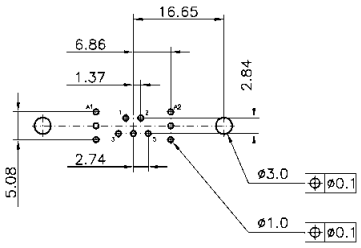

* When using a female connector with straight pcb contacts the board drilling pattern must be mirrored in the Y axis.

Board drillings for connectors with straight pcb contacts

Identification	Drawing	Dimensions in mm
Male connector*	Power contact	Coaxial contact
7W7	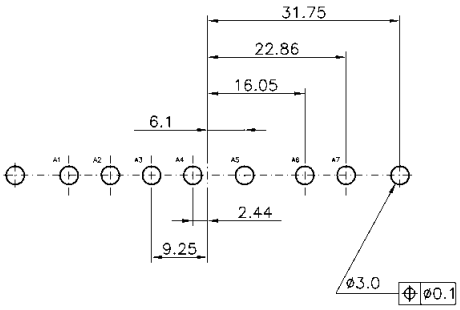	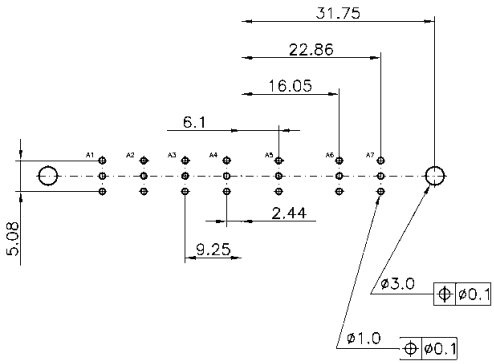
8W8	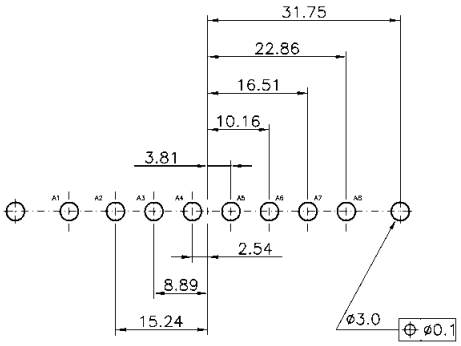	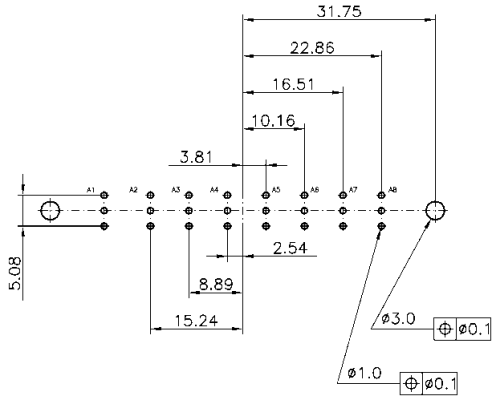
9W4	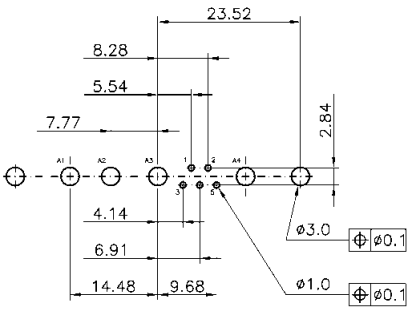	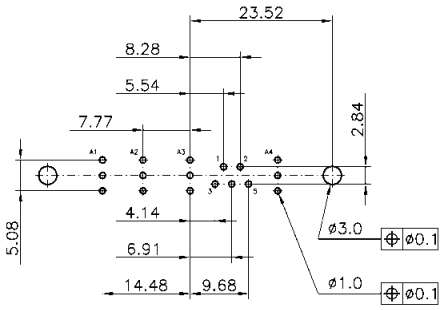
11W1	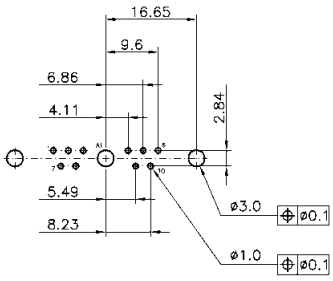	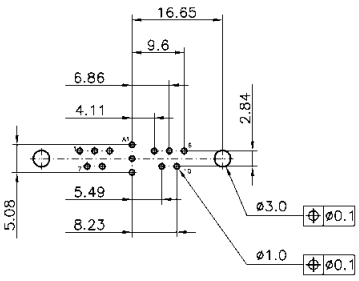

* When using a female connector with straight pcb contacts the board drilling pattern must be mirrored in the Y axis.

Board drillings for connectors with straight pcb contacts

Identification	Drawing		Dimensions in mm
Male connector*	Power contact	Coaxial contact	
13W3	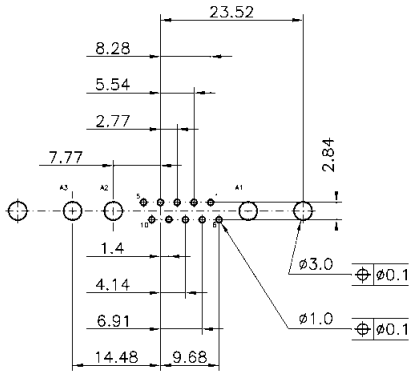	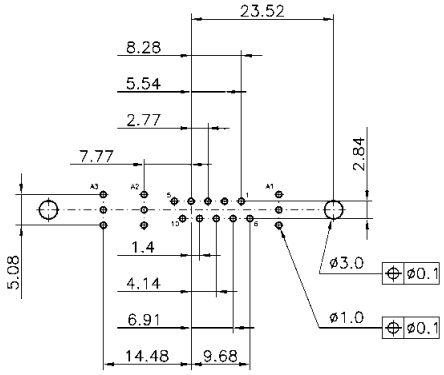	
13W6	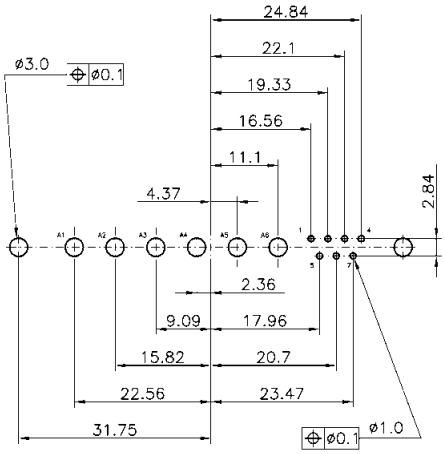	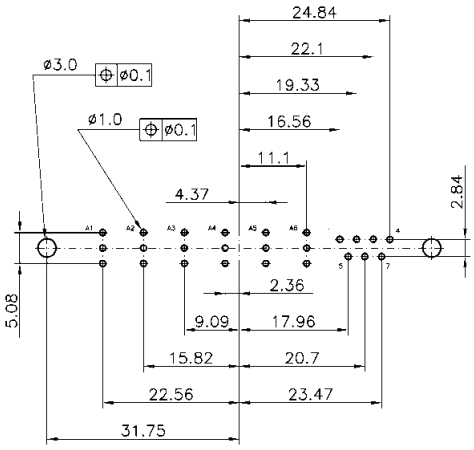	
17W2	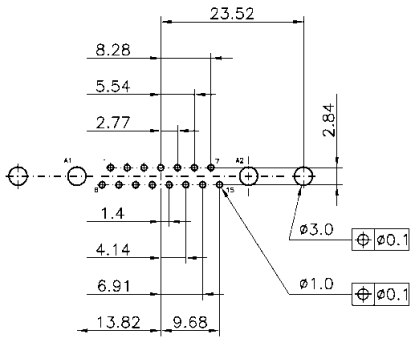	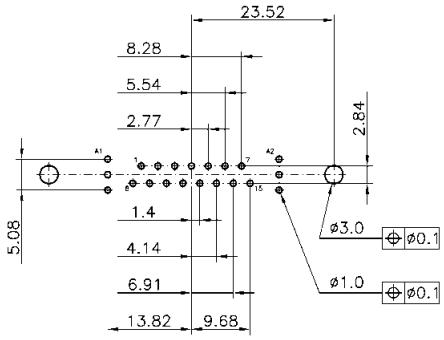	
21W1	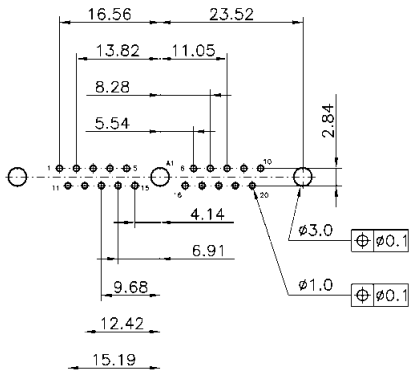	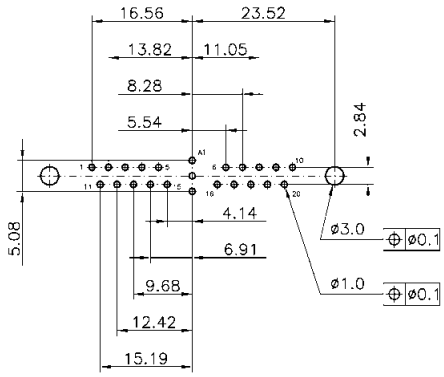	

* When using a female connector with straight pcb contacts the board drilling pattern must be mirrored in the Y axis.

Board drillings for connectors with straight pcb contacts

Identification	Drawing		Dimensions in mm
Male connector*	Power contact	Coaxial contact	
21WA4	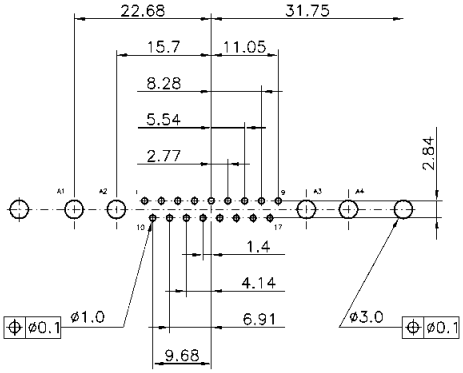	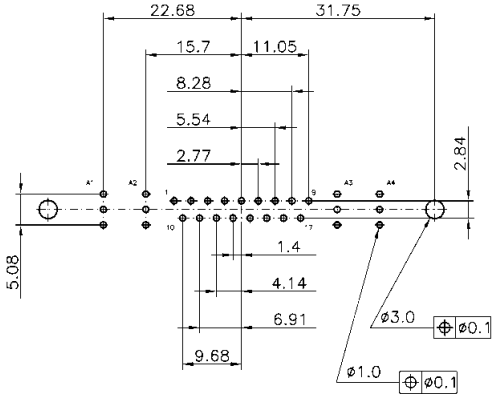	
24W7	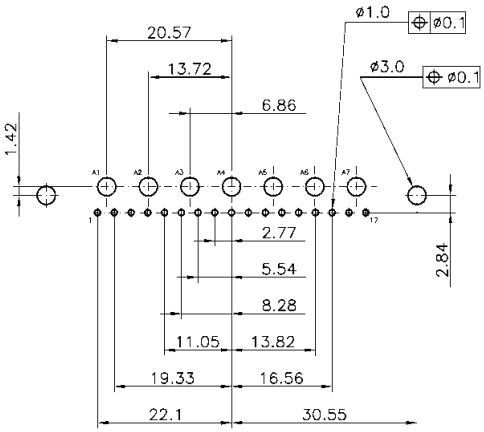	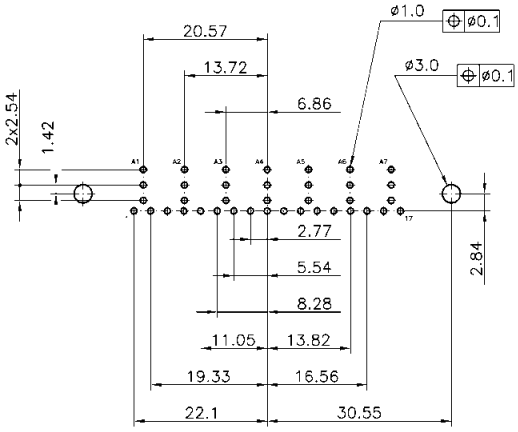	
25W3	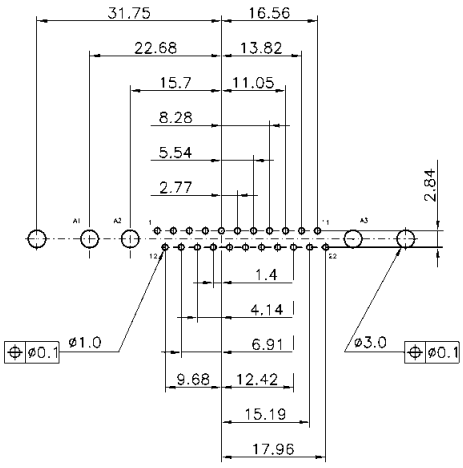	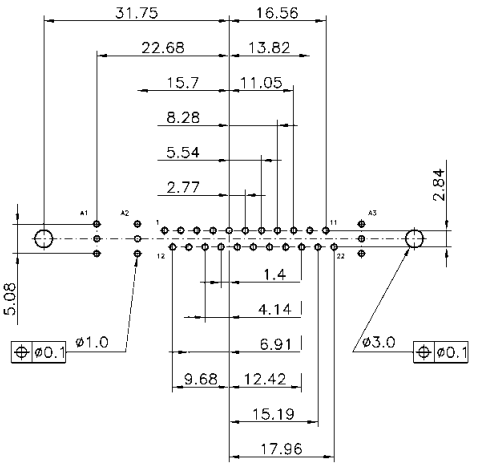	

* When using a female connector with straight pcb contacts the board drilling pattern must be mirrored in the Y axis.

Board drillings for connectors with straight pcb contacts

Identification	Drawing		Dimensions in mm
Male connector*	Power contact	Coaxial contact	
27W2	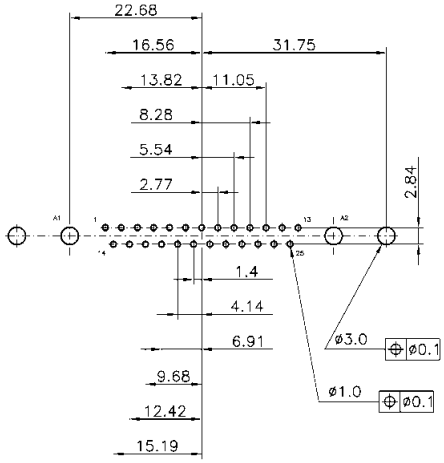	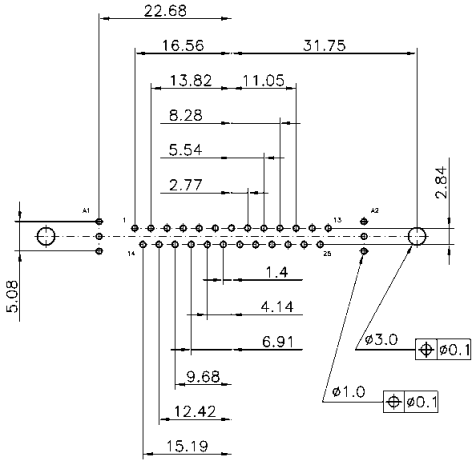	
36W4	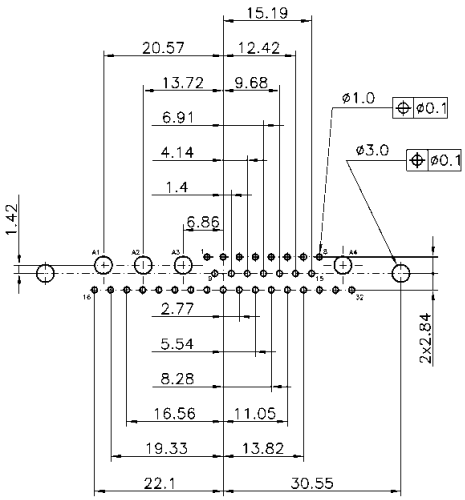	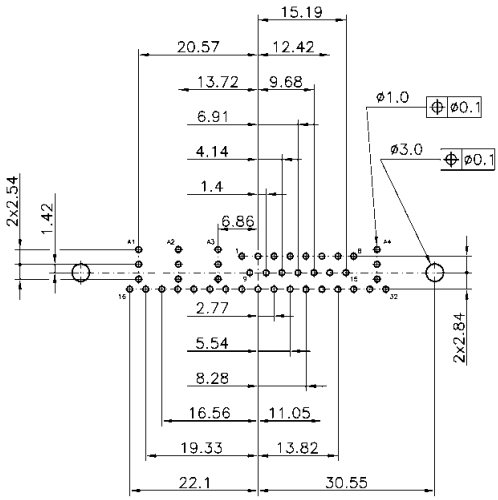	
43W2	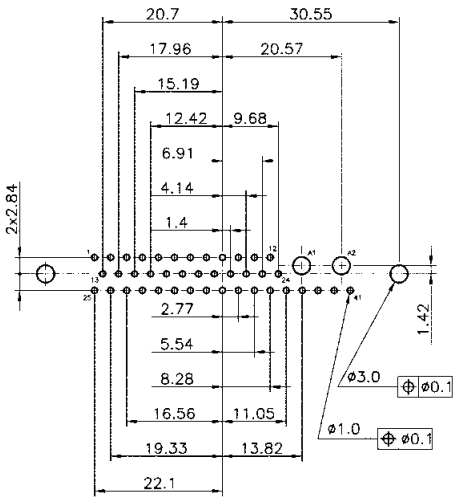	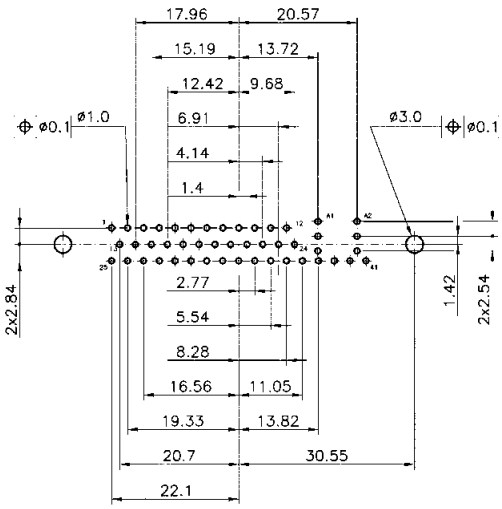	

* When using a female connector with straight pcb contacts the board drilling pattern must be mirrored in the Y axis.

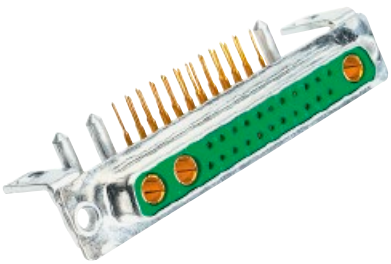

Board drillings for connectors with right angled pcb contacts

Identification	Drawing		Dimensions in mm
Male connector*	Power contact	Coaxial contact	
2W2 / 2W2C	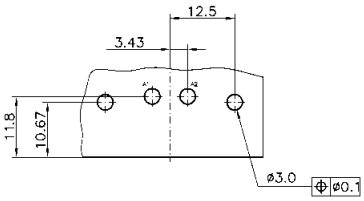	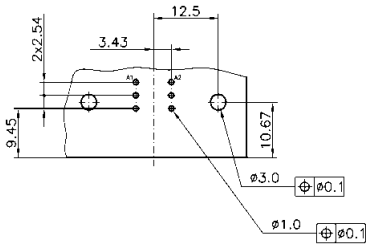	
3W3 / 3W3C	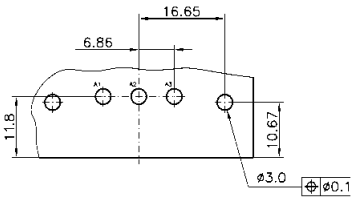	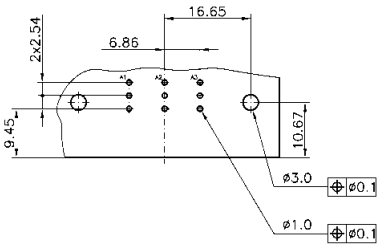	
5W1	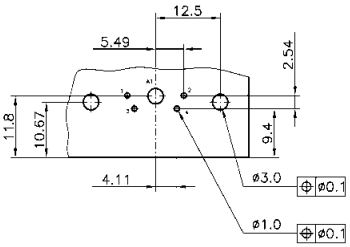	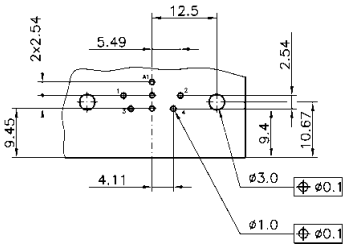	
5W5	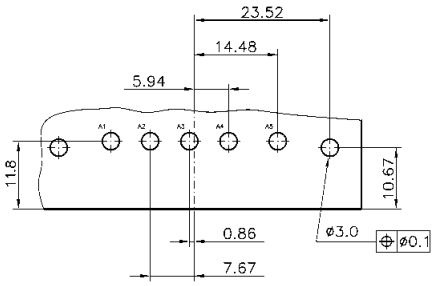	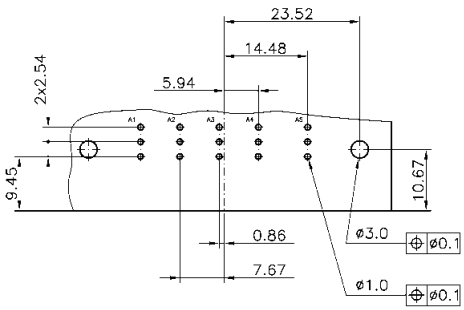	
7W2	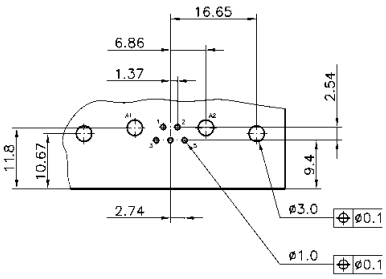	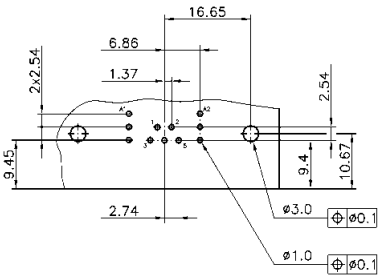	

* When using a female connector with right angled pcb contacts the board drilling pattern must be mirrored in the Y axis.

Board drillings for connectors with right angled pcb contacts

Identification	Drawing		Dimensions in mm
Male connector*	Power contact	Coaxial contact	
7W7	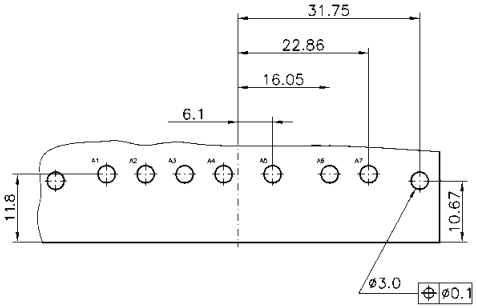	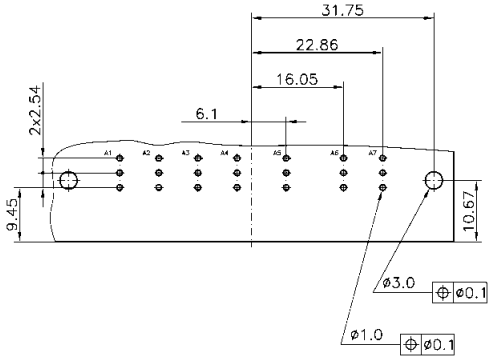	
8W8	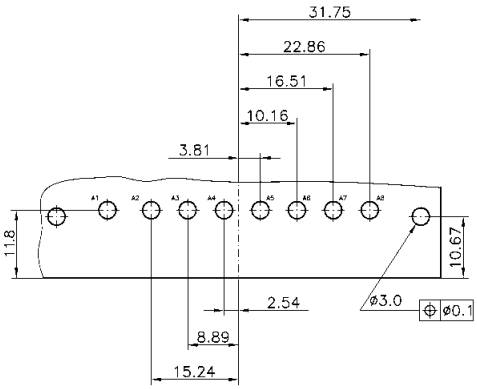	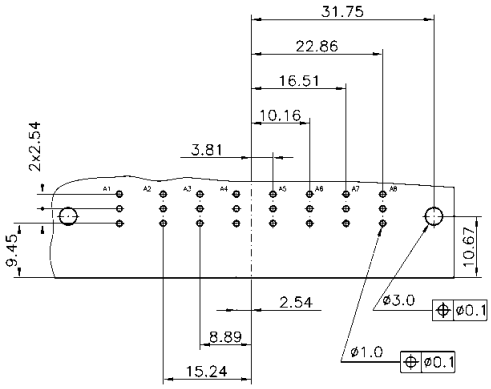	
9W4	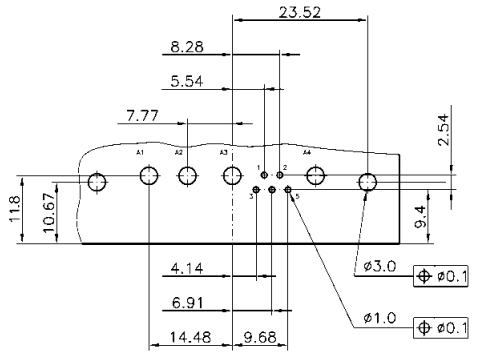	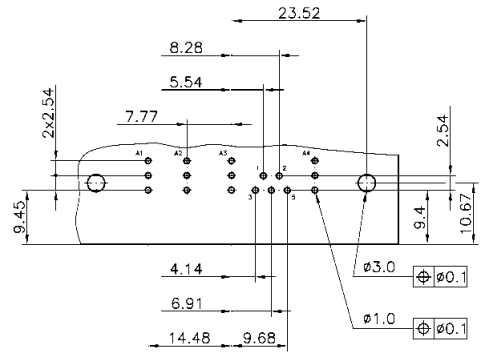	
11W1	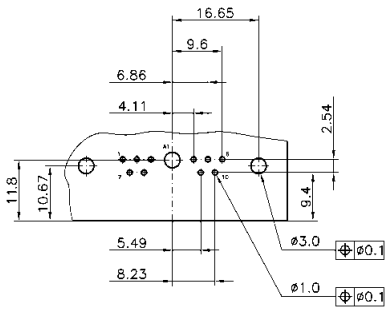	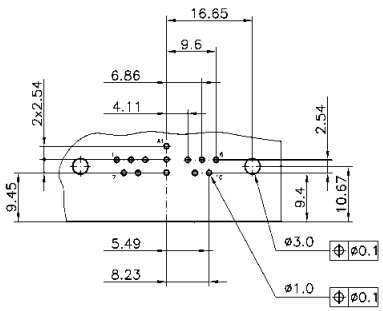	

* When using a female connector with right angled pcb contacts the board drilling pattern must be mirrored in the Y axis.

Board drillings for connectors with right angled pcb contacts

Identification	Drawing		Dimensions in mm
Male connector*	Power contact	Coaxial contact	
13W3	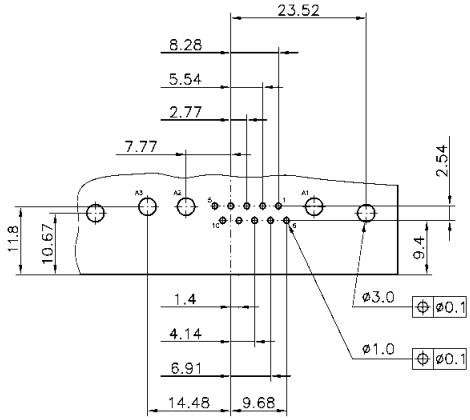	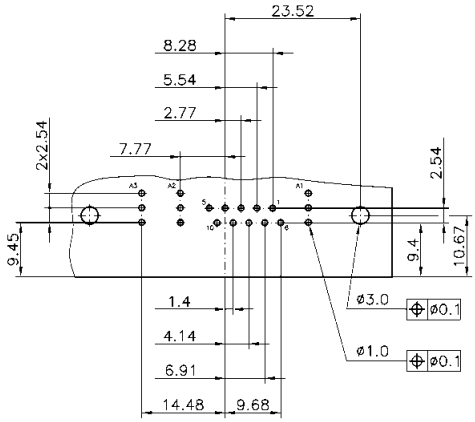	
13W6	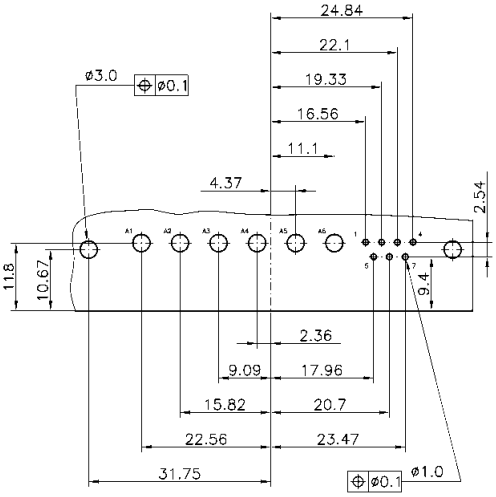	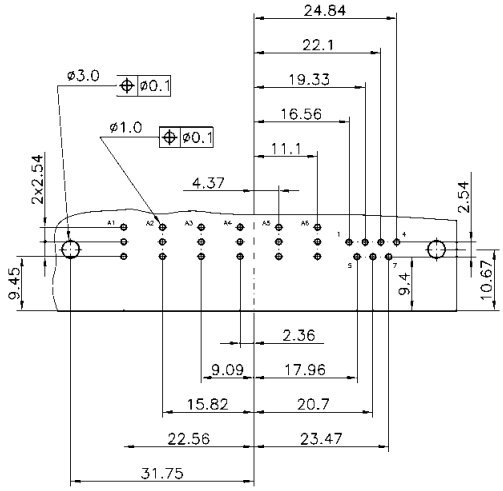	
17W2	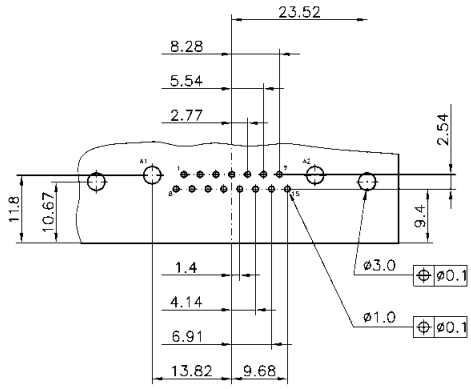	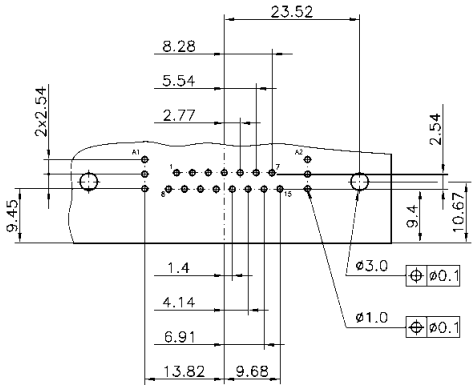	
21W1	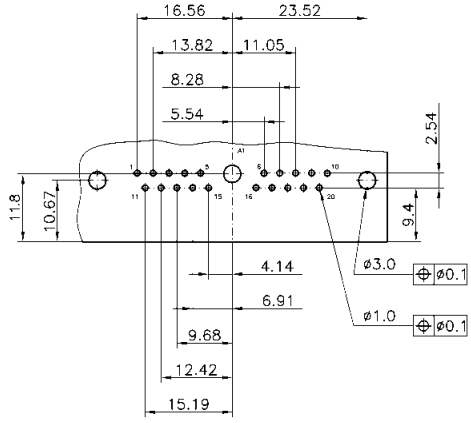	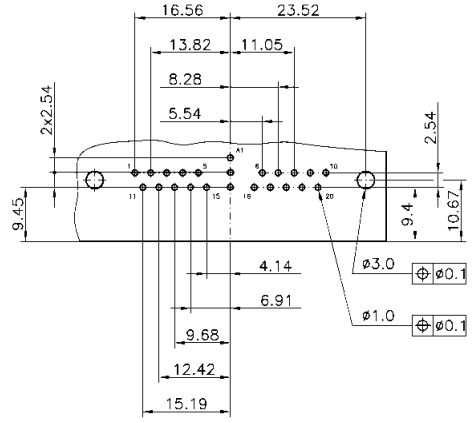	

* When using a female connector with right angled pcb contacts the board drilling pattern must be mirrored in the Y axis.

Board drillings for connectors with right angled pcb contacts

Identification	Drawing		Dimensions in mm
Male connector*	Power contact	Coaxial contact	
21WA4	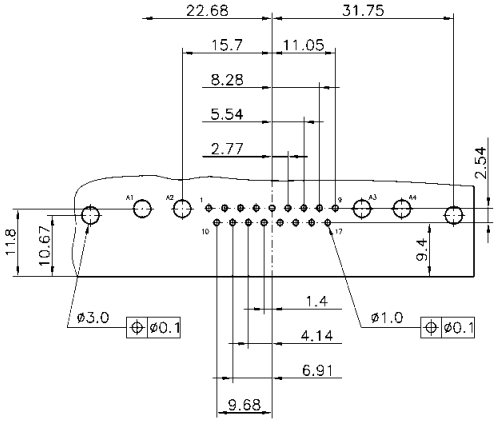	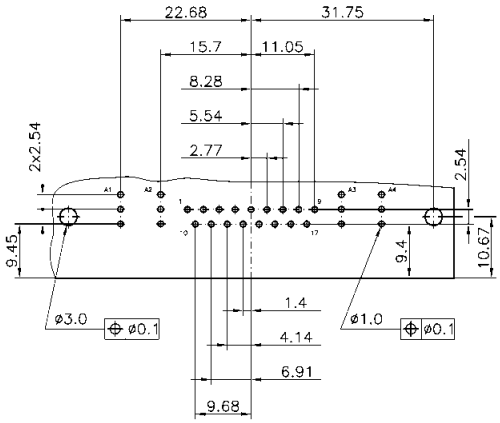	
24W7	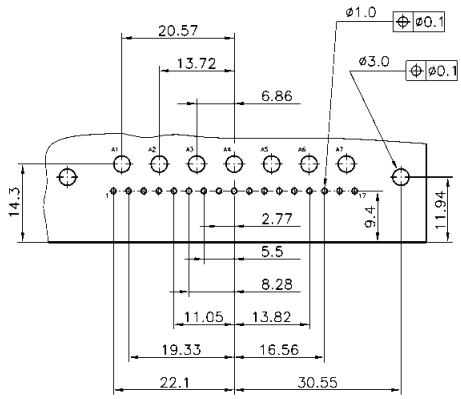	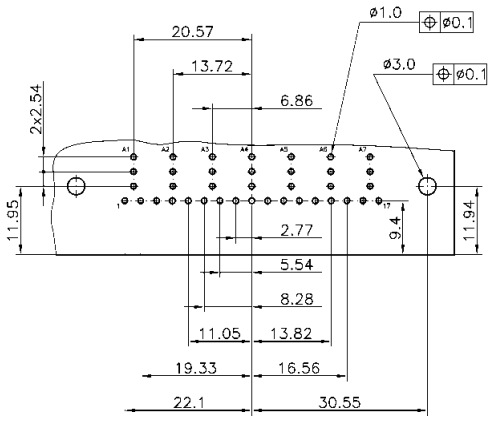	
25W3	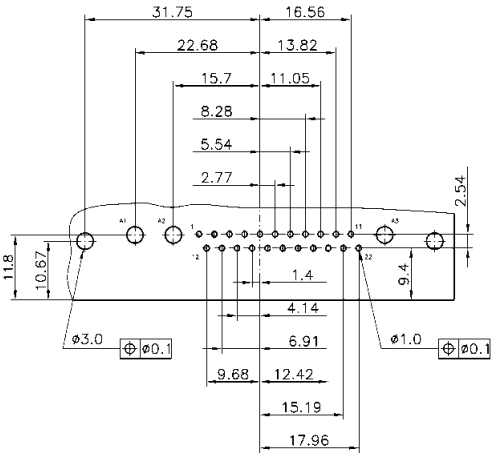	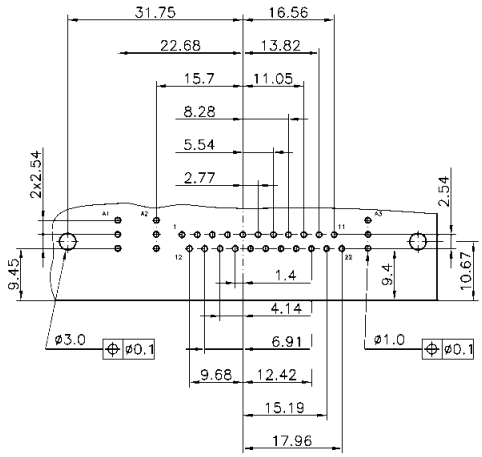	

* When using a female connector with right angled pcb contacts the board drilling pattern must be mirrored in the Y axis.

Board drillings for connectors with right angled pcb contacts

Identification	Drawing		Dimensions in mm
Male connector*	Power contact	Coaxial contact	
27W2	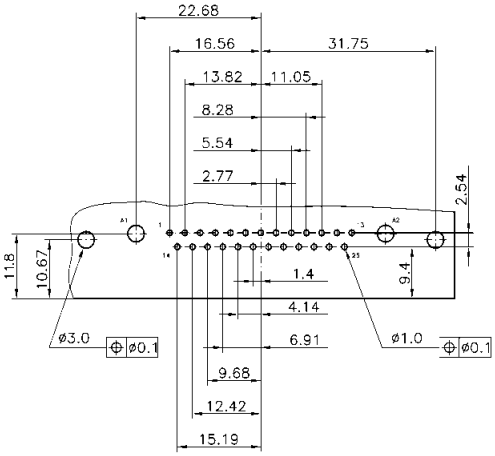	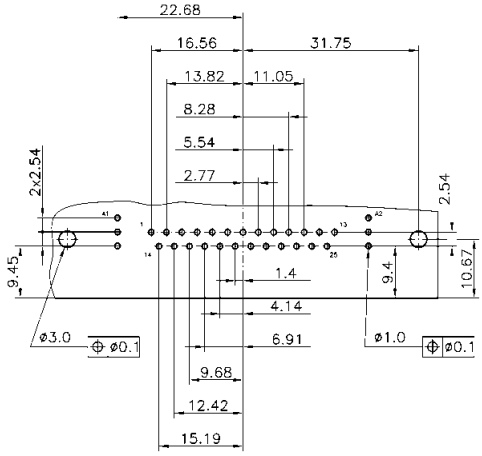	
36W4	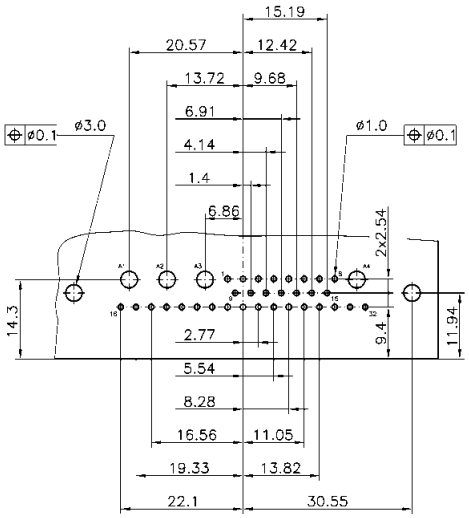	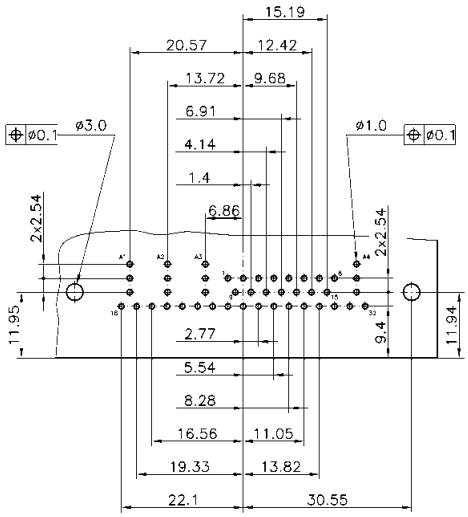	
43W2	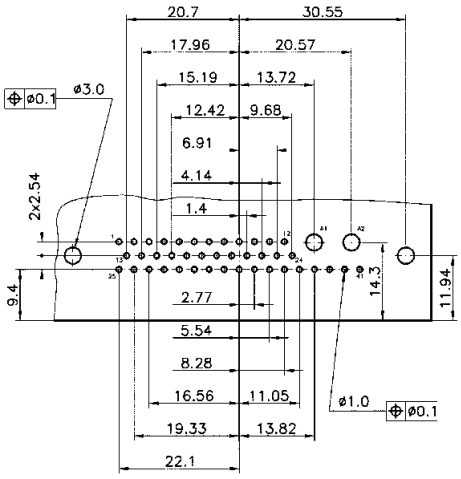	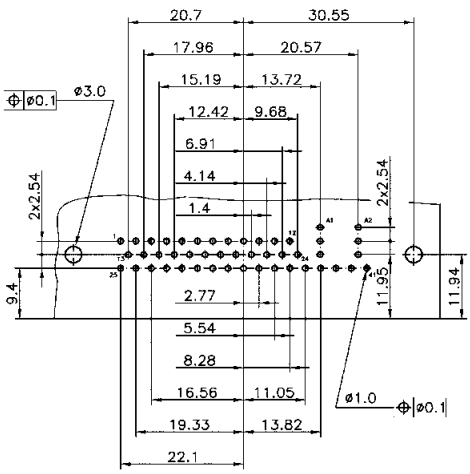	

* When using a female connector with right angled pcb contacts the board drilling pattern must be mirrored in the Y axis.

HARTING customer request form for pcb connectors

1 Connector gender and type

☐ Plug (male contacts)

☐ Receptacle (female contacts)

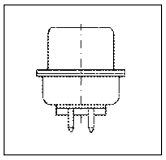

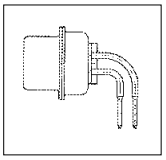

☐ Straight ☐ Right angled

2 Contact arrangement

Standard

☐ 2W2	☐ 7W7	☐ 13W6	☐ 25W3
☐ 3W3	☐ 8W8	☐ 17W2	☐ 27W2
☐ 5W1	☐ 9W4	☐ 21W1	☐ 36W4
☐ 5W5	☐ 11W1	☐ 21WA4	☐ 43W2
☐ 7W2	☐ 13W3	☐ 24W7	

Special configurations (mixed contact genders)

☐ 2W2C ☐ 3W3C

2.1 Any signal contacts?

☐ Yes (fill in questions below) ☐ No (go directly to item 2.2)

☐ Right angled 2.54 mm pitch

☐ Other pitch: _____

2.2 Any power contacts?

☐ Yes (fill in questions below) ☐ No (go directly to item 2.3)

Current rating

☐ 10 A ☐ 30 A

☐ 20 A ☐ 40 A

Termination type

☐ Solder pin for pcb

☐ Press-in for pcb (30 A, straight version only)

Performance level [mating side / termination side]

☐ S4 [0.76 µm Au / 0.2 µm Au]

☐ PL 3 [0.2 µm Au / 5.0 µm Sn]

2.3 Any coaxial contacts?

☐ Yes (fill in questions below) ☐ No (go directly to item 2.4)

Impedance

☐ 50 Ω

☐ 75 Ω

Performance level [mating side inner / outer conductor]

☐ S4 [1.3 µm Au / 0.76 µm Au]

☐ PL 3 [0.2 µm Au / 0.2 µm Au]

2.4 Any high voltage contacts?

☐ Yes ☐ No (go directly to item 2.5)

2.5 Any pneumatic contacts?

☐ Yes (fill in questions below) ☐ No (go directly to item 3)

Tube inner diameter / suitable compressed air tube

☐ 2 mm / PU-2 ☐ 2.6 mm / PU-N4* 2.5

☐ 3 mm / PU-3 ☐ 4 mm / PU-4

HARTING customer request form for pcb connectors

3 Pcb mounting accessories (select appropriate fixing accessories)

3.1 Right angled version

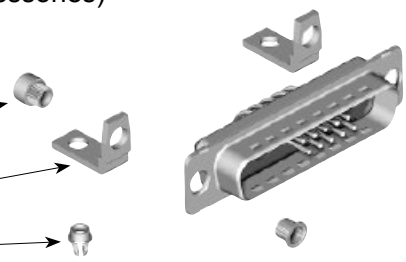

- ☐ Through hole
- ☐ Nut 4-40 UNC
- ☐ Nut M3
- ☐ Metal bracket
- ☐ Snap clip

Screw lock

- ☐ fixed ☐ removable
- ☐ 4-40 UNC ☐ M3

3.2 Straight version

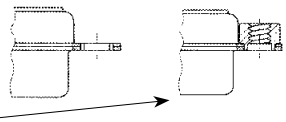

- ☐ Through hole
- ☐ Nut 4-40 UNC
- ☐ Nut M3

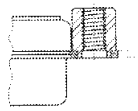

- ☐ Spacer 4-40 UNC
- ☐ Spacer M3

- ☐ Screw lock 4-40 UNC

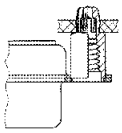

- ☐ Spacer 4-40 UNC + clip
- ☐ Spacer M3 + clip

Spacer + clip and screw lock

- ☐ M3 ☐ 4-40 UNC

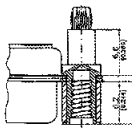

4 Additional information

Pcb thickness: ***(if possible provide pcb layout with plating specifications)***

Operating temperature: ☐ standard ☐ SMC compatible

Is hot plugging required ☐ No ☐ Yes Short description: _____

Is blind mating feature required? ☐ No ☐ Yes (provide precise requirements)

Name: _____ Drawing: ☐ no ☐ yes

Company: _____ Samples: ☐ no ☐ yes, quantity

Address: _____ Volume (pcs./year): _____

_____ _____

Phone: _____ Special requirements: _____

Fax: _____ _____

E-Mail: _____ _____

Interference – Yesterdays problem!

In a fast developing technological environment the management of electromagnetic interference is becoming more challenging.

Therefore HARTING developed a range of filter solutions to help designers of electronic equipments to achieve the demanding goal of electromagnetic compatibility.

HARTING offers a wide range of solutions by the integration of a filter inside one of the most standard I/O ports on the market; the D-Sub.

From standard simple ferrite-filter solution to complex customized high performance filters, you will be able to find in the HARTING filter D-Sub range the adequate solution to protect your application from any introduction or radiation of noise through D-Sub port apertures.

Advantages

Wide range:

- 9, 15, 25 and 37 contact versions
- Various terminations such as solder buckets, straight and right angled solder pins
- A large range of accessories
- High performance (C-filter) as well as simple, quick and cost effective solutions (ferrite-filter)

Compatible with standard wave and lead-free reflow soldering (C-filter)

Same layout and shell dimensions as standard D-Sub connectors, no modification of PCB design necessary

Elimination of ringing, crosstalk phenomenon thanks to specific multilayer PCB used in C-filter design.

Flexible filter structure allowing a wide range of customization:

- Filter value (even pin by pin approach)
- Pi-filter
- Dielectric withstanding and working voltage
- Specific ESD / lightening protection

HARTINGs broad Filter range

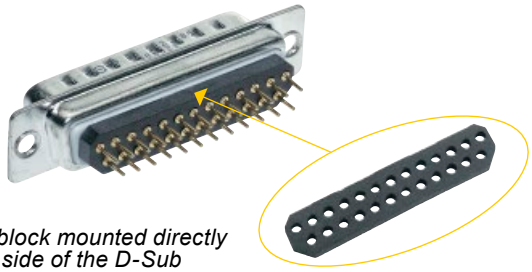

Ferrite block mounted directly on rear side of the D-Sub

Ferrite-filter
Ferrite-filter D-Subs providing a low level of filtering thanks to simple blocks of inductive ferrite attached to the back end of the connectors.
Providing a few dB attenuation only at high frequencies HARTING ferrite-filter D-Subs represent a cost effective solution in applications where the emission level is close to the limit.

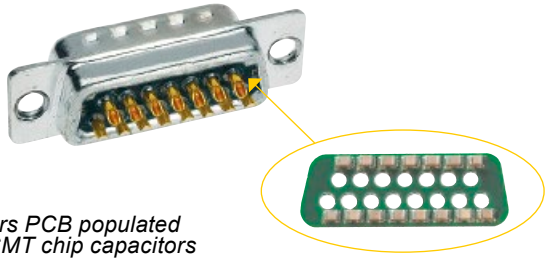

4 layers PCB populated with SMT chip capacitors

C-filter
To address higher EMI disturbances HARTING propose a comprehensive range of C-filter D-Sub connectors. HARTING C-filter D-Sub integrates a patented 4 layer printed circuit board equipped with chip capacitors. This patented solution provides complete protection of the I/O port due to the filtering performance of the capacitors and the screening effect of the PCB. Further more the 4 layers PCB also limits the ability of interference to enter the equipment through the D-Sub aperture. Available in 4 standard filter values 47, 470, 1000 and 3900 pF HARTING C-filter D-Subs represent for all designers a smart filtering solution allowing replacement of a “defective” port by a filtered one without any change of the PCB design.

Filter adapter
To support engineers in the diagnosis of EMI disturbances HARTING has developed, in addition to its filter series a range of male/female filter D-Sub adapters.
These back-to-back adapters can be used as testing tools and replaced later on in production directly by a filtered D-Sub connector.

Number of contacts	9, 15, 25, 37
Working current	7.5 A max.
Working voltage	250 V AC max.
Dielectric withstanding voltage	500 V AC for 1 minute
Contact resistance	≤ 15 mΩ
Insulation resistance	≥ 1000 MΩ
Temperature range	-55 °C … +105 °C
Terminations	a) Solder buckets AWG 20 b) Solder pins for P.C.B. holes Ø 1 ± 0.05 mm c) Solder pins, angled 90° for P.C.B. holes Ø 1 ± 0.05 mm
Materials	
Insulation	PBT, flame retardant acc. to UL 94-V0
Contacts	Copper alloy
Contact surface	
Performance level	Performance level 3, as per IEC 60807-2, IEC 60512-25-2
Metal shell	Steel (tin-plated)

Contact arrangement

View from termination side

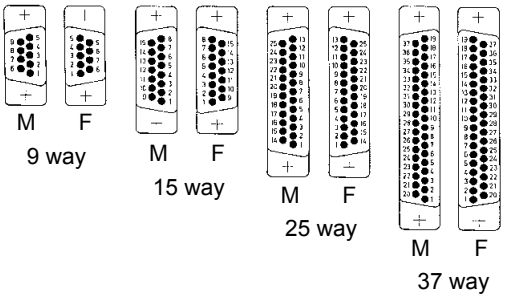

M = Male connector
F = Female connector

Mating conditions as per CECC 75301

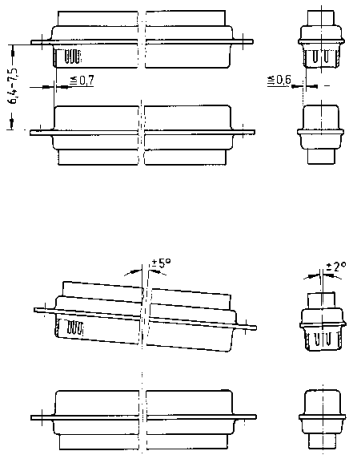

Minimum insertion loss

Frequency [MHz]	Attenuation [dB]
1	0.5
10	1.0
50	2.5
100	3.0
500	3.5
1000	4.0

Number of contacts

9–25

Solder pins, straight, through hole

Identification	No. of contacts	Part number	
		male connectors	female connectors
Connectors with ferrite-filter	9	09 64 122 7800	09 64 112 7800
	15	09 64 222 7800	09 64 212 7800
	25	09 64 322 7800	09 64 312 7800

Male connector

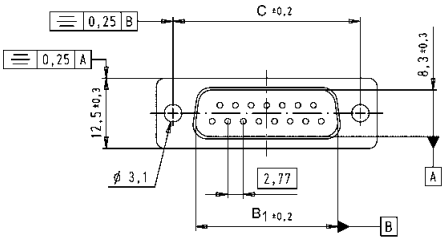

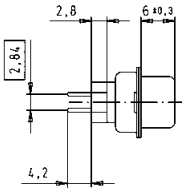

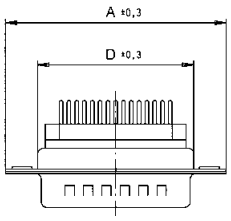

No. of contacts	A	B_1	B_2	C	D
9	30.8	16.92	16.3	25.0	19.2
15	39.2	25.25	24.6	33.3	27.7
25	53.1	38.96	38.3	47.1	41.1

Female connector

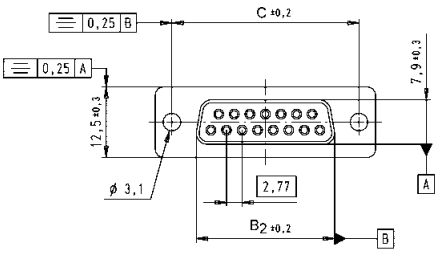

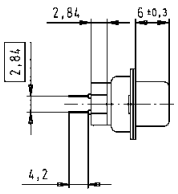

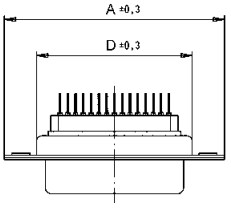

Board drillings

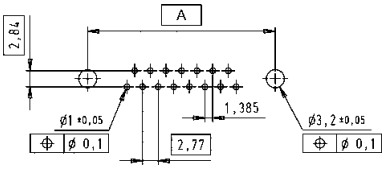

Dimensions in mm

Number of contacts

9–37

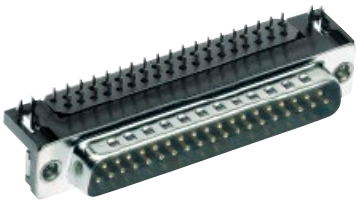

Solder pins, right angled, board lock and clinch nut

Identification	No. of contacts	Part number	
		male connectors	female connectors
Connectors with ferrite-filter	9	09 64 123 7802	09 64 113 7802
	15	09 64 223 7802	09 64 213 7802
	25	09 64 323 7802	09 64 313 7802
	37	09 64 423 7802	09 64 413 7802

Male connector

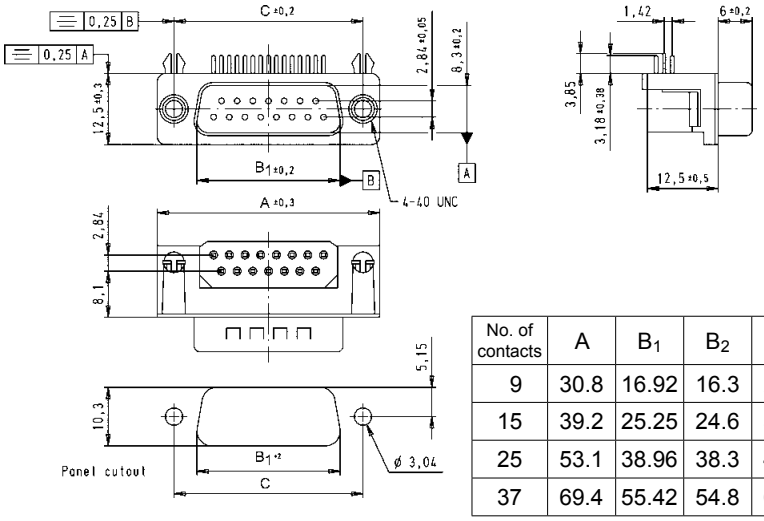

No. of contacts	A	B_1	B_2	C	E	F
9	30.8	16.92	16.3	25.0	3	4
15	39.2	25.25	24.6	33.3	6	7
25	53.1	38.96	38.3	47.1	11	12
37	69.4	55.42	54.8	63.5	17	18

Female connector

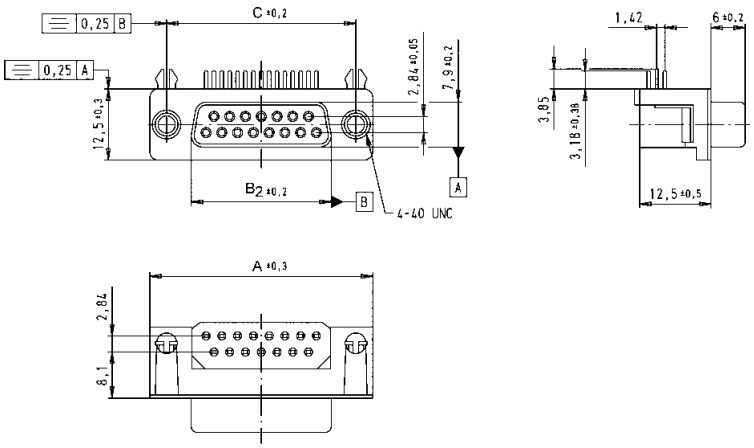

Board drillings

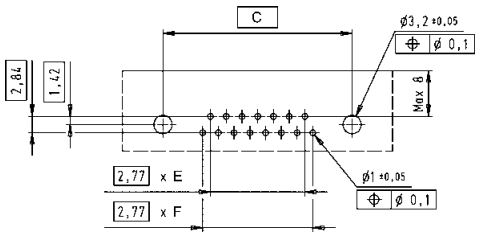

Dimensions in mm

Number of contacts

9–37

Solder buckets, through hole

Identification	No. of contacts	Part number	
		male connectors	female connectors
Connectors with ferrite-filter	9	09 64 121 7800	09 64 111 7800
	15	09 64 221 7800	09 64 211 7800
	25	09 64 321 7800	09 64 311 7800
	37	09 64 421 7800	09 64 411 7800

Male connector

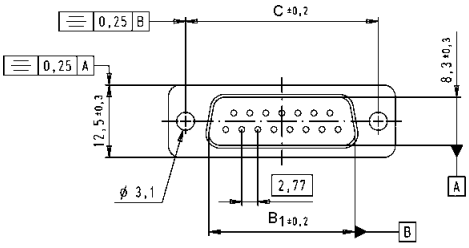

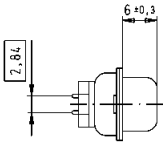

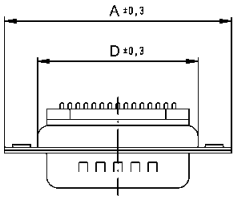

No. of contacts	A	B_1	B_2	C	D
9	30.8	16.92	16.3	25.0	19.2
15	39.2	25.25	24.6	33.3	27.7
25	53.1	38.96	38.3	47.1	41.1
37	69.4	55.42	54.8	63.5	57.3

Female connector

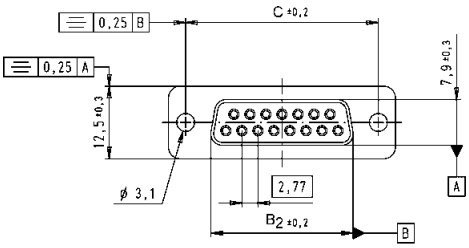

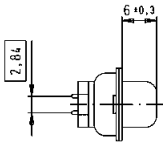

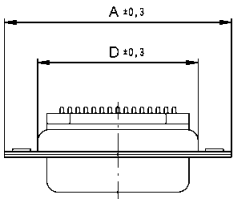

Dimensions in mm

Number of contacts	9, 15, 25, 37
Working current	7.5 A max. (connectors) 6.5 A max. (filter adapters)
Working voltage	100 V max. for standard capacitance values – higher working voltages are available as specific.
Dielectric withstanding voltage	250 V DC max. – higher dielectric withstanding voltages are available as specific (see page 05.112)
Contact resistance	≤ 10 mΩ
Insulation resistance	≥ 1000 MΩ
Temperature range	-55 °C … +125 °C (connectors) Heat deflection temperature limit according to DIN 53461: … +255 °C -20 °C … +125 °C (filter adapters)
Terminations	a) Solder buckets max. 0.8 mm² b) Solder pins Ø 0.6 mm for P.C.B. holes Ø 0.8/1 mm c) Solder pins, angled 90° Ø 0.6 mm for P.C.B. holes Ø 0.8/1 mm
Materials	
Insulation	PCT, glass-fibre filled, flame retardant acc. to UL 94-V0 Colour: natural
Contacts	Copper alloy Male and female contacts are turned
Contact surface	
Contact zone	Selectively plated according to performance level
Performance level	Performance level 2, as per CECC 75 301-802, 250 mating cycles, 4 days 4 mixed gas test – IEC 60512
Metal shell	Steel

Contact arrangement

View from termination side

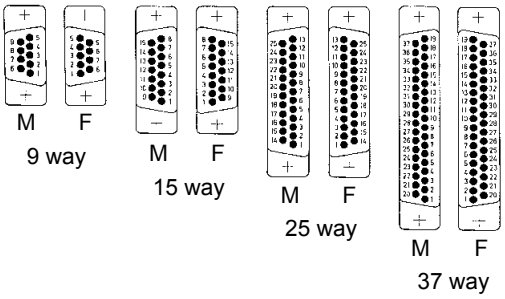

M = Male connector
F = Female connector

Mating conditions as per CECC 75301

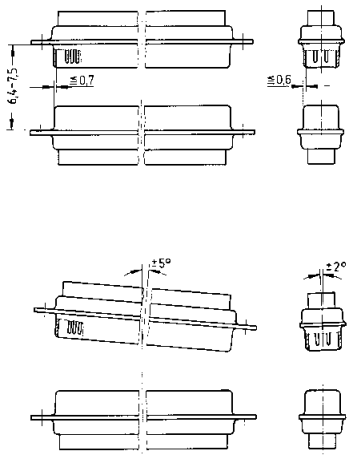

Pi filters are only available for male connectors

Attenuation characteristics for standard capacitance values

Min. insertion loss

Capacitance [pF][1] / Frequency [MHz]	Attenuation (in dB) vs. frequency [MHz]						
	1	5	10	50	100	500	1000
47						30	35
470			1	11	16	35	32
1000		1	3	12	24	38	30
3900	1	6	11	25	35	38	32

[1] Capacitance tolerance = ± 20 % (For other capacitor values see pages 05.112 ff).

Measured in 50 Ω system according to MIL-STD-220, no load.

Working voltage: 100 V max. for standard capacitance values – higher working voltages are available as specific.

Dielectric withstanding voltage: 250 V DC max. – higher dielectric withstanding voltages are available as specific (see page 05.112)

Typical insertion loss for different filters (measured)

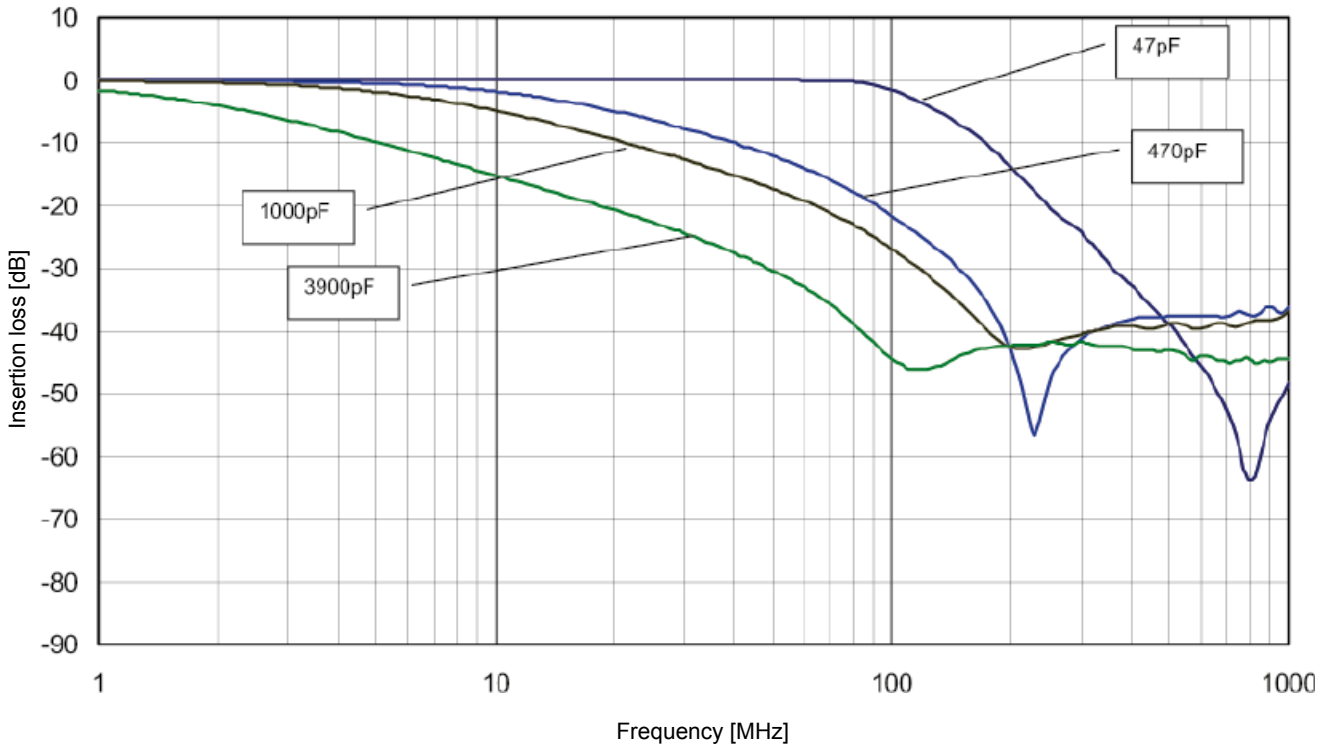

Number of contacts

9–37

Filter adapters

Identification	No. of contacts	Part number
Male / female filter adapters with C filter		
	9	09 64 100 72 . .
	15	09 64 200 72 . .
	25	09 64 300 72 . .
	37	09 64 400 72 . .

Please insert digit for capacitance

47 pF ▶	10
470 pF ▶	20
1000 pF ▶	30
3900 pF ▶	40

Dimensions

	A	B
9	32.8	24.99
15	41.1	33.32
25	55.0	47.04
37	71.3	63.50

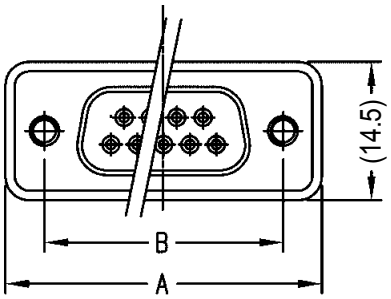

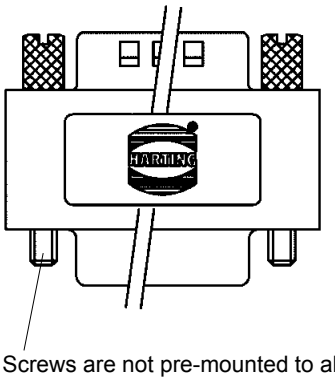

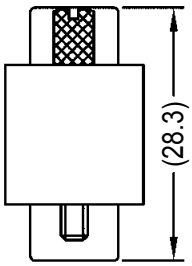

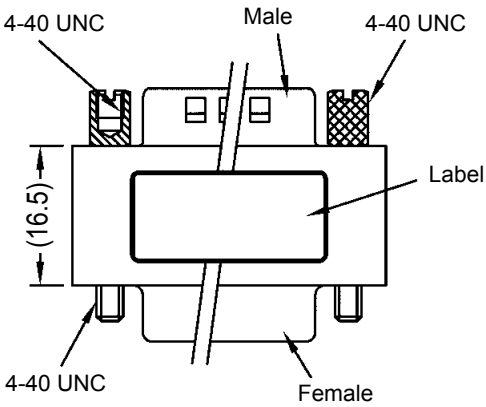

Screws are not pre-mounted to allow mounting from any ends

Dimensions in mm

Number of contacts

9–37

Turned solder pins, straight, through hole

Identification	No. of contacts	Part number	
		male connectors	female connectors
Connectors with **47 pF** C filter	9	09 64 122 7210	09 64 112 7210
	15	09 64 222 7210	09 64 212 7210
	25	09 64 322 7210	09 64 312 7210
	37	09 64 422 7210	09 64 412 7210
Connectors with **470 pF** C filter	9	09 64 122 7220	09 64 112 7220
	15	09 64 222 7220	09 64 212 7220
	25	09 64 322 7220	09 64 312 7220
	37	09 64 422 7220	09 64 412 7220
Connectors with **1000 pF** C filter	9	09 64 122 7230	09 64 112 7230
	15	09 64 222 7230	09 64 212 7230
	25	09 64 322 7230	09 64 312 7230
	37	09 64 422 7230	09 64 412 7230
Connectors with **3900 pF** C filter	9	09 64 122 7240	09 64 112 7240
	15	09 64 222 7240	09 64 212 7240
	25	09 64 322 7240	09 64 312 7240
	37	09 64 422 7240	09 64 412 7240

Number of contacts

9–37

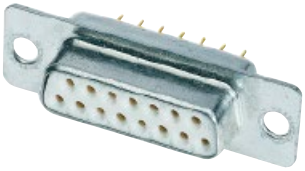

Turned solder pins, straight, through hole

Identification	Drawing	Dimensions in mm

Male connector

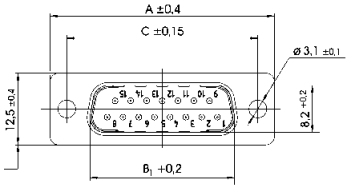

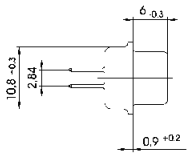

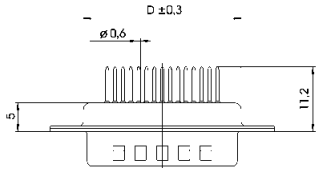

No. of contacts	A	B_1	B_2	C	D	E	F	G
9	30.8	16.9	16.4	25.00	19.3	1.37	2.74	12.50
15	39.1	25.2	24.7	33.30	27.5	1.37	2.74	16.65
25	53.0	38.9	38.5	47.04	41.3	1.40	2.77	23.52
37	69.3	55.3	54.9	63.50	57.7	1.40	2.77	31.75

Female connector

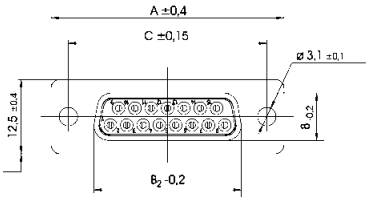

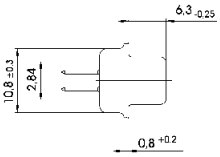

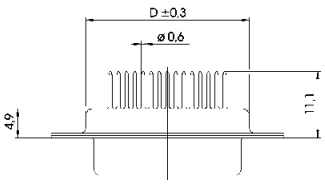

Board drillings

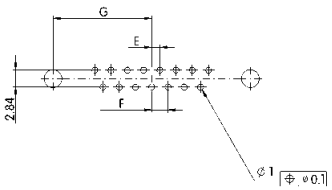

Number of contacts

9–37

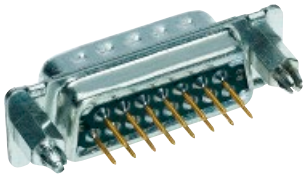

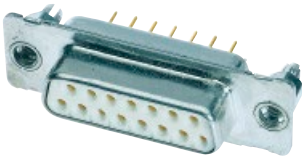

Turned solder pins, straight, straight board clips

Identification	No. of contacts	Part number	
		male connectors	female connectors
Connectors with **47 pF** C filter	9	09 64 122 721 .	09 64 112 721 .
	15	09 64 222 721 .	09 64 212 721 .
	25	09 64 322 721 .	09 64 312 721 .
	37	09 64 422 721 .	09 64 412 721 .
Connectors with **470 pF** C filter	9	09 64 122 722 .	09 64 112 722 .
	15	09 64 222 722 .	09 64 212 722 .
	25	09 64 322 722 .	09 64 312 722 .
	37	09 64 422 722 .	09 64 412 722 .
Connectors with **1000 pF** C filter	9	09 64 122 723 .	09 64 112 723 .
	15	09 64 222 723 .	09 64 212 723 .
	25	09 64 322 723 .	09 64 312 723 .
	37	09 64 422 723 .	09 64 412 723 .
Connectors with **3900 pF** C filter	9	09 64 122 724 .	09 64 112 724 .
	15	09 64 222 724 .	09 64 212 724 .
	25	09 64 322 724 .	09 64 312 724 .
	37	09 64 422 724 .	09 64 412 724 .
Please insert digit for flange thread 4-40 UNC ▶ 5 M3 ▶ 6			

Number of contacts

9–37

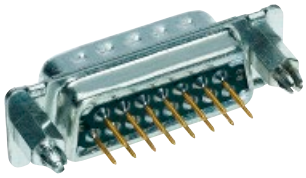

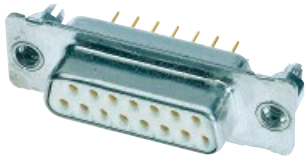

Turned solder pins, straight, straight board clips

Identification	Drawing	Dimensions in mm

Male connector

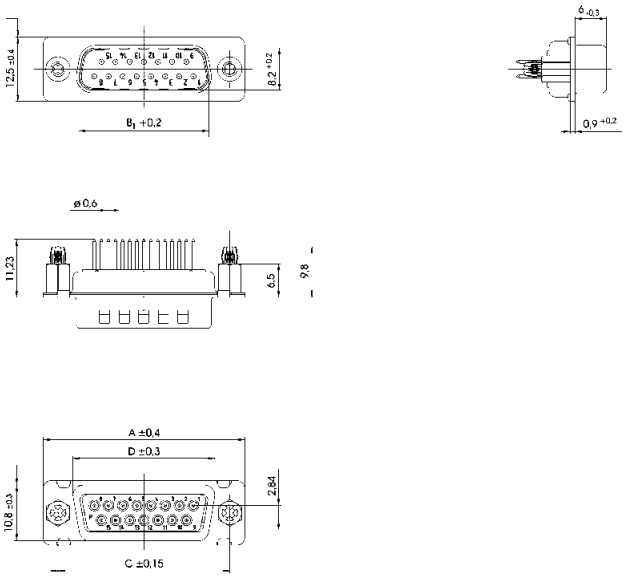

Female connector

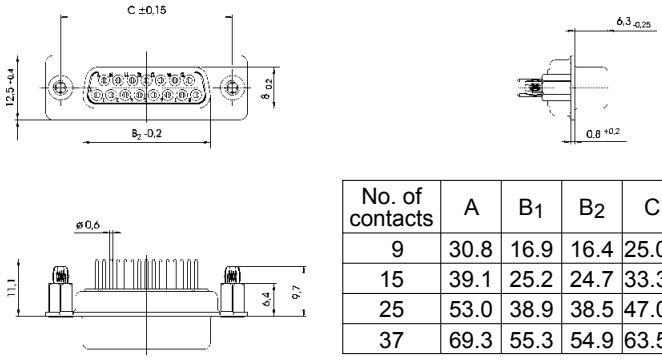

No. of contacts	A	B_1	B_2	C	D	E	F	G
9	30.8	16.9	16.4	25.00	19.3	1.37	2.74	12.50
15	39.1	25.2	24.7	33.30	27.5	1.37	2.74	16.65
25	53.0	38.9	38.5	47.04	41.3	1.40	2.77	23.52
37	69.3	55.3	54.9	63.50	57.7	1.40	2.77	31.75

Board drillings

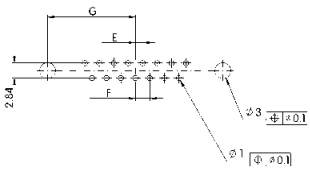

Number of contacts

9–37

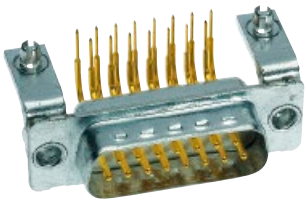
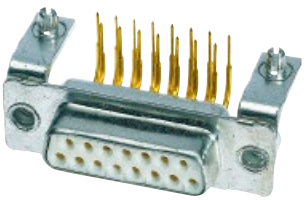

Turned solder pins, right angled, bracket, board lock and clinch nut

Identification	No. of contacts	Part number	
		male connectors	female connectors
Connectors with **47 pF** C filter	9	09 64 124 721 .	09 64 114 721 .
	15	09 64 224 721 .	09 64 214 721 .
	25	09 64 324 721 .	09 64 314 721 .
	37	09 64 424 721 .	09 64 414 721 .
Connectors with **470 pF** C filter	9	09 64 124 722 .	09 64 114 722 .
	15	09 64 224 722 .	09 64 214 722 .
	25	09 64 324 722 .	09 64 314 722 .
	37	09 64 424 722 .	09 64 414 722 .
Connectors with **1000 pF** C filter	9	09 64 124 723 .	09 64 114 723 .
	15	09 64 224 723 .	09 64 214 723 .
	25	09 64 324 723 .	09 64 314 723 .
	37	09 64 424 723 .	09 64 414 723 .
Connectors with **3900 pF** C filter	9	09 64 124 724 .	09 64 114 724 .
	15	09 64 224 724 .	09 64 214 724 .
	25	09 64 324 724 .	09 64 314 724 .
	37	09 64 424 724 .	09 64 414 724 .
Please insert digit for flange thread 4-40 UNC ▶ 2 M3 ▶ 3			

Number of contacts

9–37

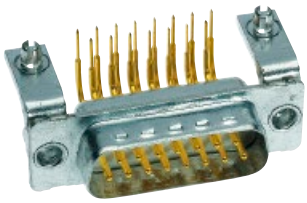
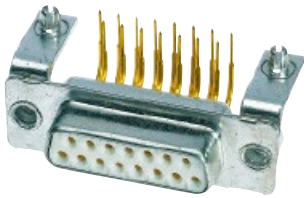

Turned solder pins, right angled, bracket, board lock and clinch nut

Identification	Drawing	Dimensions in mm

Male connector

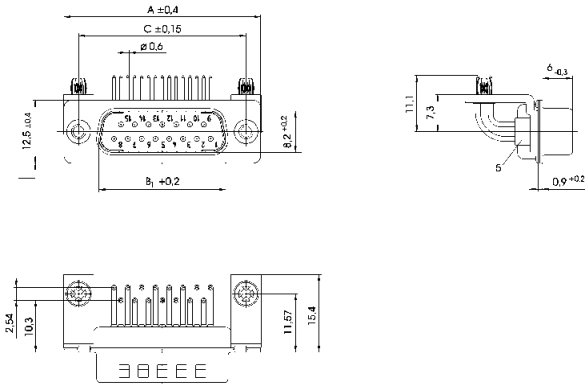

No. of contacts	A	B_1	B_2	C	E	F
9	30.8	16.9	16.4	25.00	1.37	2.74
15	39.1	25.2	24.7	33.30	1.37	2.74
25	53.0	38.9	38.5	47.04	1.40	2.77
37	69.3	55.3	54.9	63.50	1.40	2.77

Female connector

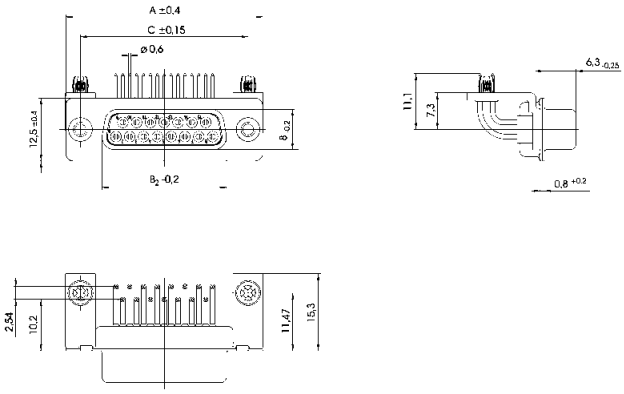

Board drillings

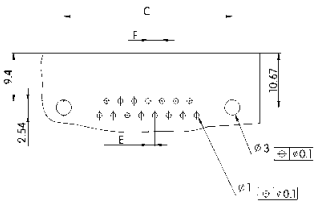

Number of contacts

9–37

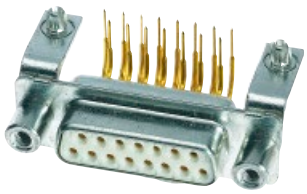

Turned solder pins, right angled, bracket, board lock and female screw

Identification	No. of contacts	Part number	
		male connectors	female connectors
Connectors with **47 pF** C filter	9	09 64 124 721 .	09 64 114 721 .
	15	09 64 224 721 .	09 64 214 721 .
	25	09 64 324 721 .	09 64 314 721 .
	37	09 64 424 721 .	09 64 414 721 .
Connectors with **470 pF** C filter	9	09 64 124 722 .	09 64 114 722 .
	15	09 64 224 722 .	09 64 214 722 .
	25	09 64 324 722 .	09 64 314 722 .
	37	09 64 424 722 .	09 64 414 722 .
Connectors with **1000 pF** C filter	9	09 64 124 723 .	09 64 114 723 .
	15	09 64 224 723 .	09 64 214 723 .
	25	09 64 324 723 .	09 64 314 723 .
	37	09 64 424 723 .	09 64 414 723 .
Connectors with **3900 pF** C filter	9	09 64 124 724 .	09 64 114 724 .
	15	09 64 224 724 .	09 64 214 724 .
	25	09 64 324 724 .	09 64 314 724 .
	37	09 64 424 724 .	09 64 414 724 .
Please insert digit for flange thread 4-40 UNC ▶ 4 M3 ▶ 5			

Number of contacts

9–37

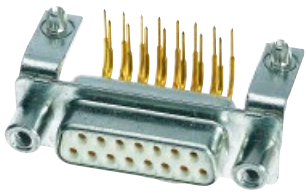

Turned solder pins, right angled, bracket, board lock and female screw

Identification	Drawing	Dimensions in mm

Male connector

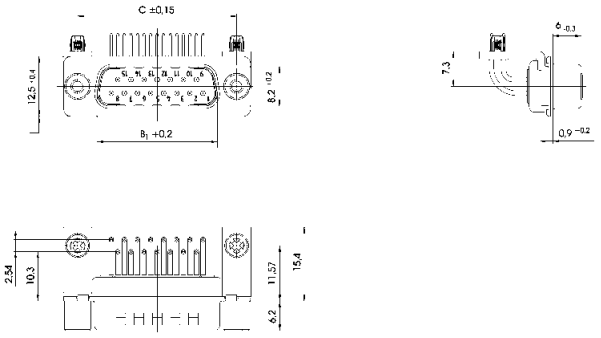

No. of contacts	A	B_1	B_2	C	E	F
9	30.8	16.9	16.4	25.00	1.37	2.74
15	39.1	25.2	24.7	33.30	1.37	2.74
25	53.0	38.9	38.5	47.04	1.40	2.77
37	69.3	55.3	54.9	63.50	1.40	2.77

Female connector

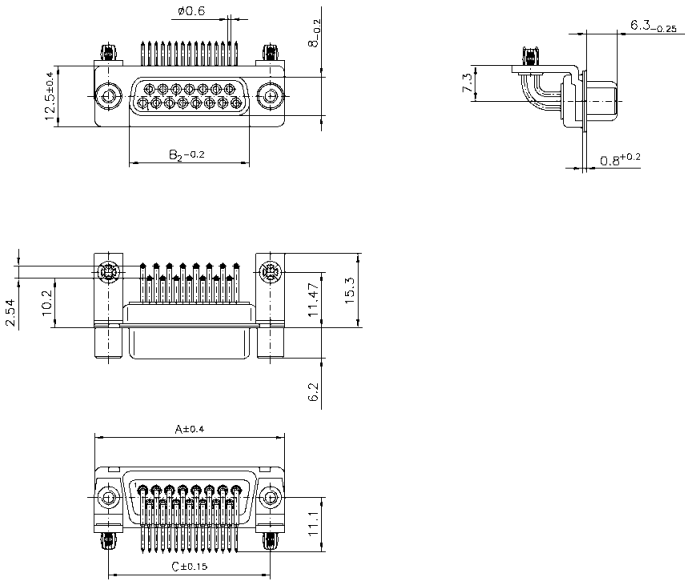

Board drillings

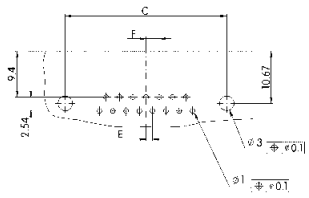

Number of contacts

9–37

Solder buckets, through hole

Identification	No. of contacts	Part number	
		male connectors	female connectors
Connectors with **47 pF** C filter	9	09 64 121 7210	09 64 111 7210
	15	09 64 221 7210	09 64 211 7210
	25	09 64 321 7210	09 64 311 7210
	37	09 64 421 7210	09 64 411 7210
Connectors with **470 pF** C filter	9	09 64 121 7220	09 64 111 7220
	15	09 64 221 7220	09 64 211 7220
	25	09 64 321 7220	09 64 311 7220
	37	09 64 421 7220	09 64 411 7220
Connectors with **1000 pF** C filter	9	09 64 121 7230	09 64 111 7230
	15	09 64 221 7230	09 64 211 7230
	25	09 64 321 7230	09 64 311 7230
	37	09 64 421 7230	09 64 411 7230
Connectors with **3900 pF** C filter	9	09 64 121 7240	09 64 111 7240
	15	09 64 221 7240	09 64 211 7240
	25	09 64 321 7240	09 64 311 7240
	37	09 64 421 7240	09 64 411 7240

Number of contacts

9–37

Solder buckets, through hole

Identification	Drawing	Dimensions in mm

Male connector

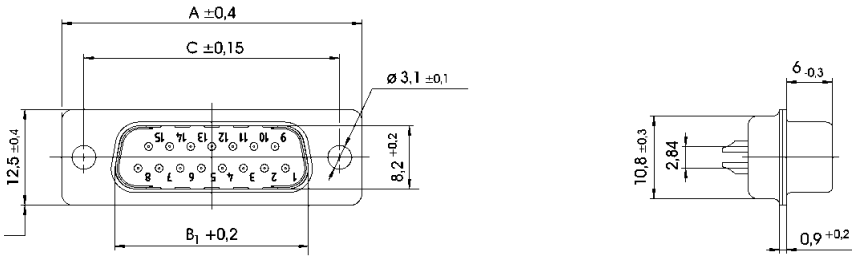

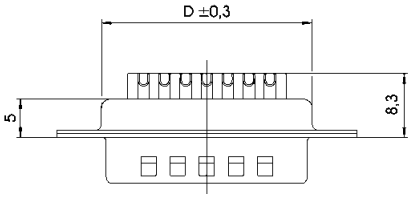

No. of contacts	A	B_1	B_2	C	D
9	30.8	16.9	16.4	25.00	19.3
15	39.1	25.2	24.7	33.30	27.5
25	53.0	38.9	38.5	47.04	41.3
37	69.3	55.3	54.9	63.50	57.7

Female connector

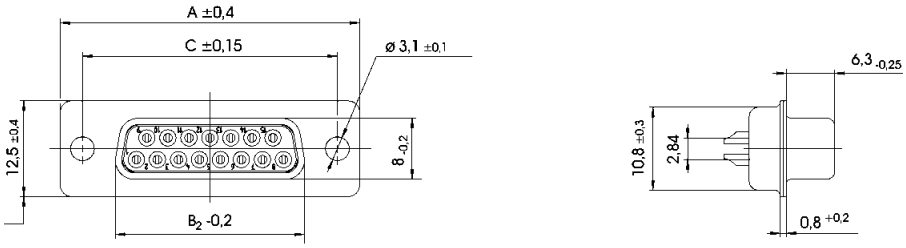

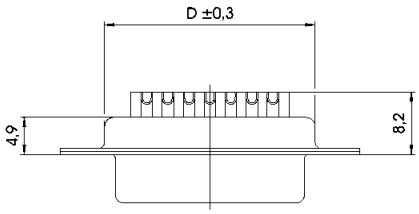

Panel cut outs see page 05.110

Number of contacts

9–37

Solder buckets, clinch nut

Identification	No. of contacts	Part number	
		male connectors	female connectors
Connectors with **47 pF** C filter	9	09 64 121 721 .	09 64 111 721 .
	15	09 64 221 721 .	09 64 211 721 .
	25	09 64 321 721 .	09 64 311 721 .
	37	09 64 421 721 .	09 64 411 721 .
Connectors with **470 pF** C filter	9	09 64 121 722 .	09 64 111 722 .
	15	09 64 221 722 .	09 64 211 722 .
	25	09 64 321 722 .	09 64 311 722 .
	37	09 64 421 722 .	09 64 411 722 .
Connectors with **1000 pF** C filter	9	09 64 121 723 .	09 64 111 723 .
	15	09 64 221 723 .	09 64 211 723 .
	25	09 64 321 723 .	09 64 311 723 .
	37	09 64 421 723 .	09 64 411 723 .
Connectors with **3900 pF** C filter	9	09 64 121 724 .	09 64 111 724 .
	15	09 64 221 724 .	09 64 211 724 .
	25	09 64 321 724 .	09 64 311 724 .
	37	09 64 421 724 .	09 64 411 724 .
Please insert digit for flange thread 4-40 UNC ▶ 7 M3 ▶ 8			

Number of contacts

9–37

Solder buckets, clinch nut

Identification	Drawing	Dimensions in mm

Male connector

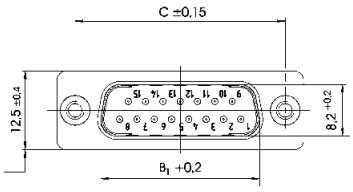

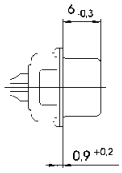

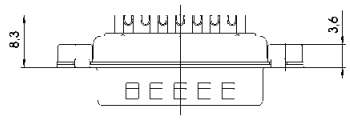

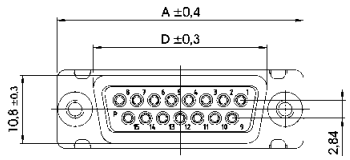

No. of contacts	A	B_1	B_2	C	D
9	30.8	16.9	16.4	25.00	19.3
15	39.1	25.2	24.7	33.30	27.5
25	53.0	38.9	38.5	47.04	41.3
37	69.3	55.3	54.9	63.50	57.7

Female connector

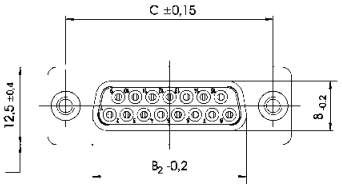

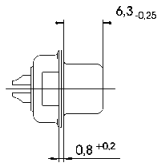

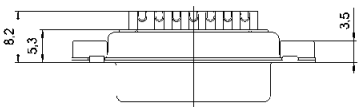

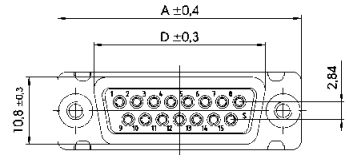

Panel cut outs see page 05.110

Panel cut outs / panel mountings

Panel cut outs

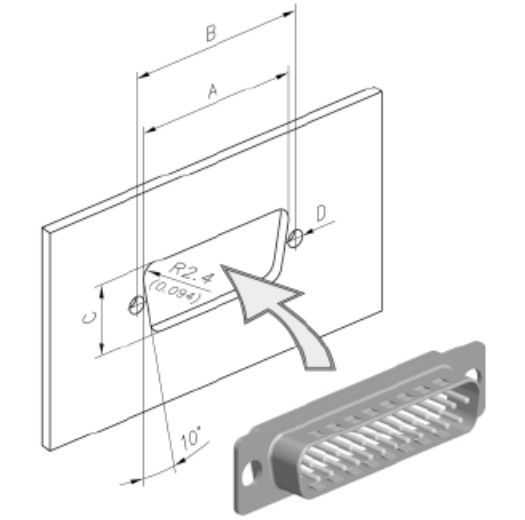

Front mounting

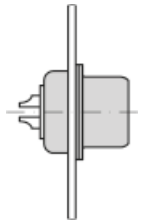

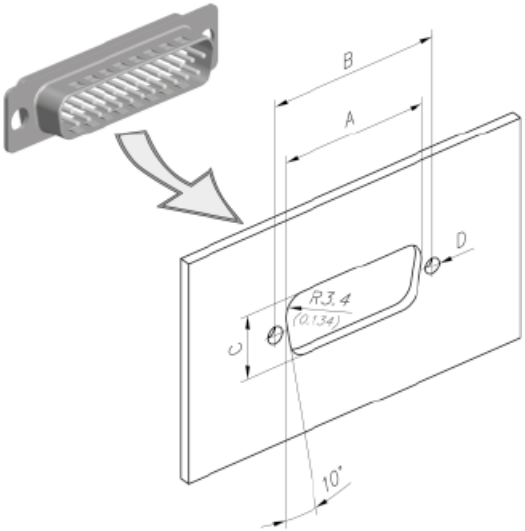

Rear mounting

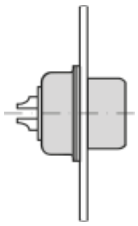

No. of contacts	Mounting assembly	A ± 0.2	B ± 0.2	C ± 0.2
9	Front	22.2	25.0	12.3
	Rear	20.5	25.0	11.4
15	Front	30.5	33.3	12.3
	Rear	28.8	33.3	11.4
25	Front	44.3	47.0	12.3
	Rear	42.5	47.0	11.4
37	Front	60.7	63.5	12.3
	Rear	59.1	63.5	11.4

Panel mountings

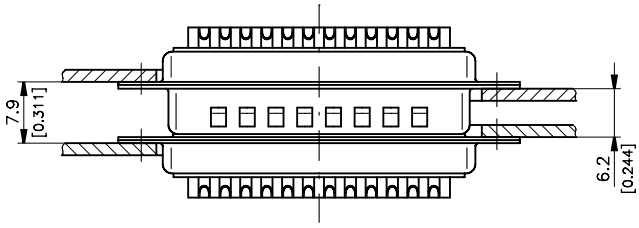

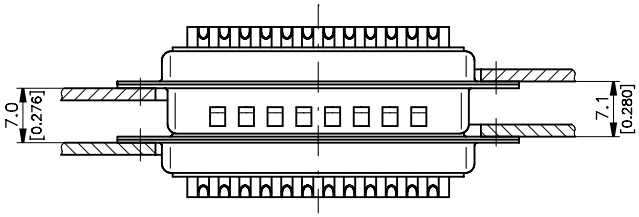

For float mounting option please contact your local HARTING representative.

Dimensions in mm

General information

With the innovative EMC platform approach, this enables customers to select their optimum filter requirements, contact per contact. Allowing not only to segregate the filtering per contact but also to mix the type of filter used. This is then cast in a single competitive product (in a standard D-Sub shell).

The biggest advantage of the HARTING technology is that multiple filter assemblies can be configured to create different filter designs: C, Pi, L and T types. Since any value of capacitor can be placed on any contact, a wide range of configurations can be built, it is even possible to have an individual pin unfiltered if necessary.

Furthermore, ***Pi filters can be supplied in a standard connector size shell***. In addition, protection against lightening and transient voltage can be included upon request.

In the next few pages, you will find all the necessary information plus a selection guide to help you to choose your appropriate solution.

or

+

- C filter
- L filter
- Pi filter
- ESD protection
- Lightening protection
- Combination

With any capacitance on any pin in **a standard D-Sub shell**.

All types of filter mixed D-Sub are also available on request.

General information

Filter possibilities

C filter:

Non exhaustive list of C filter values that HARTING can supply (for specials see page 05.114 ff)

C filter capacitance in pF	Minimum insertion loss								Max. working voltage	Max. dielectric withstanding
	Attenuation [dB] vs frequency [MHz]									
	0.1	1	5	10	50	100	500	1000		
47							30	35	500 V DC	750 V DC
100					1	3	40	35	500 V DC	750 V DC
150					1	6	45	35	500 V DC	750 V DC
180					1	10	40	32	500 V DC	750 V DC
270				1	3	12	35	32	500 V DC	750 V DC
330				1	7	13	35	32	500 V DC	750 V DC
470				1	10	15	35	32	500 V DC	750 V DC
820				2	10	18	30	30	500 V DC	750 V DC
1000			1	3	12	20	34	30	500 V DC	750 V DC
1800			2	6	17	30	35	32	500 V DC	750 V DC
3900		1	6	11	25	35	35	32	500 V DC	750 V DC
4700		1	9	13	30	38	35	32	500 V DC	750 V DC
5600		2	10	14	30	32	32	32	500 V DC	750 V DC
10000		1	10	15	30	32	30	30	200 V DC	500 V DC
33000	1	9	19	29	32	34	39	32	100 V DC	150 V DC
47000	1	11	23	30	32	32	35	32	100 V DC	150 V DC
100000	2	18	32	40	34	34	36	35	25 V DC	40 V DC

Pi filter:

Non exhaustive list of Pi filter values that HARTING can supply (for specials see page 05.114 ff)

Pi filter capacitance in pF	Minimum insertion loss								Max. working voltage	Max. dielectric withstanding
	Attenuation [dB] vs frequency [MHz]									
	0.1	1	5	10	50	100	500	1000		
94						2	35	50	200 V DC	500 V DC
200					1	8	50	40	200 V DC	500 V DC
440				1	8	16	50	40	200 V DC	500 V DC
940				2	12	24	50	40	200 V DC	500 V DC
2000			2	7	17	40	45	40	200 V DC	500 V DC
4400			5	10	28	60	45	40	200 V DC	500 V DC
9400		2	10	15	48	50	45	40	200 V DC	500 V DC
20000		5	14	20	50	60	52	48	100 V DC	250 V DC
94000	2	15	32	50	51	52	48	42	50 V DC	125 V DC
200000	7	21	48	65	55	52	48	42	16 V DC	25 V DC

General information

Other protection possibilities

ESD protection

(Electro Static Discharge protection)

For equipment to comply with:

- IEC-1000-4-2; levels 1 to 4 (Contact discharge test)
- RTCA-160 D; section 25

Typical parasitic capacitance (pF)	Max. clamp voltage (V)	Working voltage (V)
0.5 V_{rms} @ 1 KHz	@ I = 1 A @ 8/20 µS	@ I = 10 µA
1750	7.5	3
1250	13	5
650	22	12
430	33	18
220	48	26
200	51	30

EMP protection

(Electro Magnetic Pulse protection)

For equipment to comply with:

- MIL-STD-461 C: requirements CS 06, CS 10, CS 11, RS 05
- IEC-1000-4-4; EFT TESTS
- RTCA-160 D; section 17

Typical parasitic capacitance (pF)	Max. clamp voltage (V)	Working voltage (V)
0.5 V_{rms} @ 1 KHz	@ I = 10 A @ 8/20 µS	@ I = 10 µA
5675	9	3
3620	15	5
1500	26	14
820	34	18
275	50	26

Lightening protection

For equipment to comply with:

- IEC-1000-4-5; levels 1 and 2 (1.2 µ / 50 µS)
- RTCA-160 D; section 22 (pin injection, level 1)

Typical parasitic capacitance (pF)	Max. clamp voltage (V)	Working voltage (V)
0.5 V_{rms} @ 1 KHz	@ I = 30 A @ 8/20 µS	@ I = 10 µA
5500	12	3
3175	18	5
2000	21	9
1680	30	14
900	38	18
720	60	26
600	63	30

HARTING customer request form

Our innovative technology offers all the possibilities you may need.

For customer solutions, please contact your local HARTING representative.

Here is a summary of the information we need to develop a customer solution:

Connector

Standard D-Sub	Gender	☐ Male		☐ Female		
	No. of contacts	☐ 9	☐ 15	☐ 25	☐ 37	☐ 50
	Termination	☐ Solder bucket		☐ Straight pcb		
		☐ R/A Eur, 2.54 mm		☐ R/A US, 2.84 mm		
Mixed D-Sub	Gender	☐ Male		☐ Female		
	Contact arrangement	☐ 3W3	☐ 3W3C	☐ Other _____		
	Power contact rating	☐ 10 A	☐ 20 A	☐ 30 A	☐ 40 A	
	Termination	☐ Solder bucket		☐ Straight pcb		
		☐ R/A pcb (please specify the board drillings)				

Flange thread and board locking options

Right angled version

☐ Through hole

☐ Clinch nut 4-40 UNC

☐ Clinch nut M3

☐ Bracket

☐ Board lock

☐ Female screw lock 4-40 UNC

☐ Female screw lock M3

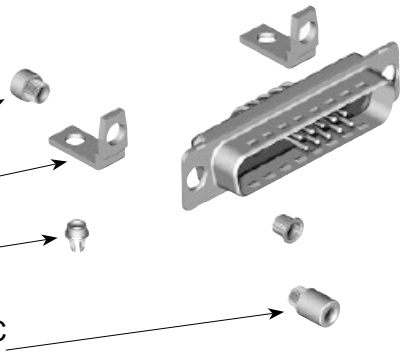

Straight version

☐ Through hole

☐ Clinch nut 4-40 UNC

☐ Clinch nut M3

☐ Spacer 4-40 UNC

☐ Spacer M3

☐ Female screw lock 4-40 UNC

☐ Spacer 4-40 UNC + board lock

☐ Spacer M3 + board lock

Spacer + board lock and female screw lock

☐ M3 ☐ 4-40 UNC

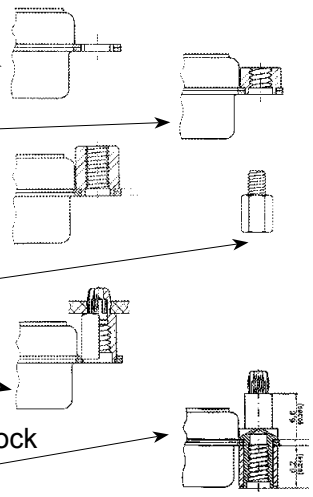

HARTING customer request from

Filter

What working voltage is used? _____

What is the maximum dielectric withstanding voltage needed? _____

Type of filter _____ (C filter, Pi filter*, L filter …)

Capacitance _____

Are there other protections needed? ☐ No ☐ Yes ☐ ESD ☐ Transient ☐ EMP ☐ Lightening

If a pin-to-pin selection has to be done, please state the details Pin 1: ?, Pin 2: ?, …

_____

Name: _____

Company: _____

Address: _____

_____

Phone: _____

Fax: _____

E-Mail: _____

Drawing: ☐ no ☐ yes

Samples: ☐ no ☐ yes, quantity

Volume (pcs./year): _____

Special requirements: _____

* only available for male connectors

Number of contacts	9, 15, 25, 37, 50 UL recognized
Working current	5 A
Test voltage between 2 contacts / contact and shell	1200 V for 1 minute
Clearance and creepage	≥ 1.0 mm
Contact resistance	
Straight contact	≤ 10 mΩ
Angled contact	≤ 25 mΩ
Angled contact 50-pole	≤ 35 mΩ
Insulation resistance	
between contacts	≥ 5000 MΩ
Dielectric strength	50 kV/mm
Temperature range	-25 °C … +70 °C
Protection	IP67 (per DIN 40 050 / IEC 529)
Termination	
Solder cup	max. AWG 20
Solder pin straight	0.6 mm diameter
Solder pin angled	0.6 mm diameter
Material	
Shell	Brass, tin plated
Insulator and plastic watertight frame	Thermoplastic, glass-fibre filled, UL 94-V0
Metal watertight frame	Nickel plated zinc die cast
Contact material	Machined copper alloy
Contact surface	
Contact zone	S4 = 0.76 µm (30 µinch) Au or PdNi equivalent
Waterproofing element	Silicone
Mechanical	
Mating cycles	≥ 500
Mating force per signal contact	≤ 3.4 N
Unmating force per signal contact	≥ 0.2 N

Contact arrangement View from termination side

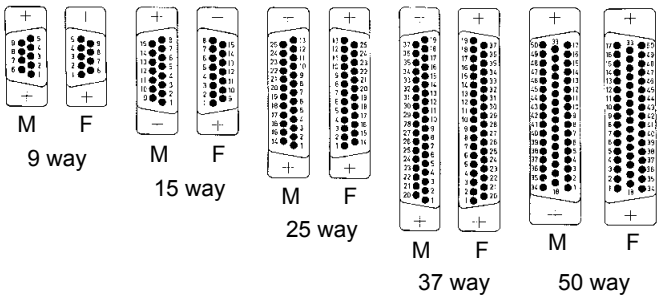

M = Male connector
F = Female connector

Mating conditions as per DIN 41 652

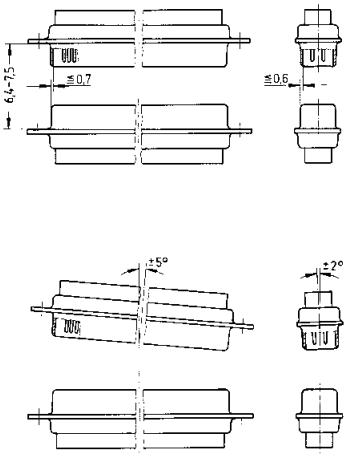

Notes

Number of contacts

9–50

IP67, turned solder cups

Identification	No. of contacts	Part number
		S4[1]
Male connector metal shell with dimples		
	9	09 67 409 5615
	15	09 67 415 5615
	25	09 67 425 5615
	37	09 67 437 5615
	50	09 67 450 5615
Female connector metal shell		
	9	09 67 409 4715
	15	09 67 415 4715
	25	09 67 425 4715
	37	09 67 437 4715
	50	09 67 450 4715

[1] S4 = 0.76 µm (30 µinch) Au or PdNi eqivalent

Number of contacts

9–50

IP67, turned solder cups

Identification	Drawing	Dimensions in mm

Male connector
9 – 50 contacts

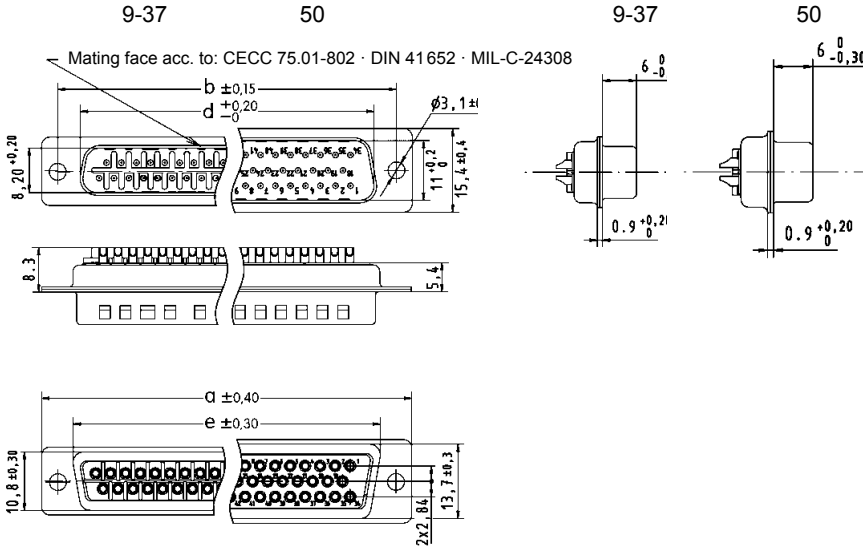

Female connector
9 – 50 contacts

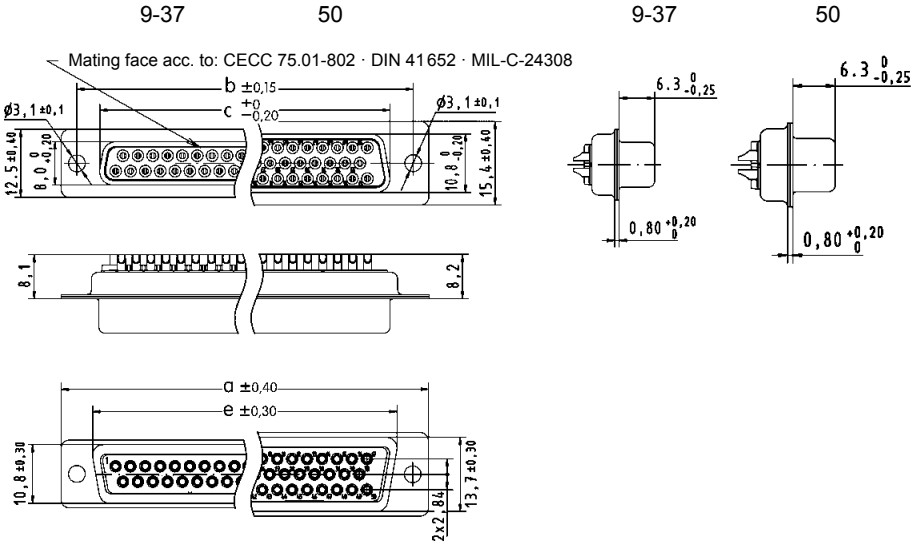

	a	b	c	d	e
9	30.8	25.00	16.4	16.9	19.3
15	39.1	33.30	24.7	25.2	27.5
25	53.0	47.04	38.5	38.9	41.3
37	69.3	63.50	54.9	55.3	57.7
50	66.9	61.10	52.5	52.8	55.3

Number of contacts

9–25

IP67, turned solder cups, with rear plastic mounting plate

Identification	No. of contacts	Part number
		S4[1]
Male connector metal shell with dimples		
	9	09 67 509 . 615
	15	09 67 515 . 615
	25	09 67 525 . 615
Please insert digit for flange thread		
4-40 UNC ▶ 7		
M3 ▶ 9		
Female connector metal shell		
	9	09 67 509 . 715
	15	09 67 515 . 715
	25	09 67 525 . 715
Please insert digit for flange thread		
4-40 UNC ▶ 6		
M3 ▶ 8		

[1] S4 = 0.76 µm (30 µinch) Au or PdNi eqivalent

Number of contacts

9–25

IP67, turned solder cups, with rear plastic mounting plate

Identification	Drawing	Dimensions in mm

Male connector
9 – 25 contacts

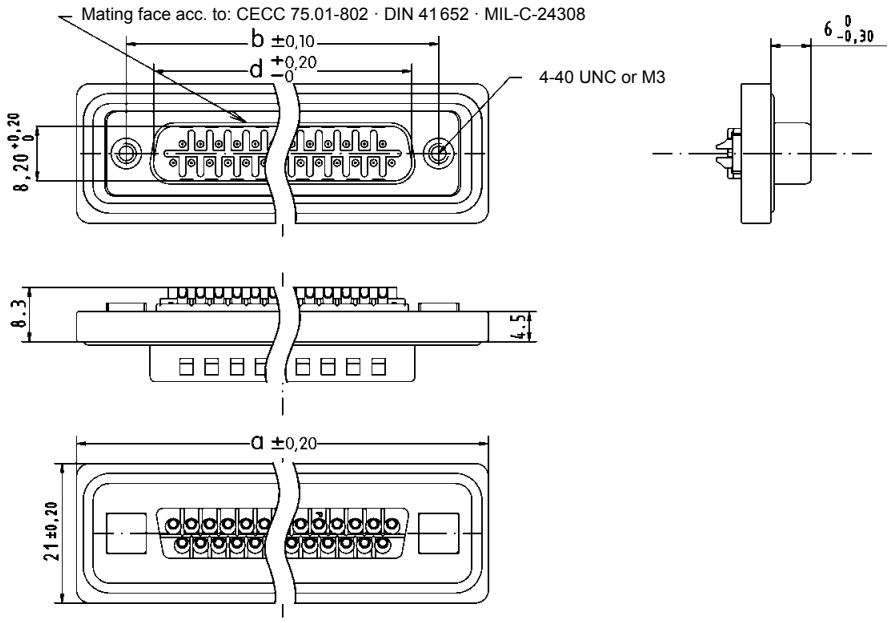

Female connector
9 – 25 contacts

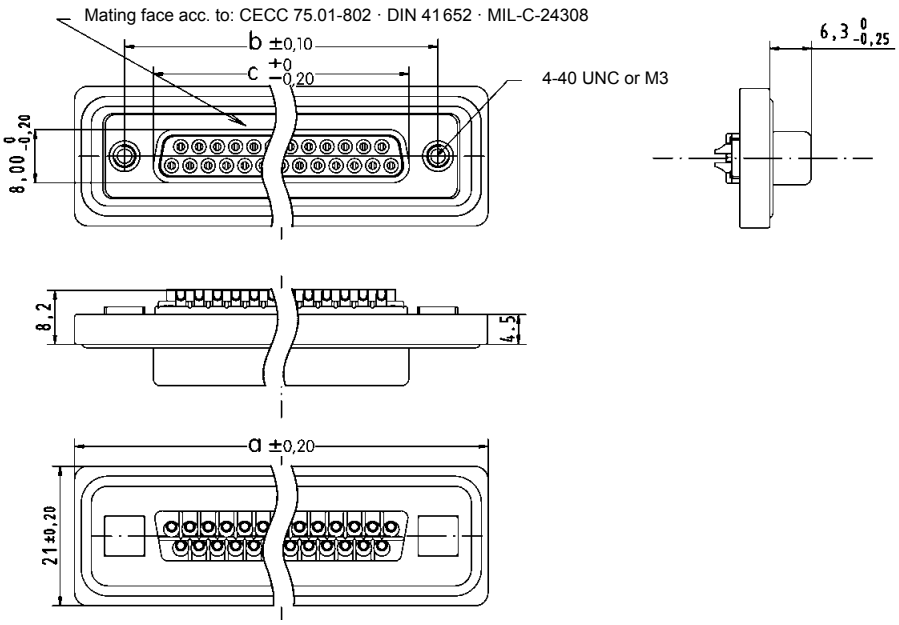

	a	b	c	d
9	40.0	25.00	16.4	16.9
15	48.3	33.30	24.7	25.2
25	62.0	47.04	38.5	38.9

Number of contacts

9–25

IP67, turned solder cups, with front plastic mounting plate

Identification	No. of contacts	Part number
		S4[1]
Male connector metal shell with dimples		
	9	09 67 709 . 615
	15	09 67 715 . 615
	25	09 67 725 . 615
Please insert digit for flange thread		
4-40 UNC ▶ 7		
M3 ▶ 9		
Female connector metal shell		
	9	09 67 709 . 715
	15	09 67 715 . 715
	25	09 67 725 . 715
Please insert digit for flange thread		
4-40 UNC ▶ 6		
M3 ▶ 8		

[1] S4 = 0.76 µm (30 µinch) Au or PdNi eqivalent

Number of contacts

9–25

IP67, turned solder cups, with front plastic mounting plate

Identification	Drawing	Dimensions in mm

Male connector
9 – 25 contacts

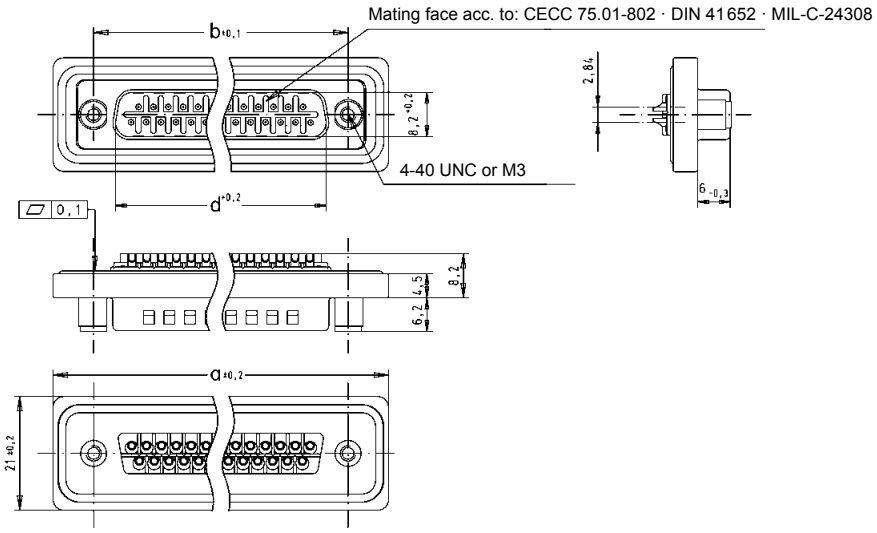

Female connector
9 – 25 contacts

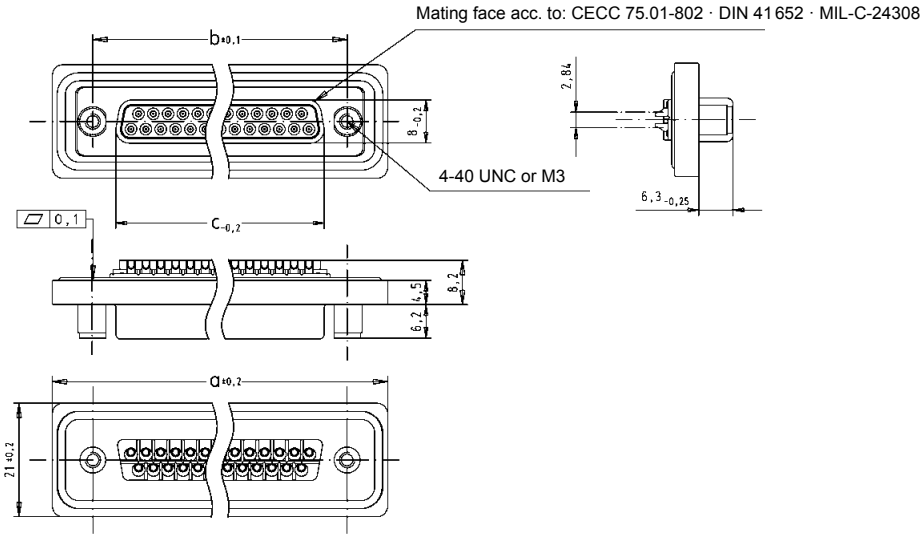

	a	b	c	d
9	40.0	25.00	16.4	16.9
15	48.3	33.30	24.7	25.2
25	62.0	47.04	38.5	38.9

Panel cut out for front/rear mount
Values are taken from the CECC 75301-802

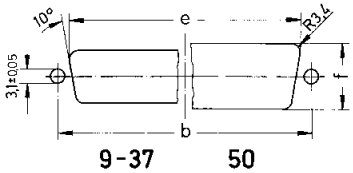

Front mount

	$b_{\pm 0.13}$	$e_{\pm 0.2}$	$f_{\pm 0.2}$
9	25.0	22.2	12.3
15	33.3	30.5	12.3
25	47.0	44.3	12.3

Rear mount

	$b_{\pm 0.13}$	$e_{\pm 0.2}$	$f_{\pm 0.2}$
9	25.0	20.5	11.4
15	33.3	28.8	11.4
25	47.0	42.5	11.4

Number of contacts

9–50

IP67, turned solder cups, with rear metal mounting plate

Identification	No. of contacts	Part number
		S4[1]
Male connector metal shell with dimples		
	9	09 67 609 . 615
	15	09 67 615 . 615
	25	09 67 625 . 615
	37	09 67 637 . 615
	50	09 67 650 . 615
Please insert digit for flange thread		
4-40 UNC ▶ 7		
M3 ▶ 9		
Female connector metal shell		
	9	09 67 609 . 715
	15	09 67 615 . 715
	25	09 67 625 . 715
	37	09 67 637 . 715
	50	09 67 650 . 715
Please insert digit for flange thread		
4-40 UNC ▶ 6		
M3 ▶ 8		

[1] S4 = 0.76 µm (30 µinch) Au or PdNi eqivalent

Number of contacts

9–50

IP67, turned solder cups, with rear metal mounting plate

Identification	Drawing	Dimensions in mm

Male connector
9 – 50 contacts

9-37 50 9-37 50

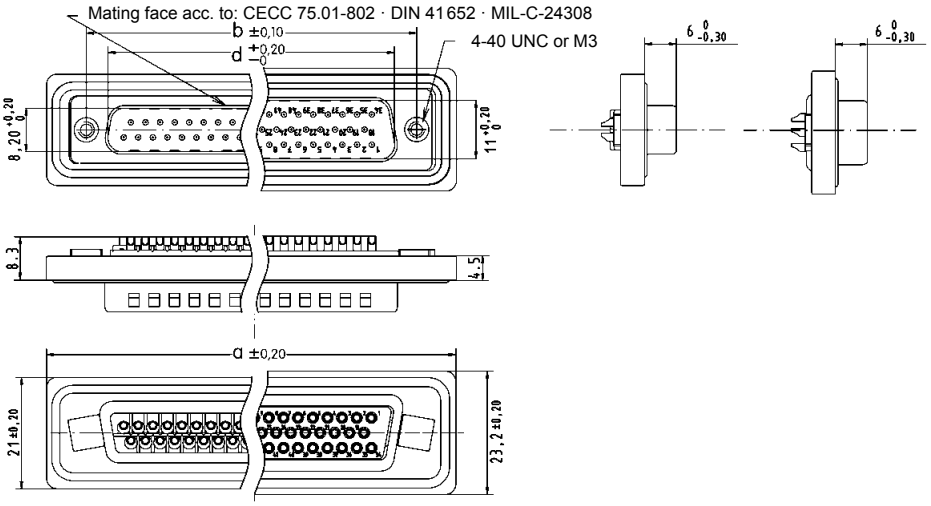

Female connector
9 – 50 contacts

9-37 50 9-37 50

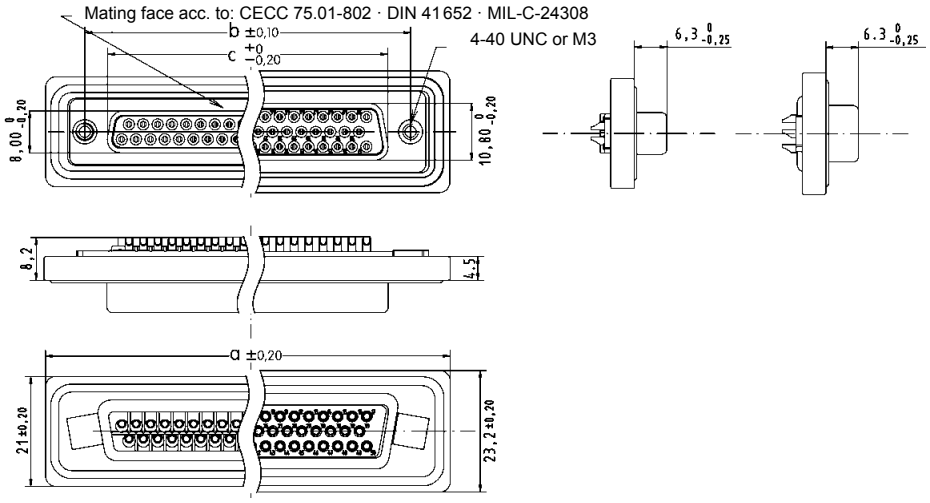

	a	b	c	d
9	40,0	25,00	16,4	16,9
15	48,3	33,30	24,7	25,2
25	62,0	47,04	38,5	38,9
37	78,5	63,50	54,9	55,3
50	76,1	61,10	52,5	52,8

Number of contacts

9–50

IP67, turned solder cups, with front metal mounting plate

Identification	No. of contacts	Part number
		S4[1]
Male connector metal shell with dimples		
	9	09 67 809 . 615
	15	09 67 815 . 615
	25	09 67 825 . 615
	37	09 67 837 . 615
	50	09 67 850 . 615
Please insert digit for flange thread		
4-40 UNC ▶ 7		
M3 ▶ 9		
Female connector metal shell		
	9	09 67 809 . 715
	15	09 67 815 . 715
	25	09 67 825 . 715
	37	09 67 837 . 715
	50	09 67 850 . 715
Please insert digit for flange thread		
4-40 UNC ▶ 6		
M3 ▶ 8		

[1] S4 = 0.76 µm (30 µinch) Au or PdNi eqivalent

Number of contacts

9–50

IP67, turned solder cups, with front metal mounting plate

Identification	Drawing	Dimensions in mm

Male connector
9 – 50 contacts

9-37 50 9-37 50

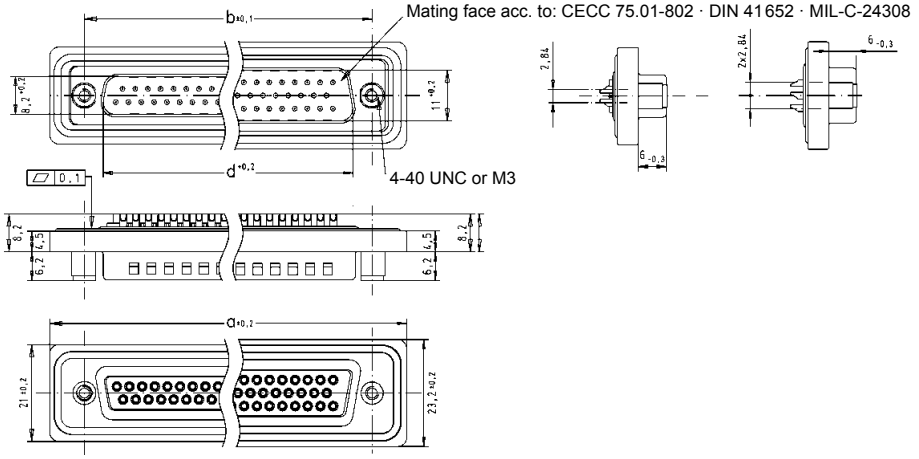

Female connector
9 – 50 contacts

9-37 50 9-37 50

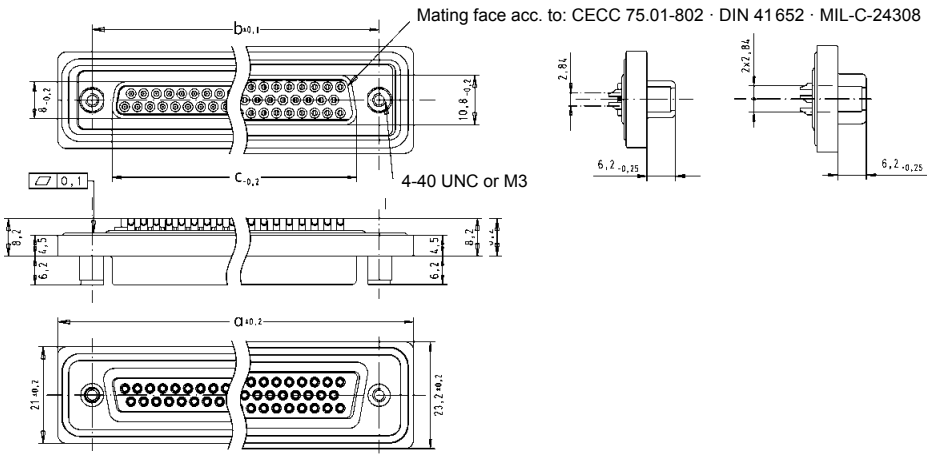

	a	b	c	d
9	40.0	25.00	16.4	16.9
15	48.3	33.30	24.7	25.2
25	62.0	47.04	38.5	38.9
37	78.5	63.50	54.9	55.3
50	76.1	61.10	51.3	52.8

Panel cut out for front/rear mount
Values are taken from the CECC 75301-802

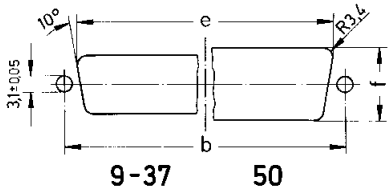

Front mount

	$b_{\pm 0.13}$	$e_{\pm 0.2}$	$f_{\pm 0.2}$
9	25.0	22.2	12.3
15	33.3	30.5	12.3
25	47.0	44.3	12.3
37	63.5	60.7	12.3
50	61.1	58.3	15.1

Rear mount

	$b_{\pm 0.13}$	$e_{\pm 0.2}$	$f_{\pm 0.2}$
9	25.0	20.5	11.4
15	33.3	28.8	11.4
25	47.0	42.5	11.4
37	63.5	59.1	11.4
50	61.1	56.3	14.1

Number of contacts

9–25

IP67, straight turned solder pins, with rear plastic mounting plate, spacer and board lock

Identification	No. of contacts	Part number
		S4[1]
Male connector metal shell with dimples		
	9	09 67 509 . 675
	15	09 67 515 . 675
	25	09 67 525 . 675
Please insert digit for flange thread		
4-40 UNC ▶ 7		
M3 ▶ 9		
Female connector metal shell		
	9	09 67 509 . 775
	15	09 67 515 . 775
	25	09 67 525 . 775
Please insert digit for flange thread		
4-40 UNC ▶ 6		
M3 ▶ 8		

[1] S4 = 0.76 µm (30 µinch) Au or PdNi eqivalent

Number of contacts

9–25

IP67, straight turned solder pins,
with rear plastic mounting plate, spacer and board lock

Identification	Drawing	Dimensions in mm

Male connector
9 – 25 contacts

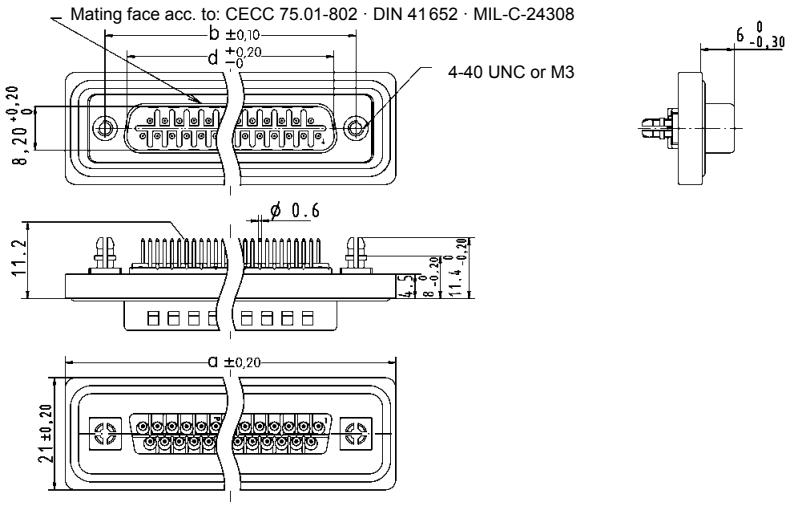

Female connector
9 – 25 contacts

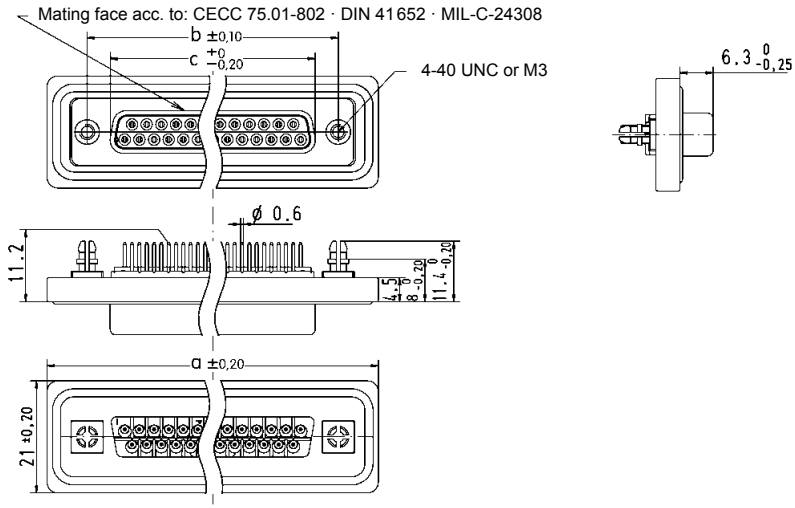

	a	b	c	d	g	h	i
9	40.0	25.00	16.4	16.9	4 x 2.74 = 10.96	3 x 2.74 = 8.22	25.0
15	48.3	33.30	24.7	25.2	7 x 2.74 = 19.18	6 x 2.74 = 16.44	33.3
25	62.0	47.04	38.5	38.9	12 x 2.76 = 33.12	11 x 2.76 = 30.36	47.0

Board drillings

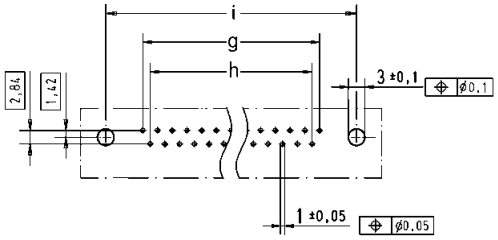

Number of contacts

9–50

IP67, straight turned solder pins, with rear metal mounting plate, spacer and board lock

Identification	No. of contacts	Part number
		S4[1]
Male connector metal shell with dimples		
	9	09 67 609 . 675
	15	09 67 615 . 675
	25	09 67 625 . 675
	37	09 67 637 . 675
	50	09 67 650 . 675
Please insert digit for flange thread		
4-40 UNC ▶ 7		
M3 ▶ 9		
Female connector metal shell		
	9	09 67 609 . 775
	15	09 67 615 . 775
	25	09 67 625 . 775
	37	09 67 637 . 775
	50	09 67 650 . 775
Please insert digit for flange thread		
4-40 UNC ▶ 6		
M3 ▶ 8		

[1] S4 = 0.76 µm (30 µinch) Au or PdNi eqivalent

Number of contacts

9–50

IP67, straight turned solder pins,
with rear metal mounting plate, spacer and board lock

Identification	Drawing	Dimensions in mm

Male connector
9 – 50 contacts

9-37 50

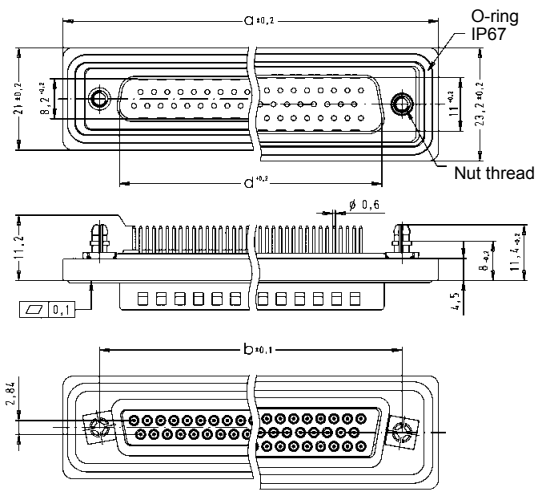

9-37 50

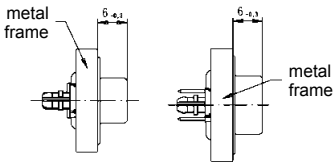

Female connector
9 – 50 contacts

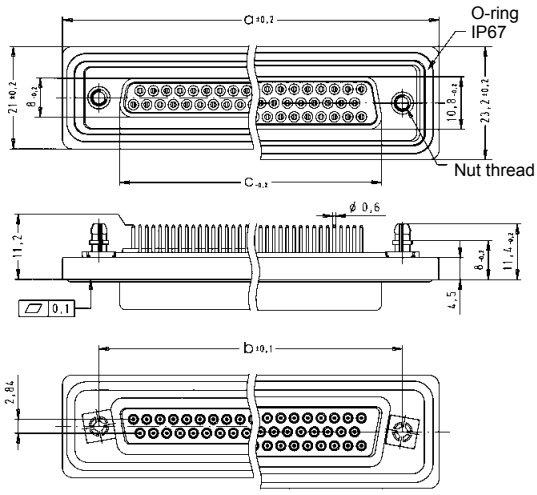

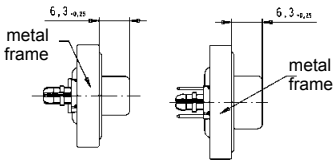

	a	b	c	d	g	h
9	40.0	25.00	16.4	16.9	4 x 2.74 = 10.96	3 x 2.74 = 8.22
15	48.3	33.30	24.7	25.2	7 x 2.74 = 19.18	6 x 2.74 = 16.44
25	62.0	47.04	38.5	38.9	12 x 2.76 = 33.12	11 x 2.76 = 30.36
37	78.5	63.50	54.9	55.3	18 x 2.76 = 49.68	17 x 2.76 = 46.92
50	76.1	61.10	52.5	52.8	16 x 2.76 = 44.16	15 x 2.76 = 41.40

Board drillings

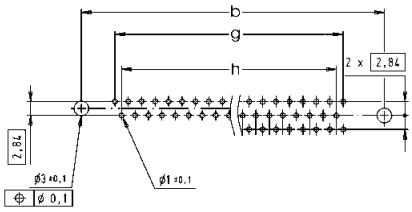

Number of contacts

9–25

IP67, angled turned solder pins,
with rear plastic mounting plate, bracket and board lock

Identification	No. of contacts	Part number
		S4[1]
Male connector metal shell with dimples		
	9	09 67 509 . 658
	15	09 67 515 . 658
	25	09 67 525 . 658
Please insert digit for flange thread		
4-40 UNC ▶ 7		
M3 ▶ 9		
Female connector metal shell		
	9	09 67 509 . 758
	15	09 67 515 . 758
	25	09 67 525 . 758
Please insert digit for flange thread		
4-40 UNC ▶ 6		
M3 ▶ 8		

[1] S4 = 0.76 µm (30 µinch) Au or PdNi eqivalent

Number of contacts

9–25

IP67, angled turned solder pins,
with rear plastic mounting plate, bracket and board lock

Identification	Drawing	Dimensions in mm

Male connector
9 – 25 contacts

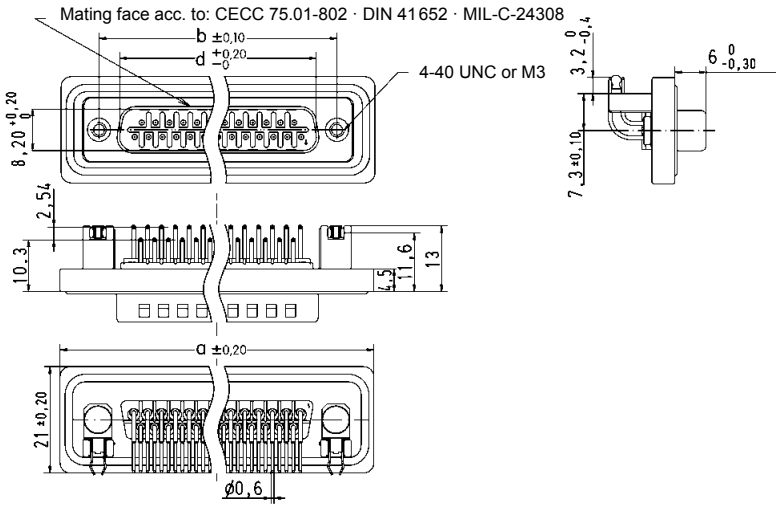

Female connector
9 – 25 contacts

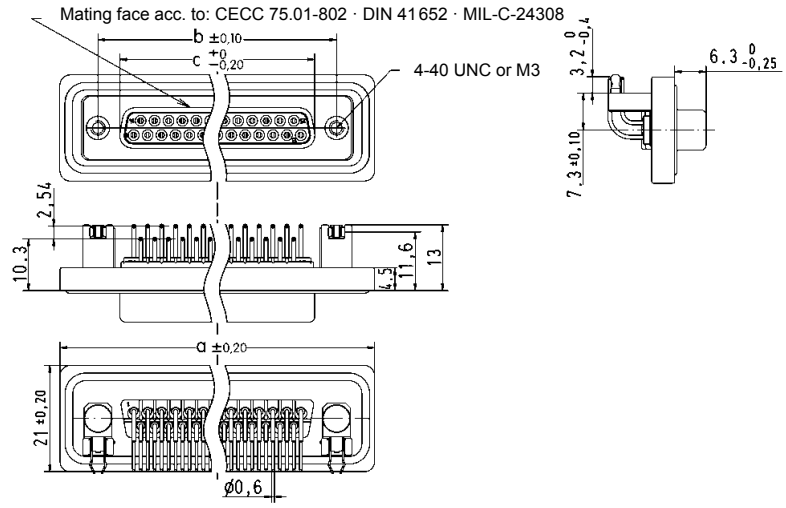

	a	b	c	d	g	h	i
9	40.0	25.00	16.4	16.9	4 x 2.74 = 10.96	3 x 2.74 = 8.22	25.0
15	48.3	33.30	24.7	25.2	7 x 2.74 = 19.18	6 x 2.74 = 16.44	33.3
25	62.0	47.04	38.5	38.9	12 x 2.76 = 33.12	11 x 2.76 = 30.36	47.0

Board drillings

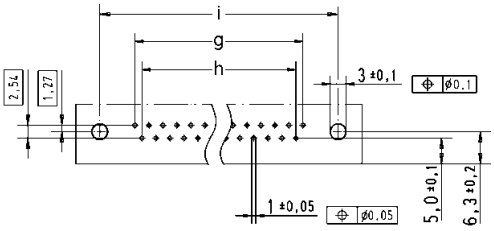

Number of contacts

9–50

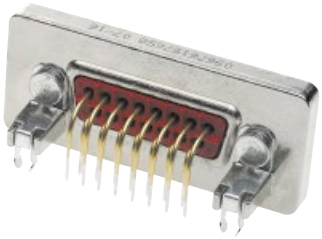

IP67, angled turned solder pins, with rear metal mounting plate, bracket and board lock

Identification	No. of contacts	Part number
		S4[1]
Male connector metal shell with dimples		
	9	09 67 609 . 658
	15	09 67 615 . 658
	25	09 67 625 . 658
	37	09 67 637 . 658
	50	09 67 650 . 658
Please insert digit for flange thread		
4-40 UNC ▶ 7		
M3 ▶ 9		
Female connector metal shell		
	9	09 67 609 . 758
	15	09 67 615 . 758
	25	09 67 625 . 758
	37	09 67 637 . 758
	50	09 67 650 . 758
Please insert digit for flange thread		
4-40 UNC ▶ 6		
M3 ▶ 8		

[1] S4 = 0.76 µm (30 µinch) Au or PdNi eqivalent

Number of contacts

9–50

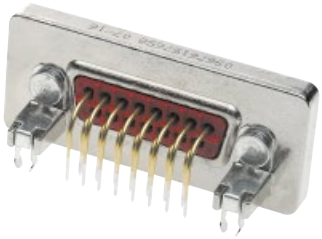

IP67, angled turned solder pins,
with rear metal mounting plate, bracket and board lock

Identification	Drawing	Dimensions in mm

Male connector
9 – 50 contacts

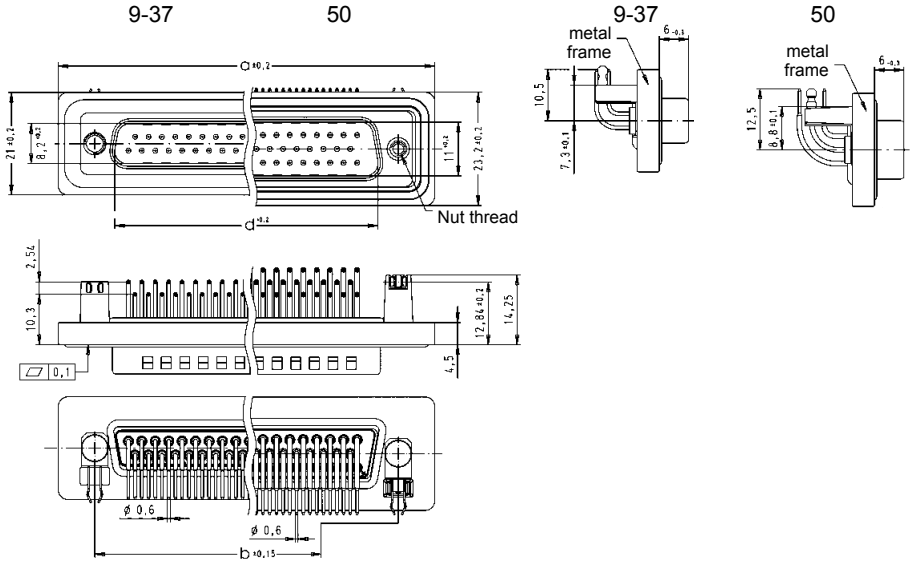

Female connector
9 – 50 contacts

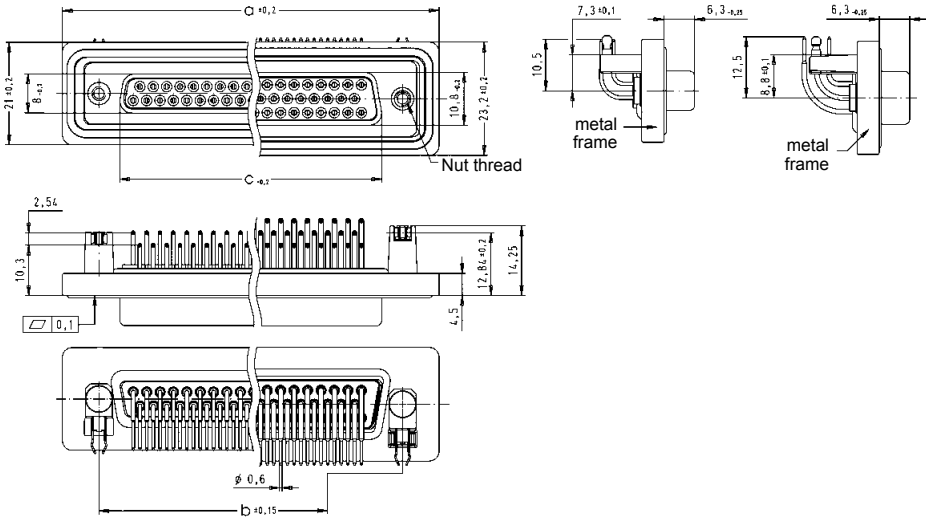

	a	b	c	d	g	h
9	40.0	25.00	16.4	16.9	4 x 2.74 = 10.96	3 x 2.74 = 8.22
15	48.3	33.30	24.7	25.2	7 x 2.74 = 19.18	6 x 2.74 = 16.44
25	62.0	47.04	38.5	38.9	12 x 2.76 = 33.12	11 x 2.76 = 30.36
37	78.5	63.50	54.9	55.3	18 x 2.76 = 49.68	17 x 2.76 = 46.92
50	76.1	61.10	52.5	52.8	16 x 2.76 = 44.16	15 x 2.76 = 41.40

Board drillings

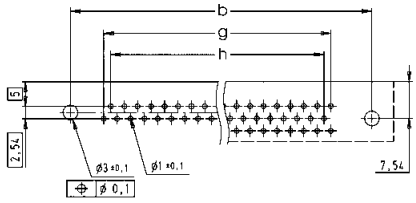

IP67 plastic hoods
IP67 metallized plastic hoods
for rear mount

Identification	No. of contacts	Part number
Hood[1]		
Black thermoplastic		
	9	09 67 009 043 .
	15	09 67 015 043 .
	25	09 67 025 043 .
	37	09 67 037 043 .
	50	09 67 050 043 .
Metallized thermo-plastic		
	9	09 67 009 053 .
	15	09 67 015 053 .
	25	09 67 025 053 .
	37	09 67 037 053 .
	50	09 67 050 053 .
Please insert digit for screw option		
Locking screw, thread 4-40 UNC ▶ 8		
Locking screw, ▶ 9 thread M3		

Drawing

Dimensions in mm

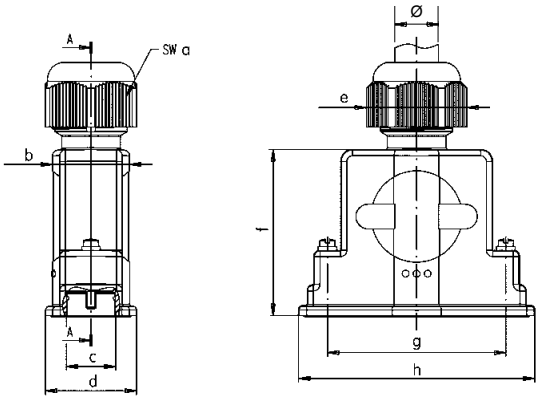

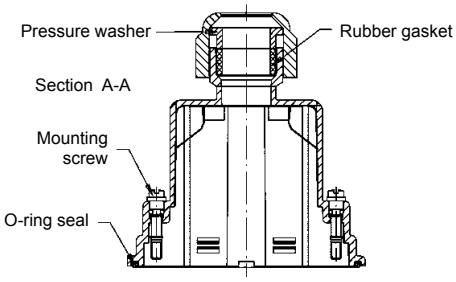

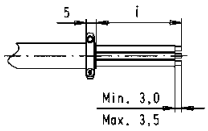

Stripping dimensions

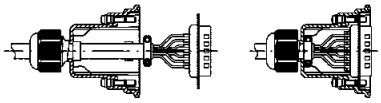

Mounting instructions:

– The peeled back cable braiding must not extend over the cable clamp, in order not to damage the gasket or to impair its performance.
– Pull back cable until cable clamp snaps into shielding plate.
– Snap connector into hood.

	a	b	c	d	e	f	g	h	i	Ø	
										min.	max.
9	20	16.5	13.0	20.2	22.1	36.4	25.0	39.8	18.0	6.0	8.0
15	24	16.5	13.0	20.2	26.6	36.4	33.3	48.5	18.0	6.0	10.5
25	24	20.3	13.0	24.0	26.6	43.6	47.0	62.3	45.0	8.0	12.0
37	24	20.3	13.0	24.0	26.6	52.1	63.5	78.6	60.0	8.0	12.0
50	29	22.0	16.0	27.6	32.1	52.1	61.1	75.7	60.0	9.0	14.0

[1] Not to be used with 9 to 50-pole crimp connectors

Accessories for IP67 connectors

Identification	No. of contacts	Part number	Drawing	Dimensions in mm
Front sealing rubber[1] IP67	9 15 25	09 67 002 9001 09 67 002 9002 09 67 002 9003		

Mounting example

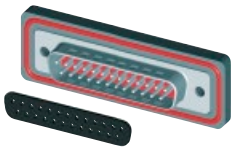

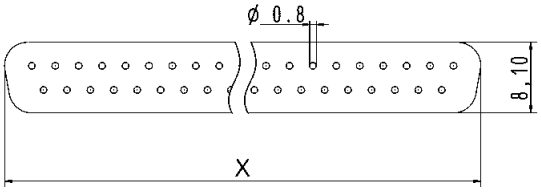

	x
9	16.7
15	24.8
25	38.8

Identification	No. of contacts	Part number	Drawing	Dimensions in mm
Female screw lock and spacing washer[2] M3		09 67 002 9006		
4-40 UNC		09 67 002 9007		

[2] Order 2 for each connector

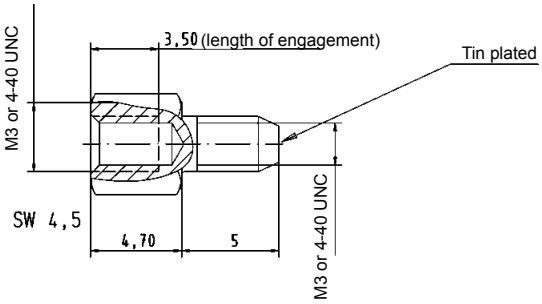

Identification	No. of contacts	Part number	Drawing	Dimensions in mm
Dust cap for female connectors[3] M3	9 15 25	09 67 002 9055 09 67 002 9056 09 67 002 9057		
4-40 UNC	9 15 25	09 67 002 9050 09 67 002 9051 09 67 002 9052		

[3] With inside glued front sealing rubber

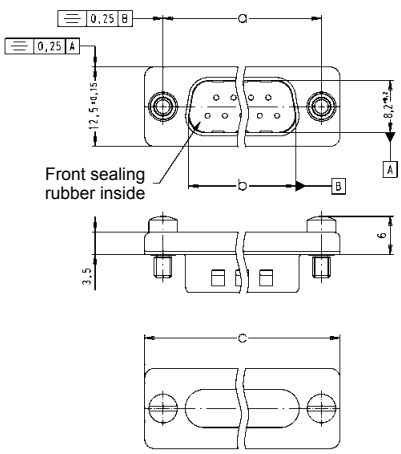

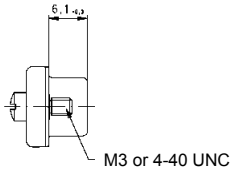

IP67 shielding concept

Front seal glued to shielding dust cap

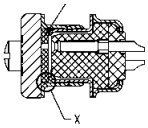

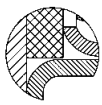

Detail X (Scale 5:1)

	a	b	c	d
9	25.00	16.9	30.8	16.4
15	33.30	25.2	39.1	24.7
25	47.04	38.9	53.0	38.5

Identification	No. of contacts	Part number	Drawing	Dimensions in mm
for male connectors[4] M3	9 15 25	09 67 002 9065 09 67 002 9066 09 67 002 9067		
4-40 UNC	9 15 25	09 67 002 9060 09 67 002 9061 09 67 002 9062		

[4] Order separately the front sealing rubber for an IP67 performance

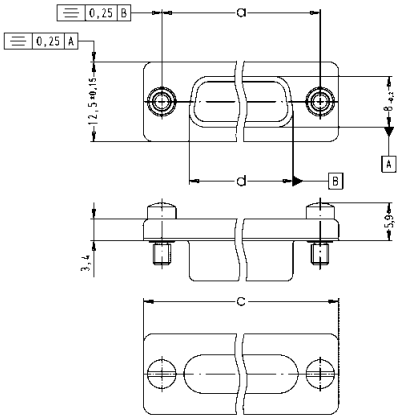

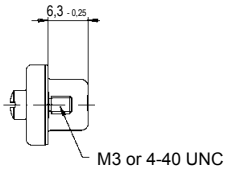

IP67 shielding concept

Front sealing rubber is mounted in male connector

sealed

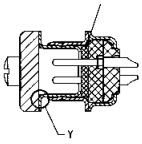

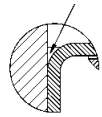

Detail Y (Scale 5:1)

[1] The front sealing rubber is to be used with hood 09 67 0xx 0436 and 09 67 0xx 0437 when a mated system needs to have the IP67 performance; in this case, the front sealing rubber is positioned in the IP67 male connector prior to the mating operation with the facing IP67 connector; it provides a full protection of the contacts at the mated area by preventing possible ingress of liquids or dust between the shells.

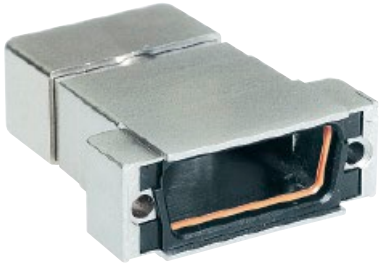

IP67 plastic hoods
IP67 metallized plastic hoods

Identification	No. of contacts	Part number
Hood		
Black thermoplastic		
	9	09 67 009 0436
	15	09 67 015 0436
	25	09 67 025 0436
Metallized thermoplastic		
	9	09 67 009 0437
	15	09 67 015 0437
	25	09 67 025 0437

Drawing — Dimensions in mm

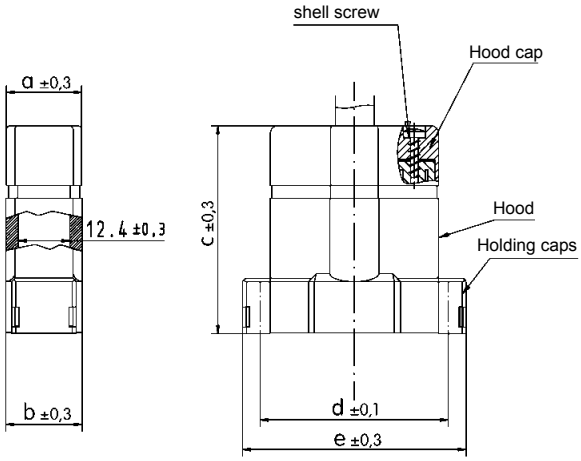

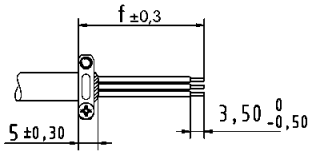

Mounting instructions

The stripped braid should not be fold back to avoid damaging the cable clamp and reducing its performance.

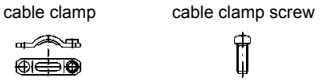

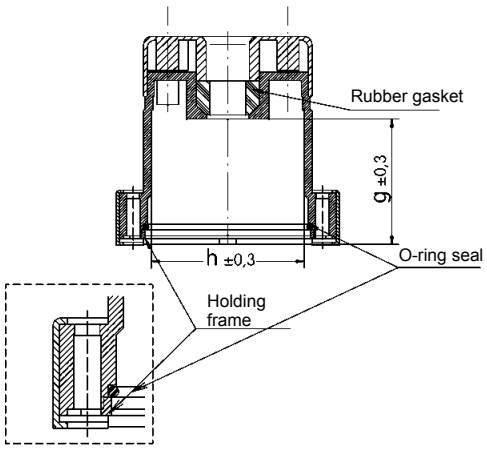

	a	b	c	d	e	f	g	h
9	15.6	15.6	41.0	25.00	33.6	23.0	25.0	17.0
15	15.6	15.6	46.8	33.30	42.0	27.5	30.8	25.1
25	18.8	19.1	52.0	47.04	55.7	31.5	33.8	38.8

Accessories for IP67 hoods

Identification	Part number	Drawing	Dimensions in mm
Short locking screw 4-40 UNC 	09 67 002 9008	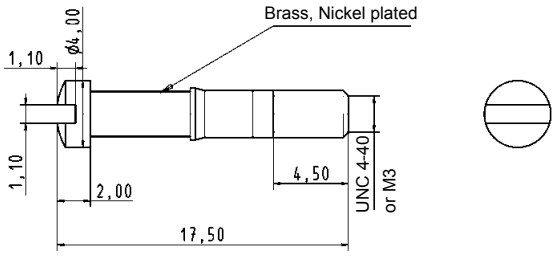	
Short locking screw M3 	09 67 002 9009		
Knurled locking screw 4-40 UNC 	09 67 002 9010	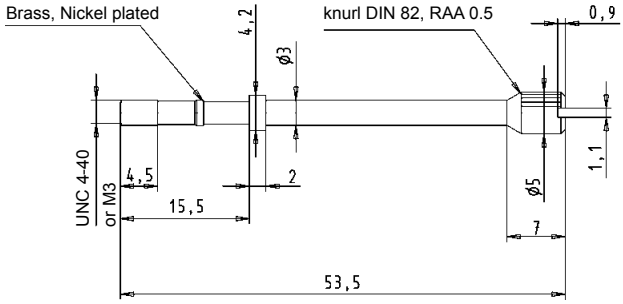	
Knurled locking screw M3 	09 67 002 9011		
Knurled locking screw 4-40 UNC with plastic cap 	09 67 002 9012	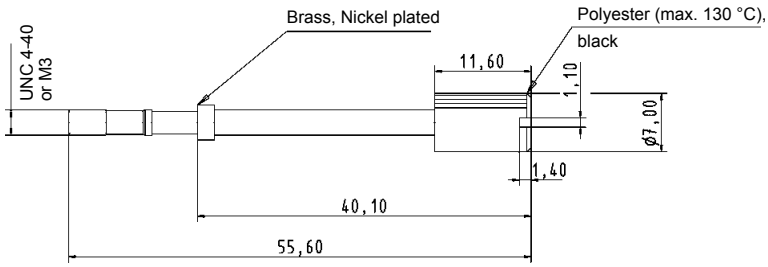	
Knurled locking screw M3 with plastic cap 	09 67 002 9013		

HARTING – Guarantee a secure connection

Modern electronic applications demand a high degree of mechanical and electrical security.

To meet these requirements, continuous screening from the cable to the PCB via the connector is achieved by using state of the art components to DIN 41652.

HARTING offer many solutions. These utilise various combinations of male and female connectors with hoods, featuring either screw locking or latching facilities.

Only 2 examples are shown:

- Continuous security screening and grounding with screw locking and metallized hood.
- Continuous grounding and vibration proof latching system with metallized hood.

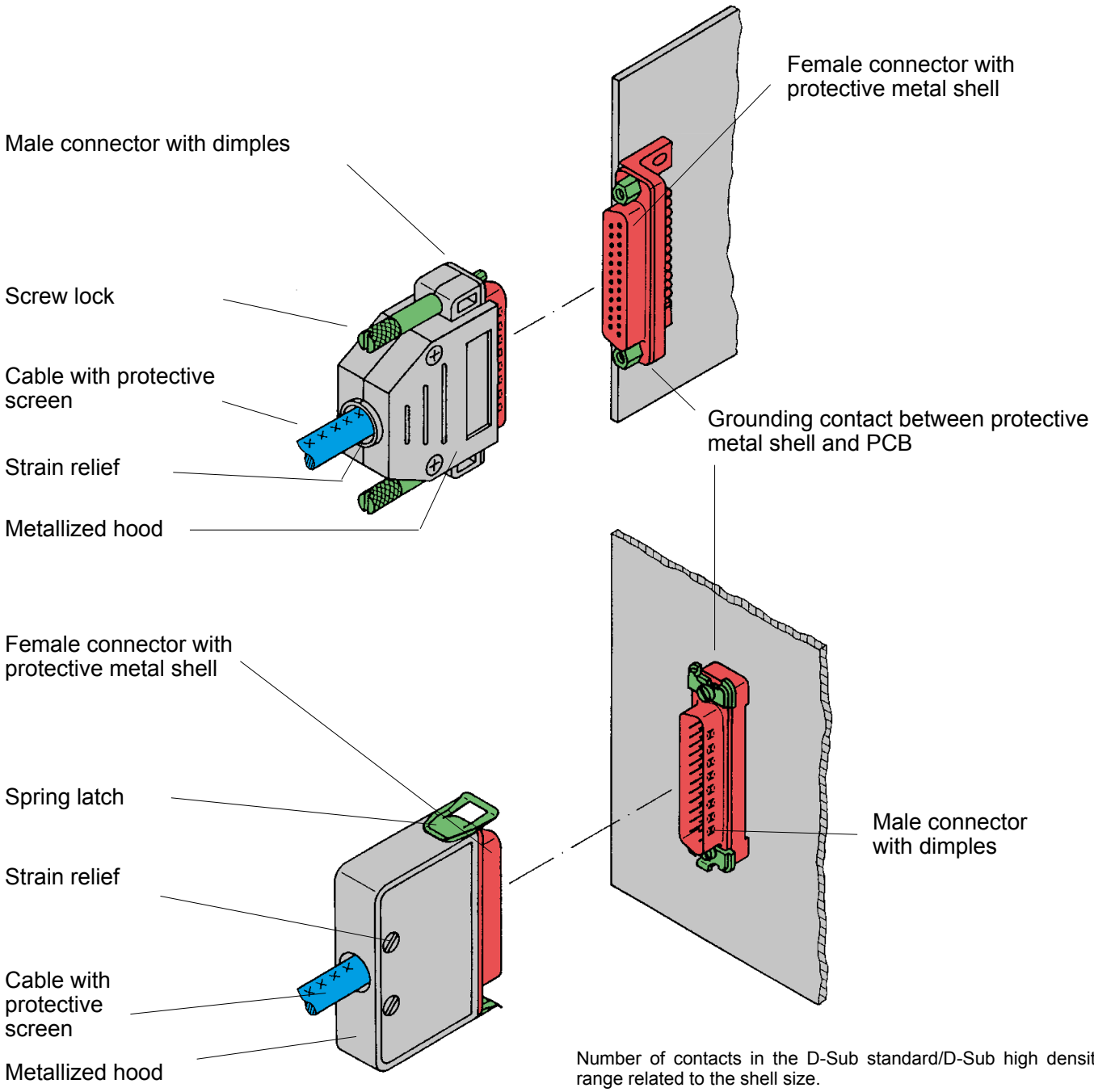

Number of contacts in the D-Sub standard/D-Sub high density range related to the shell size.

Shell size	D-Sub standard	D-Sub high density
1	9	15
2	15	26
3	25	44
4	37	62
5	50	78

Connector hoods for screw locking

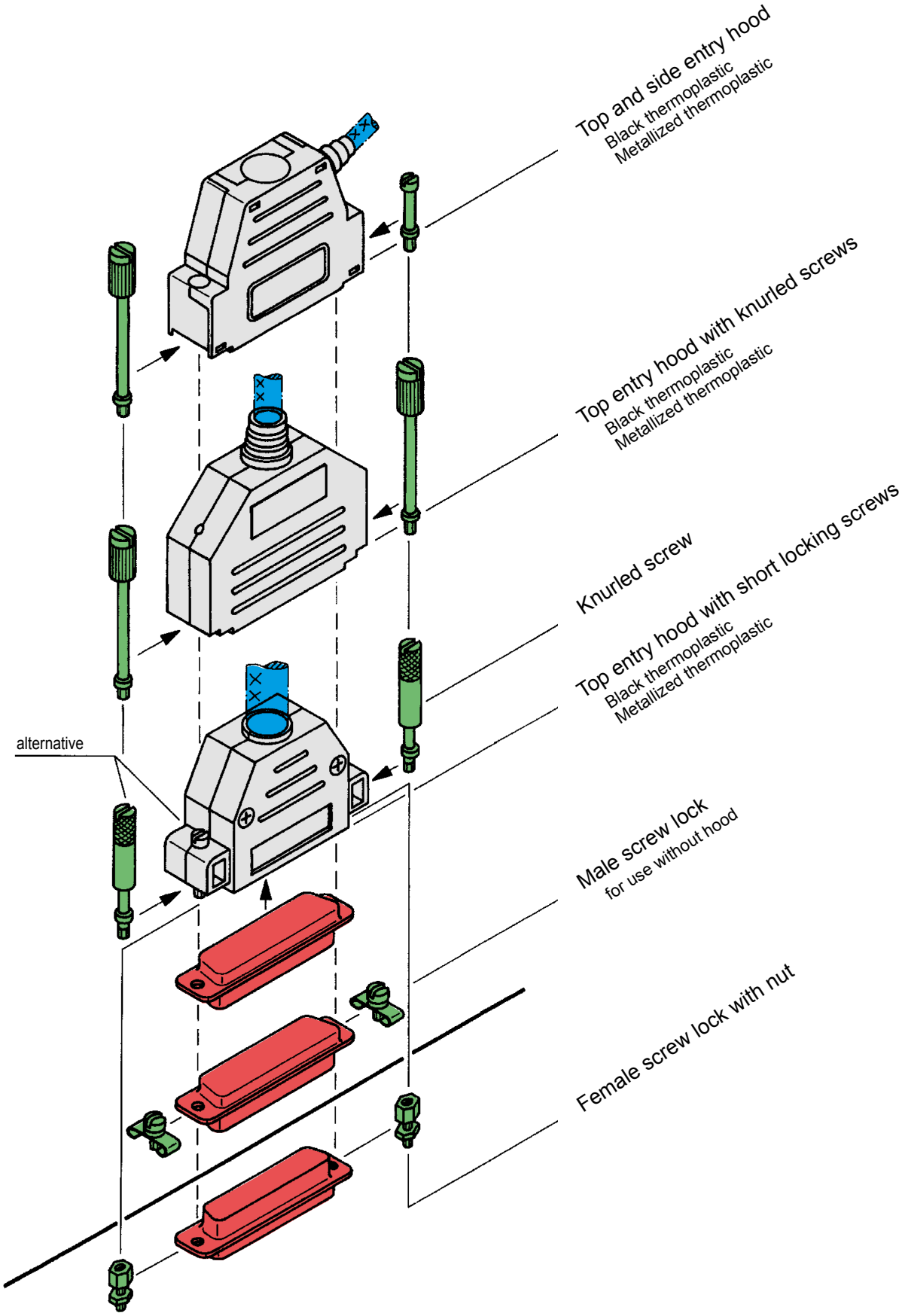

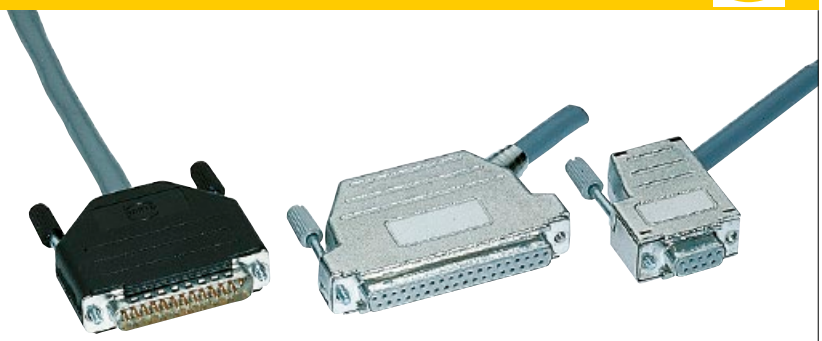

Top and side entry hoods with knurled screws

Identification	No. of contacts	Part number
Top entry hood Black thermoplastic	9	09 67 009 042 .
	15	09 67 015 042 .
Please insert digit for screw option	25	09 67 025 042 .
	37	09 67 037 042 .
Knurled screw, thread 4-40 UNC ▶ 4	50	09 67 050 042 .
Knurled screw, thread M3 ▶ 6		
Top entry hood Metallized thermoplastic	9	09 67 009 042 .
	15	09 67 015 042 .
	25	09 67 025 042 .
	37	09 67 037 042 .
Please insert digit for screw option		
Knurled screw, thread 4-40 UNC ▶ 5		
Knurled screw, thread M3 ▶ 7		
Top and side entry hood Black thermoplastic	9[3]	09 67 009 043 .
	15	09 67 015 043 .
	25	09 67 025 043 .
	37[1]	09 67 037 043 .
Please insert digit for screw option		
Knurled screw, thread 4-40 UNC ▶ 4		
Knurled screw, thread M3 ▶ 0		
Top and side entry hood Metallized thermoplastic	9[3]	09 67 009 043 .
	15	09 67 015 043 .
	25[2]	09 67 025 043 .
	37[1]	09 67 037 043 .
Please insert digit for screw option		
Knurled screw, thread 4-40 UNC ▶ 5		
Knurled screw, thread M3 ▶ 1		

Drawing — Dimensions in mm

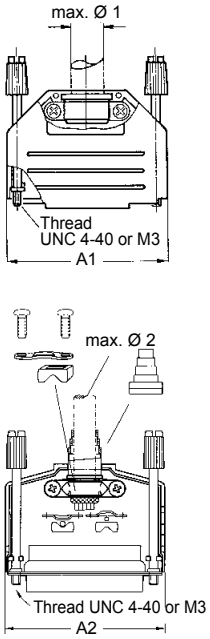

	A1	A2	B	C1	C2	max. Ø 1	max. Ø 2
9	31.5	32.5	15	34	38	8.0	11.5
15	40.0	41.0	15	34	38	11.5	11.5
25	53.5	54.5	15	40	40	11.5	11.5
37	71.0	71.0	15	40	40	11.5	11.5
50	67.5		19	40		14.0	

C1: non-metallized C2: metallized

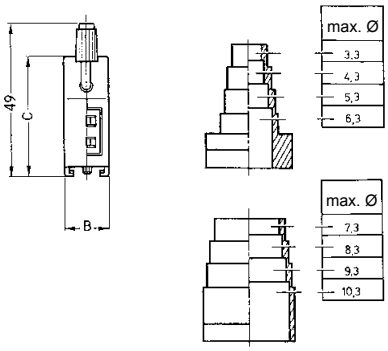

Cut appropriate cable entry to fit actual cable diameter

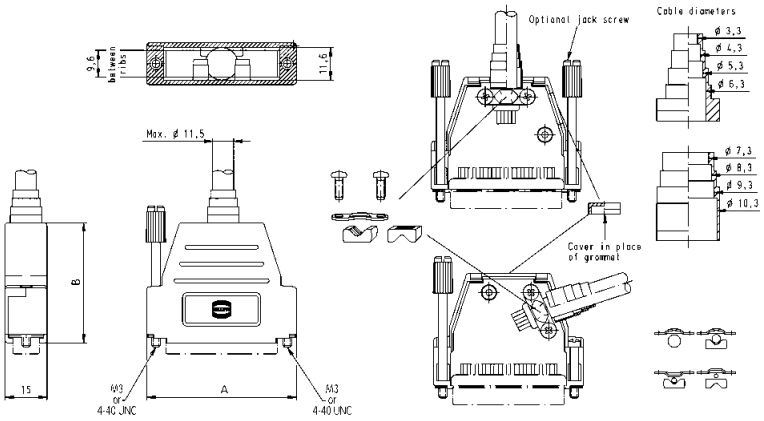

	A	B
9	31.5	40
15	40.0	40
25	53.5	43
37	71.3	40

[1] 37-pole is only available with side entry and with knurled screw, thread 4-40 UNC
[2] Cable clamp kit for two outputs is available as accessories (it includes: screw, metal clamp, plastic insert and grommet). With Part number 09 67 001 9988 ten of these kits are delivered.
[3] 9-pole hood provided with only one screw on the opposite side of the cable entry.

Operating temperature for all hoods on this page: -55 °C … +110 °C

Top and side entry hoods with short screws

Identification	No. of contacts	Part number
Top and side entry hood Black thermoplastic	9[1]	09 67 009 046 .
	15	09 67 015 046 .
	25	09 67 025 046 .
	37	09 67 037 046 .
Please insert digit for screw option		
Short screw, thread 4-40 UNC ▶ 3		
Short screw, ▶ 2 thread M3		
Top and side entry hood Metallized thermoplastic	9[1]	09 67 009 046 .
	15	09 67 015 046 .
	25	09 67 025 046 .
	37	09 67 037 046 .
Please insert digit for screw option		
Short screw, thread 4-40 UNC ▶ 5		
Short screw, ▶ 4 thread M3		

Drawing

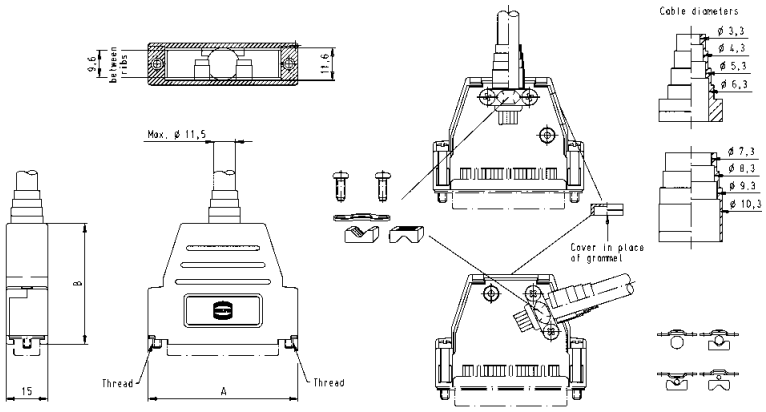

Dimensions in mm

	A	B
9	31.5	40
15	40.0	40
25	53.5	43
37	71.3	40

[1] 9-pole hood provided with only one screw on the opposite side of the cable entry.
Operating temperature for all hoods on this page: -55 °C … +110 °C

	Knurled screw M3, beige	Knurled screw 4-40 UNC, beige	Knurled screw M3, black	Knurled screw 4-40 UNC, black	Cable clamp, small	Cable clamp, large	Cable clamp screw	Metallized insert, small
					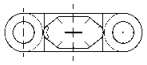	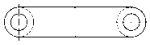	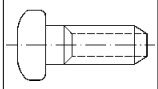	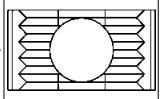
Part number	09 67 002 9152	09 67 002 9081	09 67 001 9961	09 67 002 9024	09 67 002 9104	09 67 002 9106	09 67 002 9102	09 67 002 9103
09 67 009 0424				2	1		2	
09 67 015 0424				2		1	2	
09 67 025 0424				2		1	2	
09 67 037 0424				2		1	2	
09 67 050 0424				2		1	2	
09 67 009 0426			2		1		2	
09 67 015 0426			2			1	2	
09 67 025 0426			2			1	2	
09 67 037 0426			2			1	2	
09 67 050 0426			2			1	2	
09 67 009 0425		2			1		2	1
09 67 015 0425		2				1	2	
09 67 025 0425		2				1	2	
09 67 037 0425		2				1	2	
09 67 009 0427	2				1		2	1
09 67 015 0427	2					1	2	
09 67 025 0427	2					1	2	
09 67 037 0427	2					1	2	

	Knurled screw M3, beige	Knurled screw 4-40 UNC, beige	Knurled screw M3, black	Knurled screw 4-40 UNC, black	Short screw M3, 18 mm	Short screw 4-40 UNC, 18 mm	Short screw M3, 12 mm	Short screw 4-40 UNC, 12 mm
					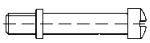	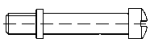	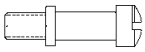	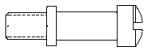
Part number	09 67 002 9152	09 67 002 9081	09 67 001 9961	09 67 002 9024	09 67 002 9163	09 67 001 9979	09 67 002 9162	09 67 002 9078
09 67 009 0434				1				
09 67 015 0434				1				1
09 67 025 0434				1		1		
09 67 037 0434								1
09 67 009 0430			1					
09 67 015 0430			1				1	
09 67 025 0430			1		1			
09 67 009 0435		1						
09 67 015 0435		1						1
09 67 025 0435		1				1		
09 67 037 0435								1
09 67 009 0431	1							
09 67 015 0431	1						1	
09 67 025 0431	1				1			
09 67 009 0463						1		
09 67 015 0463								2
09 67 025 0463						2		
09 67 037 0463								2
09 67 009 0462					1			
09 67 015 0462							2	
09 67 025 0462					2			
09 67 037 0462							2	
09 67 009 0465						1		
09 67 015 0465								2
09 67 025 0465						2		
09 67 037 0465								2
09 67 009 0464					1			
09 67 015 0464							2	
09 67 025 0464					2			
09 67 037 0464							2	

Scope of delivery and spare parts

	Metallized insert, large	Small plastic insert, black	Large plastic insert, black	Grommet kit, metallized	Grommet kit, black (optional)	Rubber grommet, small (optional)	Rubber grommet, large (optional)
	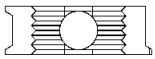	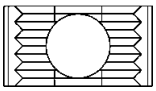	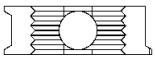	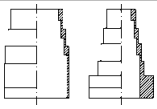	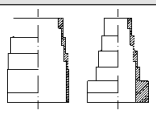	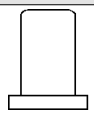	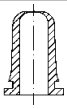
Part number	09 67 002 9105	09 67 002 9150	09 67 002 9151	09 67 002 9075	09 67 001 9968	09 67 002 9119	09 67 001 9981
09 67 009 0424		1			1	1	
09 67 015 0424			1		1		1
09 67 025 0424			1		1		1
09 67 037 0424			1		1		1
09 67 050 0424			1		1		no
09 67 009 0426		1			1	1	
09 67 015 0426			1		1		1
09 67 025 0426			1		1		1
09 67 037 0426			1		1		1
09 67 050 0426			1		1		no
09 67 009 0425							
09 67 015 0425	1			1			
09 67 025 0425	1			1			
09 67 037 0425	1			1			
09 67 009 0427							
09 67 015 0427	1			1			
09 67 025 0427	1			1			
09 67 037 0427	1			1			

	Cable clamp, small	Cable clamp screw	Metallized insert, small	Small plastic insert, black	Grommet kit, metallized	Plastic plug, metallized	Plastic plug, black
	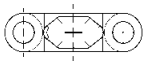	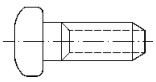	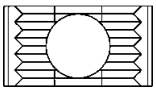	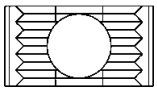	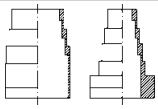	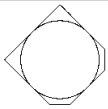	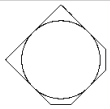
Part number	09 67 002 9104	09 67 002 9102	09 67 002 9103	09 67 002 9150	09 67 002 9075	09 67 001 9980	09 67 002 9161
09 67 009 0434	1	2		1			1
09 67 015 0434	1	2		1			1
09 67 025 0434	1	2		1			1
09 67 037 0434	1	2		1			
09 67 009 0430	1	2		1			1
09 67 015 0430	1	2		1			1
09 67 025 0430	1	2		1			1
09 67 009 0435	1	2	1		1	1	
09 67 015 0435	1	2	1		1	1	
09 67 025 0435	1	2	1		1	1	
09 67 037 0435	1	2	1		1	N/A	
09 67 009 0431	1	2	1		1	1	
09 67 015 0431	1	2	1		1	1	
09 67 025 0431	1	2	1		1	1	
09 67 009 0463	1	2		1			1
09 67 015 0463	1	2		1			1
09 67 025 0463	1	2		1			1
09 67 037 0463	1	2		1			N/A
09 67 009 0462	1	2		1			1
09 67 015 0462	1	2		1			1
09 67 025 0462	1	2		1			1
09 67 037 0462	1	2		1			N/A
09 67 009 0465	1	2	1		1	1	
09 67 015 0465	1	2	1		1	1	
09 67 025 0465	1	2	1		1	1	
09 67 037 0465	1	2	1		1	N/A	
09 67 009 0464	1	2	1		1	1	
09 67 015 0464	1	2	1		1	1	
09 67 025 0464	1	2	1		1	1	
09 67 037 0464	1	2	1		1	N/A	

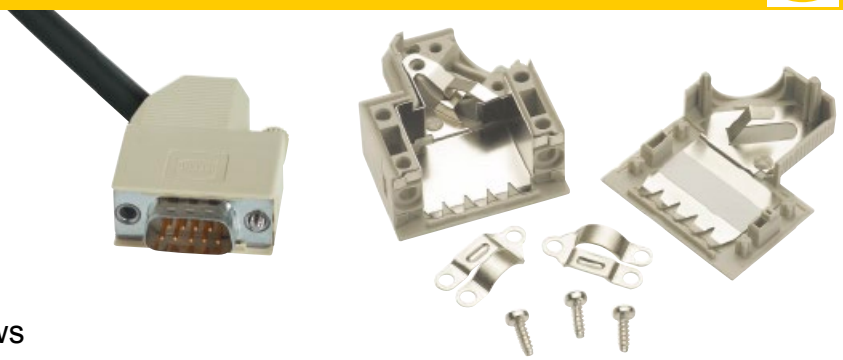

Side entry hoods with knurled screws

Identification	No. of contacts	Part number
Hood[1] grey thermoplastic RAL 7032	9	09 67 009 0571
	15	09 67 015 0571
	25	09 67 025 0571
	37	09 67 037 0571
	50	09 67 050 0571
grey thermoplastic with internal tin-plate screening	9	09 67 009 0573
	15	09 67 015 0573
	25	09 67 025 0573
	37	09 67 037 0573
	50	09 67 050 0573
9-37 way for packaging density of 3 TE (15.24 mm)		

Drawing — Dimensions in mm

Upper hood part / Lower hood part

9 contacts

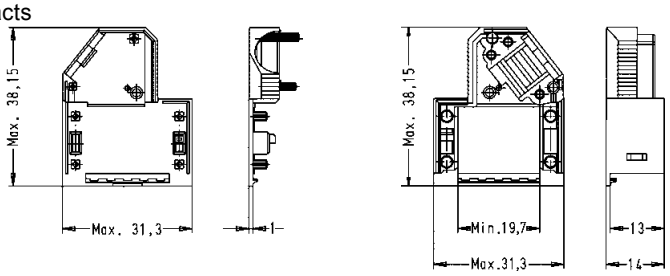

15 – 50 contacts

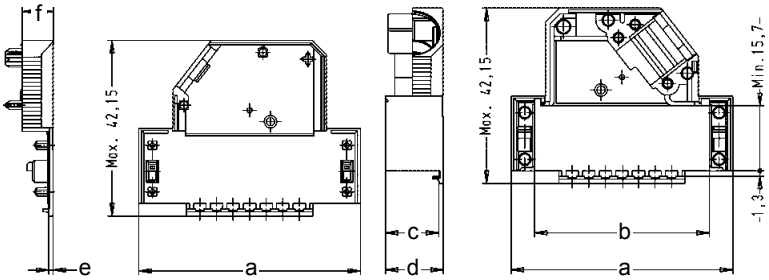

	a max.	b min.	c	d	e	f
15	39.62	28.40	13.00	14.00	1.00	7.50
25	53.52	42.20	13.00	14.00	1.00	7.50
37	69.80	58.65	13.00	14.00	1.00	7.50
50	67.41	56.18	16.00	17.50	1.50	9.50

Identification	No. of contacts	Part number
Knurled screw Thread UNC	9-50	09 67 000 9971[2]
Thread M3		09 67 001 9965*

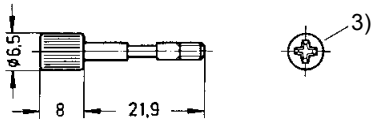

Grey head / Nickel plated steel

Identification	No. of contacts	Part number
Thread UNC	9-50	09 67 001 9978
Thread M3		09 67 001 9977

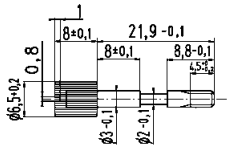

Full metal part

Identification	Part number
Tooling for assembly of hoods	
Top part	09 99 000 0215*
Bottom part	09 99 000 0216*

* Not normally kept in stock
[1] Order knurled screw separately
[2] 9 way 1 per hood – 15-50 way 2 per hood

[3] Screw driver type ISO PH 1 for philips screw No 1 ISO norm 4757
Operating temperature for all hoods on this page: -30 °C … +100 °C

Top entry hoods with knurled or locking screws

Identification	No. of contacts	Part number
Hood[3] Black thermoplastic with short locking screws	9	09 67 009 0442
	15	09 67 015 0442
	25	09 67 025 0442
	37	09 67 037 0442
	50	09 67 050 0442
Hood[3] Metallized thermo-plastic with short locking screws	9	09 67 009 04 . 3
	15	09 67 015 04 . 3
	25	09 67 025 04 . 3
	37	09 67 037 04 . 3
	50	09 67 050 04 . 3
Please insert digit for screw option		
Thread 4-40 UNC ▶ 4		
Thread M3 ▶ 2		

Drawing — Dimensions in mm

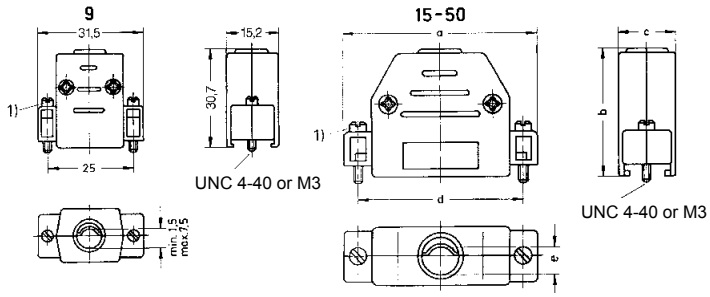

	a	b	c	d	e min.	e max.
15	40.0	34.7	15.2	33.3	3.3	8.5
25	53.2	39.7	15.2	47.0	3.5	11.0
37	70.0	39.7	15.2	63.5	3.5	11.0
50	67.5	39.7	18.2	61.1	9.3	12.0

Identification	No. of contacts	Part number
Knurled screw for metallized hood		
Thread UNC	9-50	09 67 000 9925[2]
Thread M3	9-50	09 67 000 9930[2]

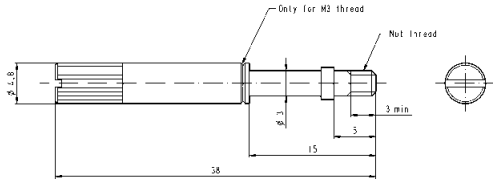

Identification	No. of contacts	Part number
Screened hood Order cover and internal metal screen separately		
Cover[4] Black thermoplastic with knurled screws	9	09 67 009 0422
	15	09 67 015 0422
	25	09 67 025 0422
	37	09 67 037 0422
Internal metal screen[4] metallized	9	09 67 009 0421
	15	09 67 015 0421
(Crimp tool see chapter 20)	25	09 67 025 0421
	37	09 67 037 0421

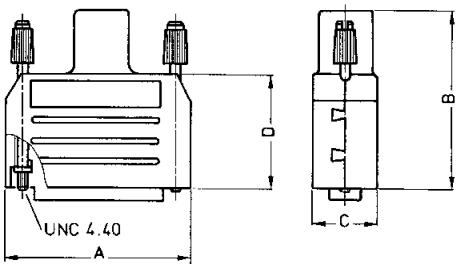

	A	B	C	D
9	35.0	54	19.1	34
15	43.0	54	19.1	34
25	57.5	54	19.1	34
37	74.0	54	19.1	34

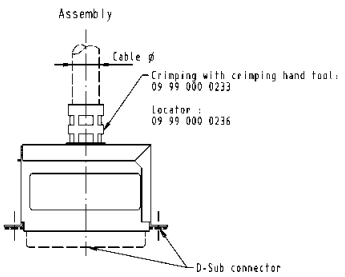

	Cable Ø (mm) min.	Cable Ø (mm) max.
9	6.1	8.8
15	6.1	8.8
25	8.0	10.3
37	9.5	11.5

[1] Use of knurled screws is possible. Please order separately
[2] Order 2 for each hood
[3] Operating temperature: -20 °C … +90 °C
[4] Operating temperature: -55 °C … +110 °C

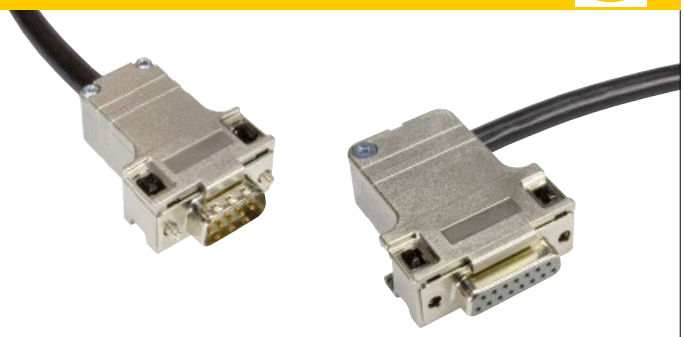

Metallized thermoplastic top and side entry hoods with short screws

Identification	No. of contacts	Part number
Top entry hood Short screw, thread 4-40 UNC	9	09 67 009 0446
	15	09 67 015 0446
	25	09 67 025 0446
	37	09 67 037 0446
	50	09 67 050 0446
Side entry hood Short screw, thread 4-40 UNC	9	09 67 009 0448
	15	09 67 015 0448
	25	09 67 025 0448
	37	09 67 037 0448
	50	09 67 050 0448

Drawing — Dimensions in mm

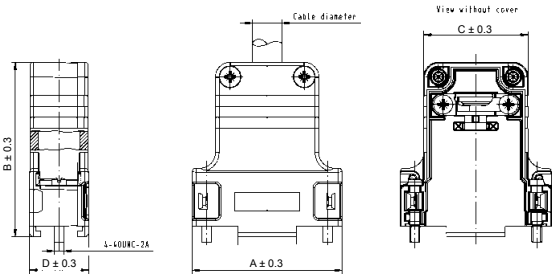

Poles	A	B	C	D	Cable diameter Min.	Cable diameter Max.
9	31.8	41.6	20.0	16.7	4.0	11.0
15	41.2	47.8	28.4	16.2	4.0	11.0
25	54.9	54.8	42.1	16.2	4.0	12.0
37	71.4	57.8	58.6	18.9	6.0	13.0
50	69.0	57.8	56.2	19.5	6.0	14.0

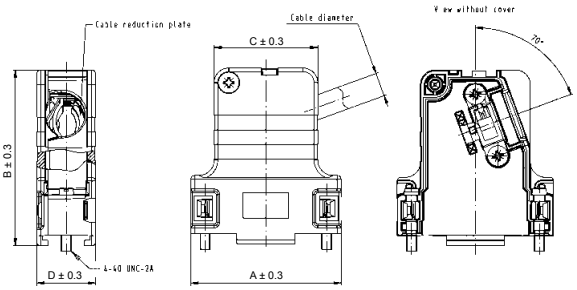

Full metal top and side entry hoods with knurled screws

Identification	No. of contacts	Part number	Drawing	Dimensions in mm
Top entry hood incl. grommet set halves				
Please insert digit for screw option	9	09 67 009 034 .		
	15	09 67 015 034 .		
	25	09 67 025 034 .		
	37	09 67 037 034 .		
	50	09 67 050 034 .		
Knurled screw, thread 4-40 UNC ▶ 3				
Knurled screw, thread M3 ▶ 8				
Spare knurled screw thread 4-40 UNC		09 67 002 9029		
thread M3		09 67 002 9101		
Side entry hood incl. grommet set halves				
Please insert digit for screw option	9[1]	09 67 009 033 .		
	15	09 67 015 033 .		
	25	09 67 025 033 .		
	37	09 67 037 033 .		
	50	09 67 050 033 .		
Knurled screw, thread 4-40 UNC ▶ 3				
Knurled screw, thread M3 ▶ 6				
Spare knurled screw thread 4-40 UNC		09 67 002 9028		
thread M3		09 67 001 9997		
Spare grommet set halves				
9-37 poles		09 67 002 9092		
50 poles		09 67 002 9094		

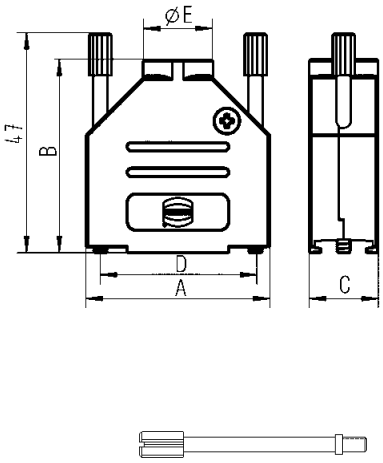

Poles	A	B	C	D	E
9	31.0	39.5	14.8	25.0	11.7
15	39.5	41.5	14.8	33.3	11.7
25	53.5	48.5	14.8	47.0	11.7
37	71.0	53.0	14.8	63.5	11.7
50	67.5	54.0	18.7	61.1	17.0

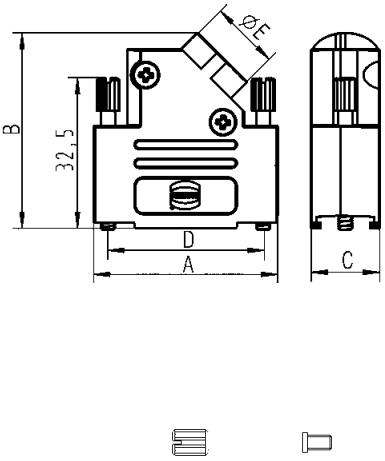

Poles	A	B	C	D	E
9	31.0	37.7	14.7	–	11.7
15	39.5	42.0	14.7	33.3	11.7
25	53.2	41.3	14.7	47.0	11.7
37	69.7	41.8	14.7	63.7	11.7
50	67.4	44.9	17.4	61.1	17.0

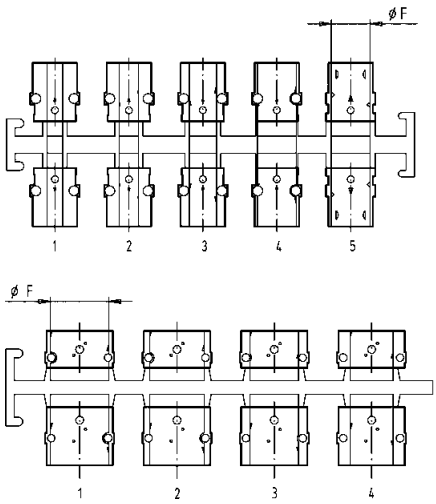

Grommet dimensions		
Number	Diameter F	
	9-37 poles	50 poles
1	4.0	15.0
2	5.0	14.0
3	7.0	12.5
4	9.0	11.0
5	10.2	—

[1] 9-pole hood provided with only one screw on the opposite side of the cable entry.
Operating temperature for all hoods on this page: -40 °C … +120 °C

Full metal top and side entry hoods with short screws

Identification	No. of contacts	Part number
Top entry hood		
	9	09 67 009 034 .
	15	09 67 015 034 .
	25	09 67 025 034 .
	37	09 67 037 034 .
	50	09 67 050 034 .
Please insert digit for screw option		
Locking screw, thread 4-40 UNC ▶ 4		
Locking screw, thread M3 ▶ 9		
Side entry hood		
	9	09 67 009 033 .
	15	09 67 015 033 .
	25	09 67 025 033 .
	37	09 67 037 033 .
	50	09 67 050 033 .
Please insert digit for screw option		
Locking screw, thread 4-40 UNC ▶ 4		
Locking screw, thread M3 ▶ 5		
Spare short locking screw		
thread 4-40 UNC		09 67 002 9090
thread M3		09 67 002 9091

Drawing — Dimensions in mm

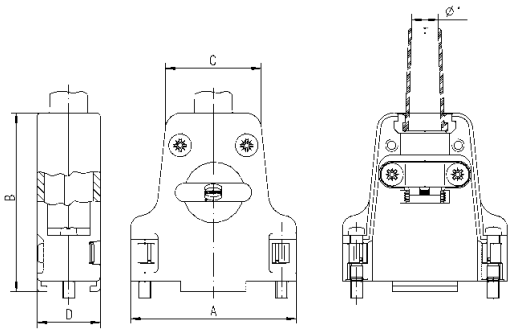

Poles	A	B	C	D	Ø F1		Ø F2	Ø F3
					Min.	Max.		
9	31.8	42.4	20.8	15.4	3.0	9.5	6.5	–
15	40.3	43.5	23.3	15.4	3.0	8.5	6.5	12.5
25	54.0	47.7	31.7	15.4	3.0	8.5	8.0	12.5
37	70.2	50.4	48.2	18.4	3.0	12.0	9.0	15.0
50	67.8	50.5	45.8	18.2	3.0	12.0	9.7	15.0

* Cable diameter without rubber bushing = Ø F1
Cable diameter with rubber bushing = Ø F2
Cable diameter without rubber bushing and without cable reduction plate = Ø F3

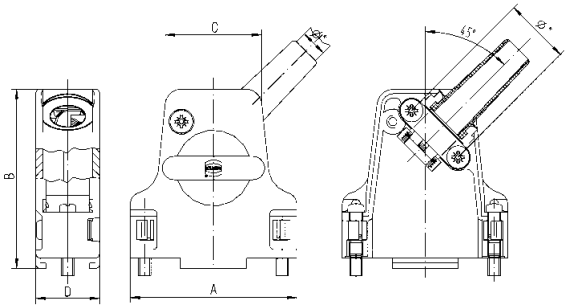

Operating temperature for all hoods on this page: -35 °C … +100 °C

Full metal top and side entry hoods with hexagonal screws

Identification	No. of contacts	Part number
Top entry hood		
	9	09 67 009 032 .
	15	09 67 015 032 .
	25	09 67 025 032 .
	37	09 67 037 032 .
	50	09 67 050 032 .
Please insert digit for screw option		
Hexagonal screw, thread 4-40 UNC ▶ 0		
Hexagonal screw, thread M3 ▶ 1		
Side entry hood		
	9	09 67 009 033 .
	15	09 67 015 033 .
	25	09 67 025 033 .
	37	09 67 037 033 .
	50	09 67 050 033 .
Please insert digit for screw option		
Hexagonal screw, thread 4-40 UNC ▶ 8		
Hexagonal screw, thread M3 ▶ 9		

Drawing — Dimensions in mm

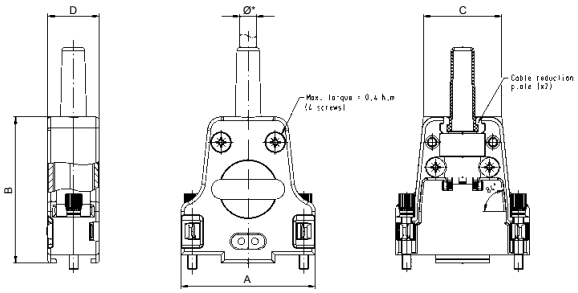

Poles	A	B	C	D	Ø F1 Min.	Ø F1 Max.	Ø F2	Ø F3
9	31.6	42.0	20.8	15.2	3.0	9.5	6.5	–
15	40.0	43.5	23.3	15.2	3.0	8.5	6.5	12.5
25	53.7	47.5	31.7	15.2	3.0	8.5	8.0	12.5
37	70.2	50.5	48.2	18.2	3.0	12.0	9.0	15.0
50	67.8	50.5	45.8	18.2	3.0	12.0	9.7	15.0

* Cable diameter without rubber bushing = Ø F1
Cable diameter with rubber bushing = Ø F2
Cable diameter without rubber bushing and without cable reduction plate = Ø F3

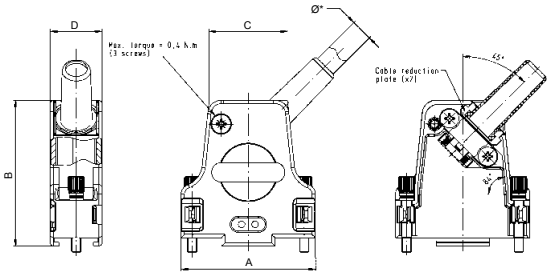

Full metal top entry hoods with premounted threaded inserts

Identification	No. of contacts	Part number
Top entry hood		
	9	09 67 009 032 .
	15	09 67 015 032 .
	25	09 67 025 032 .
	37	09 67 037 032 .
	50	09 67 050 032 .
Please insert digit for premounted insert		
thread 4-40 UNC ▶ 2		
thread M3 ▶ 3		
Locking hook		09 67 002 9031[1)]
Latch lock bolt		
Front mount		
thread 4-40 UNC		09 67 002 9041[1)]
thread M3		09 67 002 9042[1)]
Rear mount		
thread 4-40 UNC		09 67 002 9032[1)]
thread M3		09 67 002 9040[1)]
Cable to cable		
thread 4-40 UNC		09 67 002 9044[1)]
thread M3		09 67 002 9045[1)]

Drawing — Dimensions in mm

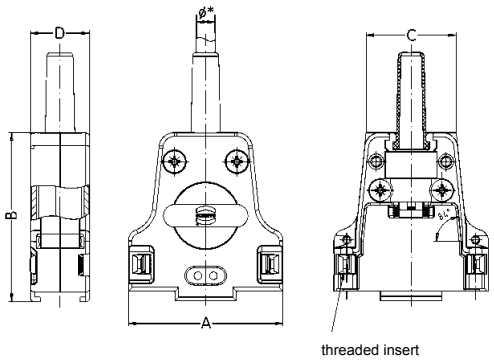

Poles	A	B	C	D	Ø F1		Ø F2	Ø F3
					Min.	Max.		
9	31.6	42.0	20.8	15.2	3.0	9.5	6.5	–
15	40.0	43.5	23.3	15.2	3.0	8.5	6.5	12.5
25	53.7	47.5	31.7	15.2	3.0	8.5	8.0	12.5
37	70.2	50.5	48.2	18.2	3.0	12.0	9.0	15.0
50	67.8	50.5	45.8	18.2	3.0	12.0	9.7	15.0

* Cable diameter without rubber bushing = Ø F1
Cable diameter with rubber bushing = Ø F2
Cable diameter without rubber bushing and without cable reduction plate = Ø F3

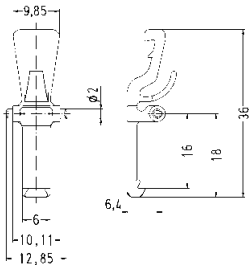

Front mount

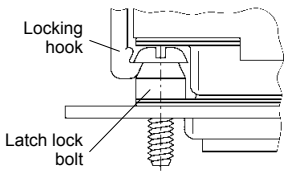

Rear mount

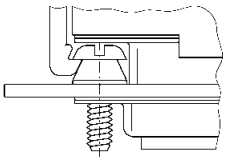

Cable to cable

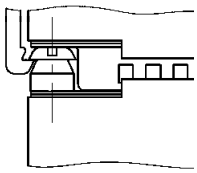

[1)] Order 2 for each hood
Operating temperature for all hoods on this page: -35 °C … +100 °C

Full metal top and side entry hoods with different screw options

Identification	No. of contacts	Part number
40° side entry hood		
with internal grounding block		
	9	61 03 001 . 013
	15	61 03 001 . 014
	25	61 03 001 . 015
without internal grounding block	9	61 03 001 . 013 010

Drawing — Dimensions in mm

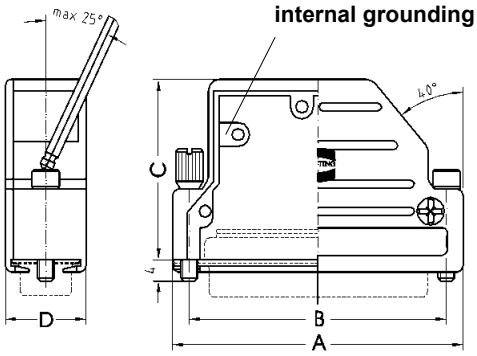

No. of contacts	A	B	C	D
9	31.0	25.0	35.0	15.0
15	39.3	33.3	35.0	15.0
25	53.0	47.0	35.0	15.0

Identification	No. of contacts	Part number
Top/side entry hood		
with internal grounding block		
	9	61 03 001 . 010
	15	61 03 001 . 016
	25	61 03 001 . 017[1)]
	37	61 03 001 . 018[1)]
	50	61 03 001 . 019[1)]
without internal grounding block	9	61 03 001 . 010 010

Please insert digit for screw option

Knurled screw, thread 4-40 UNC ▶	0
Hexagonal screw, thread M3 with captive washer ▶	1
Hexagonal screw, thread 4-40 UNC with captive washer ▶	2
Knurled screw, thread M3 ▶	3

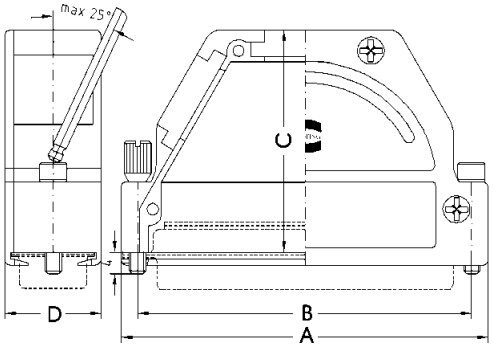

No. of contacts	No. of cable entries	A	B	C	D
9	1 (top)	31.0	25.0	38.0	15.0
15	1 (top)	39.5	33.3	35.0	15.0
25	3	53.0	47.0	43.0	15.0
37	3	69.5	63.5	43.0	15.0
50	3	67.2	61.6	43.0	17.8

[1)] Part number contains two blanking pieces
Operating temperature for all hoods on this page: -20 °C … +90 °C

Accessories see page 05.162

Full metal top and side entry hoods with different screw options

Identification	No. of contacts	Part number
5° top entry hood with 3 cable entries		
with internal grounding block	37	61 03 001 . 118
	50	61 03 001 . 119
without internal grounding block	37	61 03 001 . 118 010
	50	61 03 001 . 119 010

Please insert digit for screw option

Knurled screw, thread 4-40 UNC ▶	0
Hexagonal screw, thread M3 with captive washer ▶	1
Hexagonal screw, thread 4-40 UNC with captive washer ▶	2
Knurled screw, thread M3 ▶	3

Drawing — Dimensions in mm

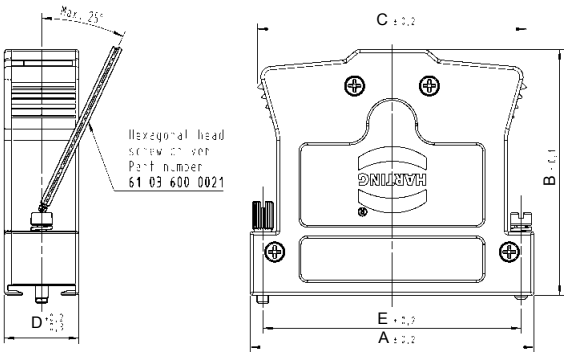

No. of contacts	A	B	C	D	E
37	69.5	52.0	58.2	14.8	63.5
50	67.1	58.0	63.6	17.6	61.1

Identification	No. of contacts	Part number
Top entry hood for InduCom 9		
Hexagonal screw, thread 4-40 UNC	9	66 67 009 0346
Hexagonal screw, thread M3	9	66 67 009 0347

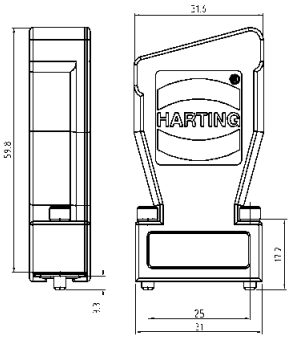

2 cable entries

Notes

Connector hoods for spring or slide locking

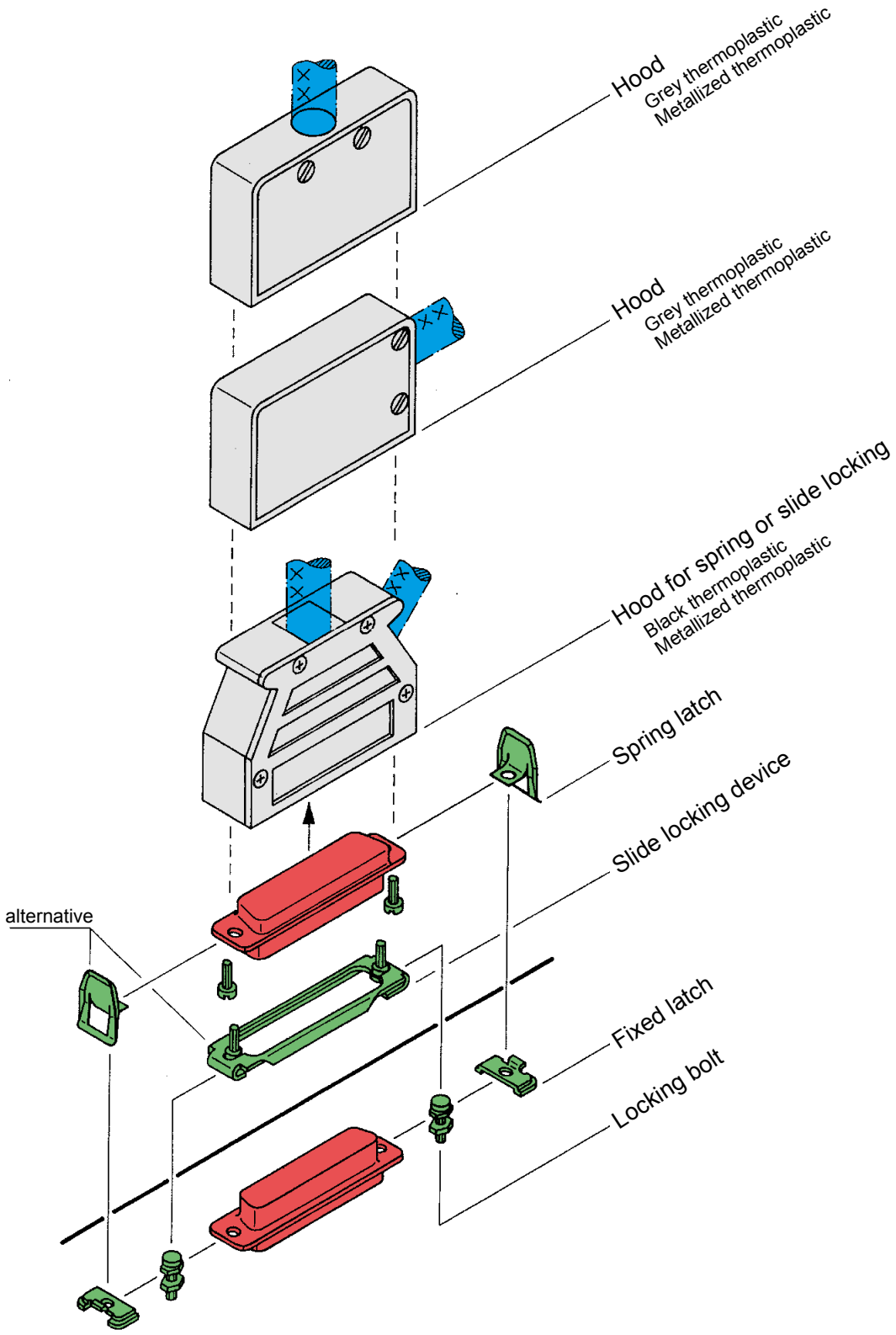

Thermoplastic top and side entry hoods for spring or slide locking

Identification	No. of contacts	Part number: Thermoplastic grey[2]	Part number: Thermoplastic metallized[3]
Top entry hood	9	09 67 009 0411	09 67 009 0413
	15	09 67 015 0411	09 67 015 0413
	25	09 67 025 0411	09 67 025 0413
	37	09 67 037 0411	09 67 037 0413
	50	09 67 050 0411	09 67 050 0413
9-37 way for packaging density of 3 TE (15.24 mm)			
Side entry hood	9	09 67 009 0511	09 67 009 0513
	15	09 67 015 0511	09 67 015 0513
	25	09 67 025 0511	09 67 025 0513
	37	09 67 037 0511	09 67 037 0513
	50	09 67 050 0511	09 67 050 0513
9-37 way for packaging density of 3 TE (15.24 mm)			
Top and side entry hood [1]	9	09 67 009 0452	09 67 009 0453
	15	09 67 015 0452	09 67 015 0453
	25	09 67 025 0452	09 67 025 0453
	37	09 67 037 0452	09 67 037 0453
	50	09 67 050 0452	09 67 050 0453

[1] 9-poles is only side entry

Drawing — Dimensions in mm

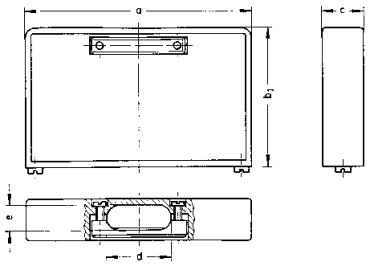

	a	b_1	b_2	c	d	e min.	e max.
9	31.0	23	28	12.8	10	5.75	9.0
15	39.4	28	28	12.8	10	5.75	9.0
25	53.3	34	34	12.8	14	5.75	9.0
37	69.7	43	43	12.8	20	5.75	9.0
50	67.1	41	41	15.8	20	5.75	11.6

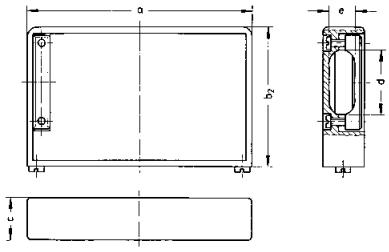

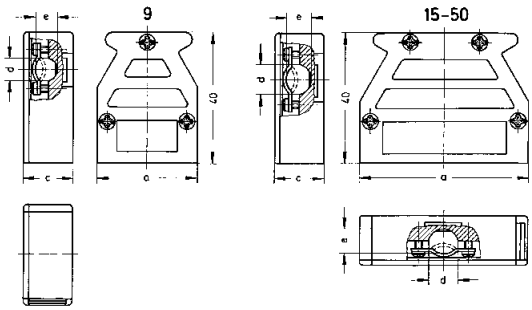

	a	c	d	e min.	e max.
9	31.0	15.4	7	1.7	7.5
15	39.4	15.4	7	1.7	8.0
25	53.2	15.4	9	1.5	8.0
37	69.5	15.4	9	1.5	8.0
50	67.0	17.9	9	1.5	8.0

[2] Operating temperature: -55 °C … +120 °C
[3] Operating temperature: -35 °C … +60 °C
[4] Operating temperature: -20 °C … +90 °C

Accessories see page 05.159

Full metal top and side entry hoods for spring or slide locking

Identification	No. of contacts	Part number
Top/side entry hood with spring/slide locking	9	61 03 001 0022[1)]
	15	61 03 001 0011[2)]
	25	61 03 001 0012[2)]
	37	61 03 001 0021[2)]
	50	61 03 001 0020[2)]

Drawing

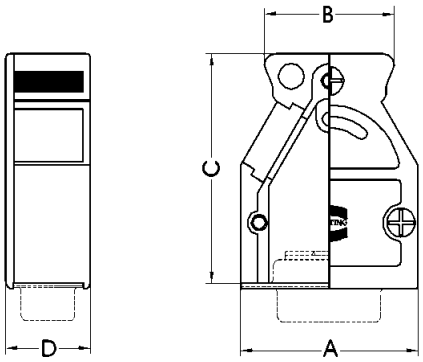

Dimensions in mm

No. of contacts	No. of cable entries	A	B	C	D
9	2	31.0	22.6	40.0	14.8
15	3	39.0	30.6	40.0	14.8
25	3	53.0	42.6	40.0	14.8
37	3	69.5	59.2	40.0	14.8
50	3	67.0	55.0	40.0	17.6

[1)] Part number contains one blanking piece
[2)] Part number contains two blanking pieces

Accessories see page 05.162

Accessories for spring or slide locking hoods

Identification	No. of contacts	Part number	Drawing	Dimensions in mm
Spring latch	9-50	corrosion resistant steel 09 67 000 9907[1]		
Fixed latch[2]	9-37 50	corrosion resistant steel 09 67 001 9971[1] 09 67 001 9972[1]		
Slide locking device	9 15 25 37 50	corrosion resistant steel 09 67 000 9914 09 67 000 9915 09 67 000 9916 09 67 000 9917 09 67 000 9918	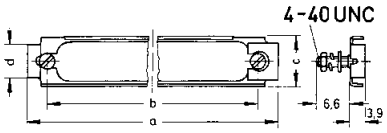	
Locking bolt	9-50	tinned 09 67 001 9973[1]	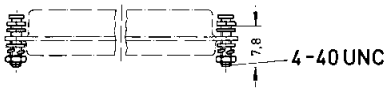	

	a	b	c	d
9	35.0	25.0	11.7	8.6
15	43.3	33.3	11.5	8.6
25	57.0	47.0	11.7	8.6
37	74.3	63.5	11.7	8.6
50	72.0	61.1	14.7	11.2

[1] Order 2 for each connector
[2] Screws are not supplied with a fixed latch

Accessories – coding system

Coding system

Example of application

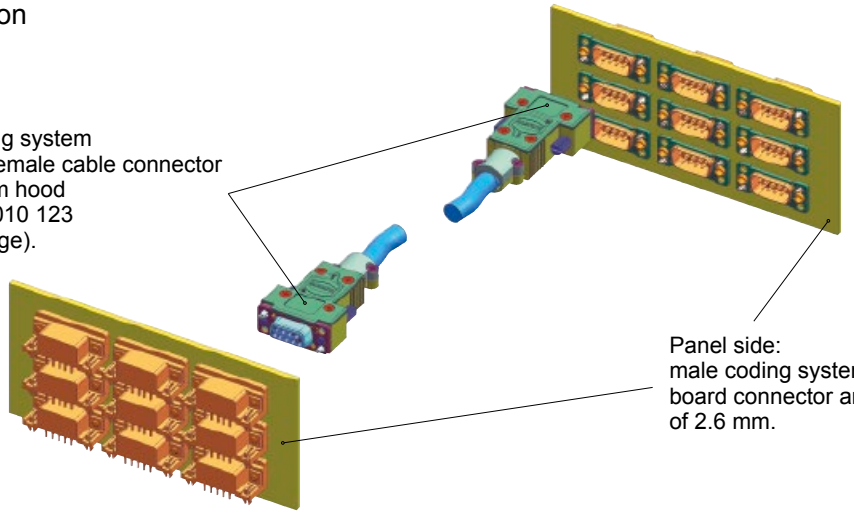

Exploded view panel side

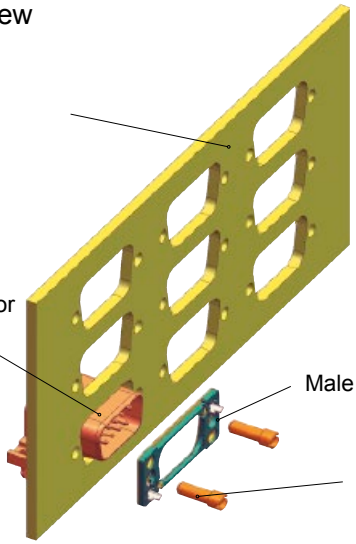

Exploded view cable side

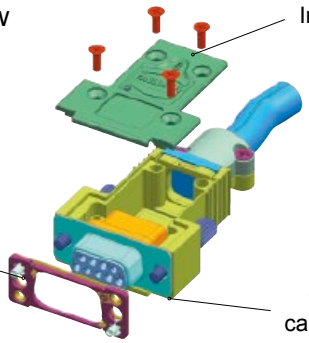

Coding key details

Before mating | Fully mated | Polarization case

Standard coding combinations

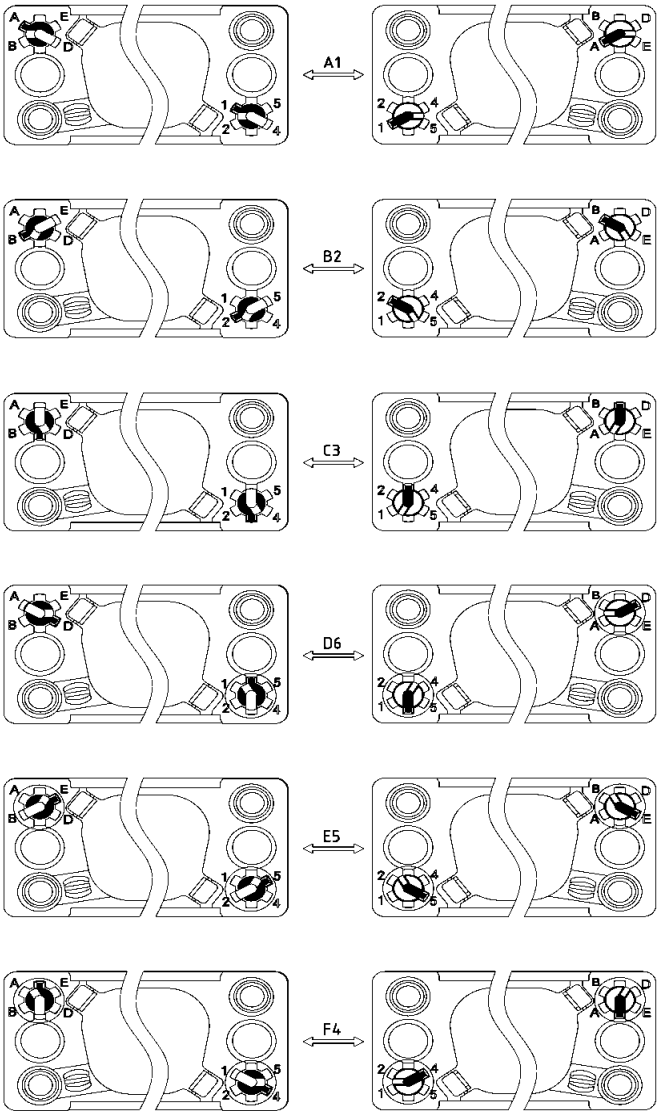

Accessories – coding system

Identification	Part number	Panel thickness	Dimensions in mm
Coding[1]			
Female	09 67 002 9121 xx 1	2.40 - 2.60 mm[3]	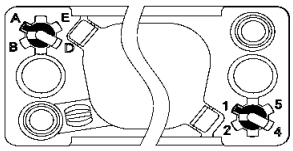
	09 67 002 9121 xx 2	2.00 - 2.40 mm	
	09 67 002 9121 xx 3	1.20 - 2.00 mm	
	09 67 002 9121 xx 4	0.80 - 1.20 mm	
Male	09 67 002 9122 xx 1	2.40 - 2.60 mm[3]	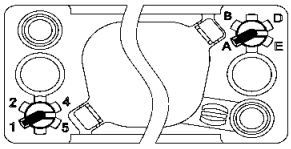
	09 67 002 9122 xx 2	2.00 - 2.40 mm	
	09 67 002 9122 xx 3	1.20 - 2.00 mm	
	09 67 002 9122 xx 4	0.80 - 1.20 mm	
Insert digits for coding configuration, e. g. "C3"		36 coding configurations[2]	

A1	B1	C1	D1	E1	F1
A2	**B2**	C2	D2	E2	F2
A3	B3	**C3**	D3	E3	F3
A4	B4	C4	D4	E4	**F4**
A5	B5	C5	D5	**E5**	F5
A6	B6	C6	**D6**	E6	F6

Depending on the panel thickness the suitable coding needs to be selected.

Female screw lock

for angled PCB connectors[3]

Thread inner	Thread outer	Part number	Panel thickness
4 - 40 UNC	4 - 40 UNC	09 67 002 9123[4]	2.00 - 2.60 mm
4 - 40 UNC	M3	09 67 002 9124	
M3	4 - 40 UNC	09 67 002 9125	
M3	M3	09 67 002 9126	
4 - 40 UNC	4 - 40 UNC	09 67 002 9129	1.20 - 2.00 mm
4 - 40 UNC	M3	09 67 002 9130	
M3	4 - 40 UNC	09 67 002 9131	
M3	M3	09 67 002 9132	
4 - 40 UNC	4 - 40 UNC	09 67 002 9133	0.80 - 1.20 mm
4 - 40 UNC	M3	09 67 002 9134	
M3	4 - 40 UNC	09 67 002 9135	
M3	M3	09 67 002 9136	

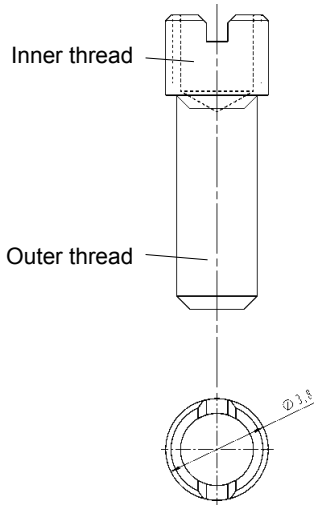

9 pole InduCom top entry hood for coding

61 03 001 . 010 123

Please insert digit for screw option

Hexagonal screw, thread M3 with captive washer ▶ 1

Hexagonal screw, thread 4-40 UNC with captive washer ▶ 2

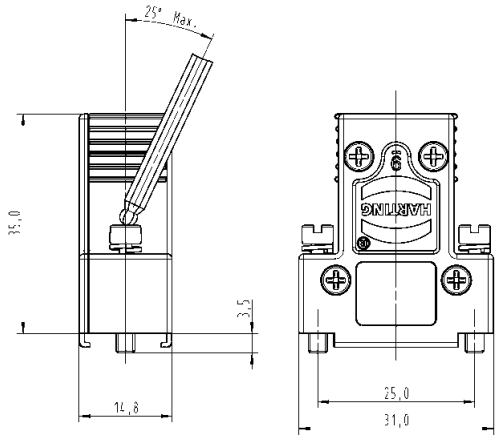

[1] MOQ = 50 pieces
[2] Stock items (standard versions) in bold type
[3] Female screw lock for straight PCB connectors on request
[4] Standard versions

Accessories for full metal hoods

Identification	Part number: for 9-37-pole D-Sub	Part number: for 50-pole D-Sub
Cable clamp		
Cable-Ø appr. 5- 7 mm	61 03 000 0141	
Cable-Ø appr. 7-10 mm	61 03 000 0044	
Cable-Ø appr. 9-12 mm	61 03 000 0143	
Cable-Ø appr. 11-14 mm	61 03 000 0148	61 03 000 0145
Cable-Ø appr. 14-16 mm		61 03 000 0147

Drawing

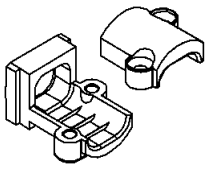

Dimensions in mm

Identification	Part number: for 9-37-pole D-Sub	Part number: for 50-pole D-Sub	D1	D2
Crimp flange				
	61 03 000 0062	61 03 000 5062	3.0	4.0
	61 03 000 0063	61 03 000 5063	3.5	4.5
	61 03 000 0064	61 03 000 5064	4.0	5.0
	61 03 000 0065	61 03 000 5065	4.5	5.5
	61 03 000 0066	61 03 000 5066	5.0	6.0
	61 03 000 0166	61 03 000 5166	5.5	6.5
	61 03 000 0067	61 03 000 5067	6.0	7.0
	61 03 000 0068	61 03 000 5068	6.5	7.5
	61 03 000 0069	61 03 000 5069	7.0	8.0
	61 03 000 0070	61 03 000 5070	7.5	8.5
	61 03 000 0071	61 03 000 5071	8.0	9.0
	61 03 000 0165	61 03 000 5165	8.5	9.5
	61 03 000 0072	61 03 000 5072	9.0	10.0

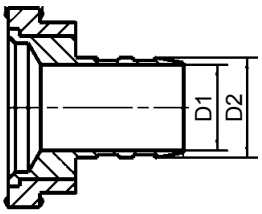

Identification	Part number	D3	D4
Crimp ferrule			
	61 03 000 0045	5.0	6.0
	61 03 000 0046	5.5	6.5
	61 03 000 0047	6.0	7.0
	61 03 000 0048	6.5	7.5
	61 03 000 0049	7.0	8.0
	61 03 000 0050	7.5	8.5
	61 03 000 0051	8.0	9.0
	61 03 000 0052	8.5	9.5
	61 03 000 0053	9.0	10.0
	61 03 000 0054	9.5	10.5
	61 03 000 0055	10.0	11.0
	61 03 000 0056	10.5	11.5
	61 03 000 0057	11.0	12.0
	61 03 000 0058	11.5	12.5
	61 03 000 0142	12.0	13.0
	61 03 000 0059	12.5	13.5
	61 03 000 0127	13.0	14.0
	61 03 000 0060	13.7	15.0
	61 03 000 0061	14.0	15.0

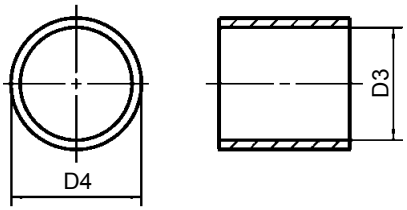

Identification	Part number: for 9-37-pole D-Sub	Part number: for 50-pole D-Sub
Blanking piece for hoods	61 03 000 0042	61 03 000 0041
Hexagonal screw thread 4-40 UNC x 17.5-8.8 with captive washer	09 67 002 9020	
Hexagonal screw thread M3 x 17.5-8.8 with captive washer	09 67 002 9019	
Knurled screw thread 4-40 UNC	09 67 002 9018	
Knurled screw thread M3	09 67 002 9017	

Tooling see chapter 20
Operating temperature for all components on this page: -20 °C … +90 °C

Crimp flange termination instruction

1. Strip the cable sheath to the correct length (approx. 35 to 40 mm, depending on interface type).

2. Place the crimp ferrule over the cable sheath. Bend the outer screen backwards over the cable sheath. Cut screen approx. 2 mm from the end of the cable sheath.

3. Place the crimp flange over the wires covered by the remaining foil shield. Push and twist the crimp flange under the outer screen and cable sheath until the end of the cable sheath touches the crimp flange. HARTING has developed a special tool for optimised installation of the shielding over the crimp flange, part number 61 03 600 0017.

4. Move the crimp ferrule back onto the crimp flange and crimp the two parts together with the special service crimp tool part number 61 03 600 0020. For an optimised crimp process the tool should to be positioned as close as possible to the crimp flange sholder.

5. Cut off the internal screen foil and push the crimp flange inside the metal hood.

HARTING offers to test and define the best crimp flange and ferrule combination for customer specific cables.

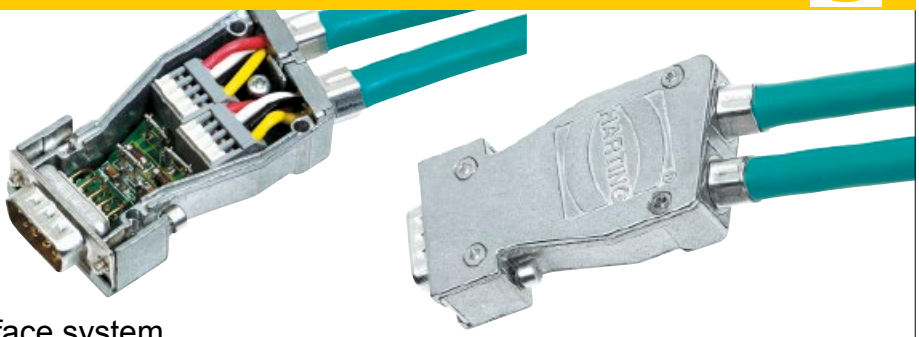

InduCom 9 – Industrial bus interface system

Identification	Part number	General information
MVB Interface 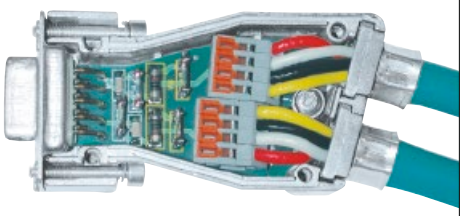 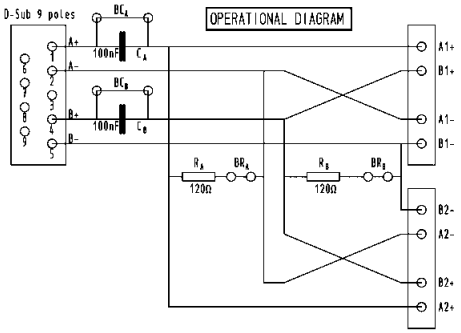 	66 63 009 5013	**MVB backbone interface set** The Multifunctional Vehicle Bus (MVB) backbone interface is specially designed for communication cables in Train Control Networks (TCN). With this interface it is possible to realise a T-bus structure with MVB-cable with which you can disconnect the bus interface from the control unit without any interruption of the complete bus communication. On the PCB you will have load resistors and test capacitors which can be activated with solder bridges. The wires are terminated with the proven vibration resistant cage clamp technology.* **Components of the MVB interface set:** • 1 metal housing with 2 cable entries • 2 hexagonal screws with UNC 4-40 threads • 1 PCB with 9 way D-Sub male connector and cage clamps • 2 crimp flanges for the MVB cable • 2 crimp ferrules for the MVB cable • 1 blanking piece
WTB Interface 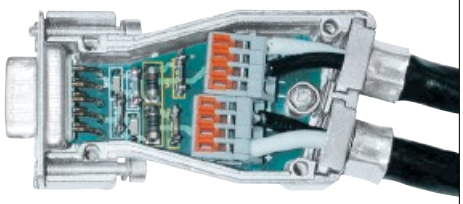 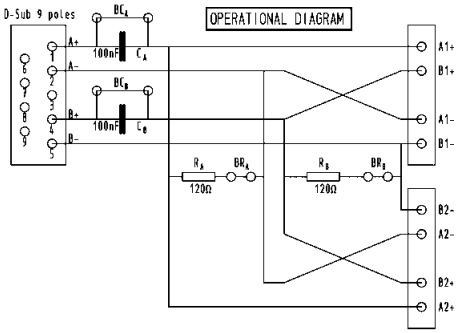 	66 63 009 5014	**WTB backbone interface set** The Wired Train Bus (WTB) backbone interface is specially designed for backbone cables in Train Control Networks (TCN). With this interface it is possible to realise a T-bus structure with WTB-cable with which you can disconnect the bus interface from the control unit without any interruption of the complete bus communication. On the PCB you will have load resistors and test capacitors which can be activated with solder bridges. The wires are terminated with the proven vibration resistant cage clamp technology.* **Components of the MVB interface set:** • 1 metal housing with 2 cable entries • 2 hexagonal screws with UNC 4-40 threads • 1 PCB with 9 way D-Sub male connector and cage clamps • 2 crimp flanges for the WTB cable • 2 crimp ferrules for the WTB cable • 1 blanking piece

Further bus PCBs on request

* To check compatibility with cable types and manufacturers, please contact your local HARTING representative.

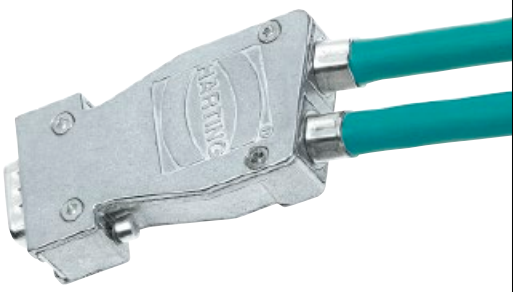

InduCom 9 – Industrial bus interface system

Identification	Part number	General information
CAN Interface 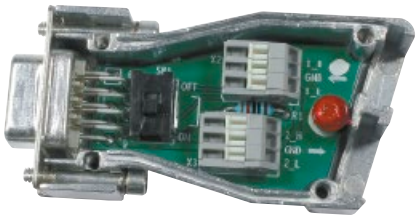 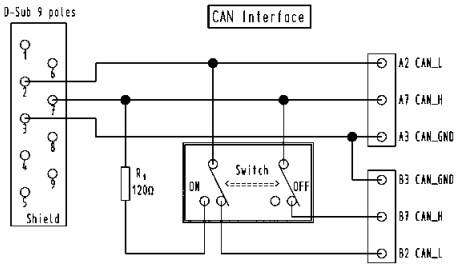 	66 63 009 6016	The Controller Area Network (CAN)-Interface is specially designed for usage in trains. With this interface it is possible to realise a T-bus structure with which you can disconnect the bus interface from the control unit without any interruption of the complete bus communication. On the PCB you will have a load resistor which can be activated with the switch.* **Components of the interface set:** • 1 metal housing with 2 cable entries • 2 hexagonal screws with UNC 4-40 threads • 1 PCB with 9 way D-Sub female connector and 2 cage clamps • 1 blanking piece • 2 crimp flanges • 2 crimp ferrules
Profibus Interface 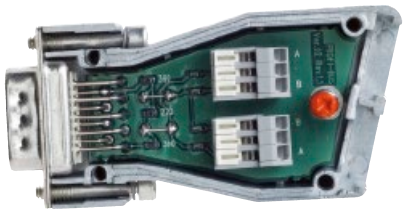 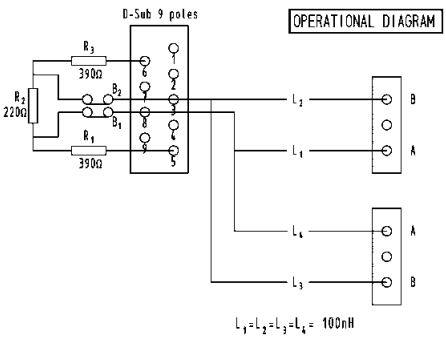 	66 63 009 6004	The Profibus Interface is specially designed for usage in trains and in challenging engineering applications. On the PCB you will have SMD parts which can be activated with solder bridges. The wires are assembled with the proven vibration resistant cage clamp technology.* **Components of the interface set:** • 1 metal housing with 2 cable entries • 2 hexagonal screws with UNC 4-40 threads • 1 PCB with 9 way D-Sub female connector and 2 cage clamps • 1 blanking piece

Further bus PCBs on request

* To check compatibility with cable types and manufacturers, please contact your local HARTING representative.

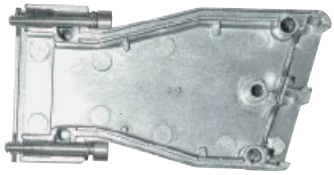

InduCom 9 – Industrial bus interface system

Identification	Part number	General information
FIP Interface middle of the line 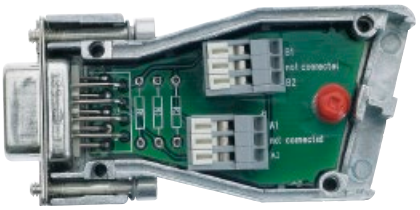 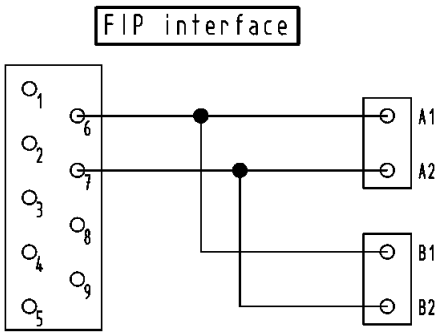 	66 63 009 5017	The FIP (Factory Installation Protocol) Interface is specially designed for applications in trains. It is connected via the D-Sub. The wires are assembled with the proven vibration resistant cage clamp technology.* **Components of the interface set:** • 1 metal housing with 2 cable entries • 2 hexagonal screws with UNC 4-40 threads • 1 pcb with 9 way D-Sub female connector and cage clamps
FIP Interface end of the line 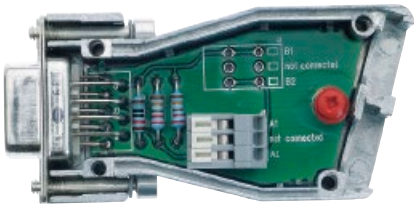 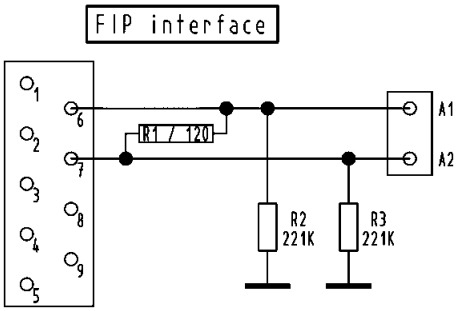 	66 63 009 5018	The FIP (Factory Installation Protocol) Interface is specially designed for applications in trains. It is connected via the D-Sub. On the pcb you will have load resistors. The wires are assembled with the proven vibration resistant cage clamp technology.* **Components of the interface set:** • 1 metal housing with 2 cable entries • 2 hexagonal screws with UNC 4-40 threads • 1 pcb with 9 way D-Sub female connector and cage clamps • 1 blanking piece

Further bus PCBs on request

* To check compatibility with cable types and manufacturers, please contact your local HARTING representative.

Accessories

Identification	No. of contacts	Part number	Drawing	Dimensions in mm
Female screw locks without nut				
Thread UNC/UNC	9-50	09 67 000 9972[1)]	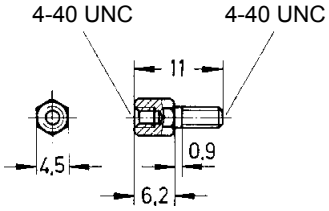	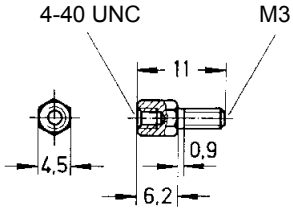
Thread UNC/M3	9-50	09 67 000 9974[1)]		
Thread M3/UNC	9-50	09 67 001 9976[1)]	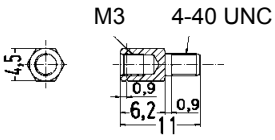	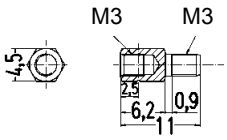
Thread M3/M3	9-50	09 67 001 9974[1)]		
Thread UNC/UNC	9-50	09 67 001 9941[1)]	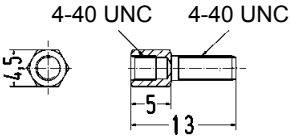	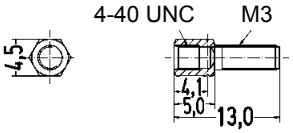
Thread UNC/M3	9-50	09 67 001 9954[1)]		
for press-in connectors with grounding-pins or straight solder with grounding-clips.				
Thread UNC/UNC	9-50	09 66 000 9972[1)]	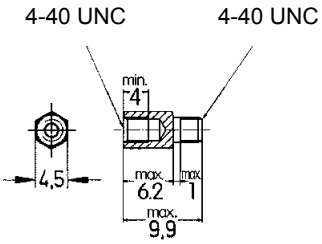	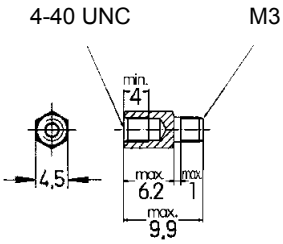
Thread UNC/M3	9-50	09 66 000 9974[1)2)]		
with captive washer				
Thread UNC/UNC	9-50	09 67 001 9957[1)]	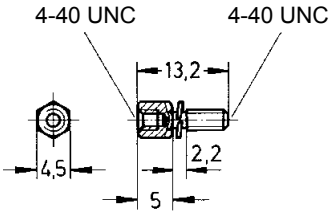	

[1)] Order 2 for each connector
[2)] M3 inner thread available on request

Accessories

Identification	No. of contacts	Part number	Drawing	Dimensions in mm
Female screw locks with nut Thread UNC/UNC Thread UNC/M3	9-50 9-50	09 67 000 9922[1)] 09 67 000 9924[1)]	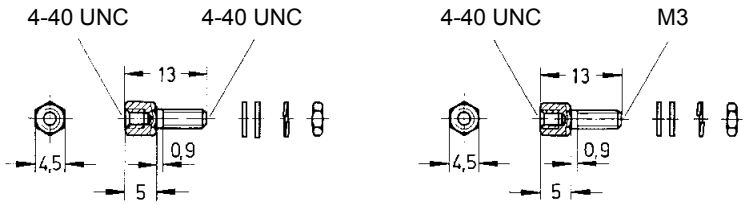	
Thread UNC/UNC	9-50	09 67 000 9973[1)]	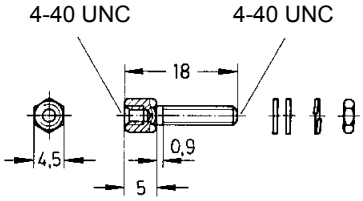	
Male screw locks for use without hood	9-37 50	09 67 001 9969[1)] 09 67 001 9970[1)]	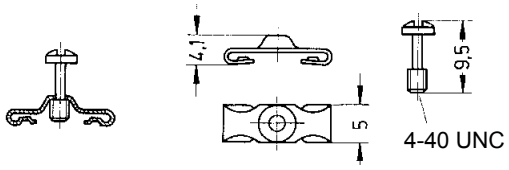	
Hex extender Thread 4-40 UNC Thread M3	9-50 9-50	09 67 001 9985 09 67 002 9120	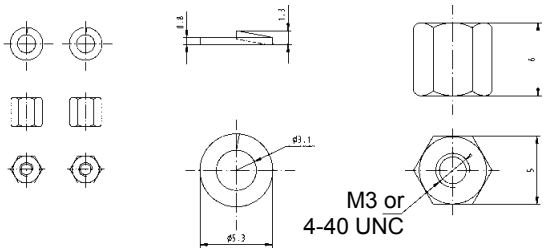	
U-Clip with thread 4-40 UNC	9-50	09 67 001 9928[1)]	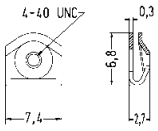	
with thread 4-40 UNC and screw-lock	9-50	09 67 002 9030[1)]	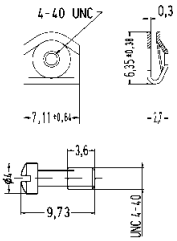	

[1)] Order 2 for each connector

Accessories

Identification	No. of contacts	Part number	Drawing	Dimensions in mm
Dust cap black thermoplastic				
for male connector	9 15 25 37	09 67 009 0611 09 67 015 0611 09 67 025 0611 09 67 037 0611	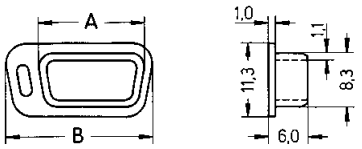	
for female connector	9 15 25 37	09 67 009 0711 09 67 015 0711 09 67 025 0711 09 67 037 0711	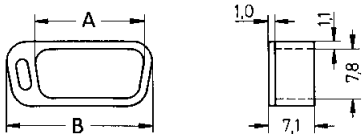	
anstistatic black thermoplastic				
for male connector	9 15 25 37 50	09 67 009 0612 09 67 015 0612 09 67 025 0612 09 67 037 0612 09 67 050 0612	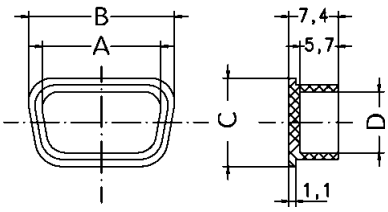	
for female connector	9 15 25 37 50	09 67 009 0712 09 67 015 0712 09 67 025 0712 09 67 037 0712 09 67 050 0712	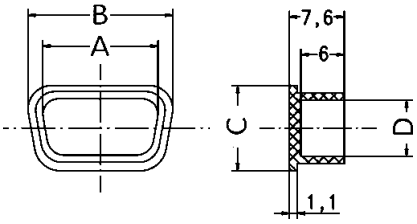	
UL 94 V0 grey thermoplastic				
for male connector	9 15 25 37 50	09 67 009 0613 09 67 015 0613 09 67 025 0613 09 67 037 0613 09 67 050 0613	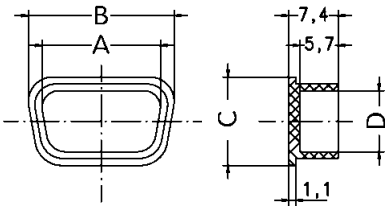	
for female connector	9 15 25 37 50	09 67 009 0713 09 67 015 0713 09 67 025 0713 09 67 037 0713 09 67 050 0713	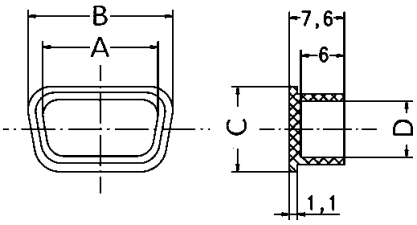	

	A	B
9	17.0	22.40
15	25.3	30.80
25	38.9	44.40
37	55.4	60.75

	A	B
9	16.0	22.5
15	24.4	31.0
25	37.8	44.3
37	54.3	60.8

	A	B	C	D
9	17.7	21.8	13.2	9.1
15	26.0	30.0	13.2	9.1
25	40.0	44.2	13.2	9.1
37	56.4	59.8	13.2	9.1
50	53.9	57.8	15.9	11.7

	A	B	C	D
9	15.9	20.0	11.8	7.8
15	24.4	28.5	11.8	7.8
25	38.3	42.3	11.8	7.8
37	54.7	58.8	11.8	7.8
50	52.6	56.2	14.5	10.5

	A	B	C	D
9	17.7	21.8	13.2	9.1
15	26.0	30.0	13.2	9.1
25	40.0	44.2	13.2	9.1
37	56.4	59.8	13.2	9.1
50	53.9	57.8	15.9	11.7

	A	B	C	D
9	15.9	20.0	11.8	7.8
15	24.4	28.5	11.8	7.8
25	38.3	42.3	11.8	7.8
37	54.7	58.8	11.8	7.8
50	52.6	56.2	14.5	10.5

Accessories

Identification	No. of contacts	Part number	Drawing	Dimensions in mm
Dust cap metallized thermoplastic				
for male connector	9 15 25 37 50	09 67 009 0614 09 67 015 0614 09 67 025 0614 09 67 037 0614 09 67 050 0614	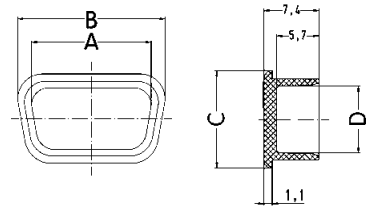	
for female connector	9 15 25 37 50	09 67 009 0714 09 67 015 0714 09 67 025 0714 09 67 037 0714 09 67 050 0714	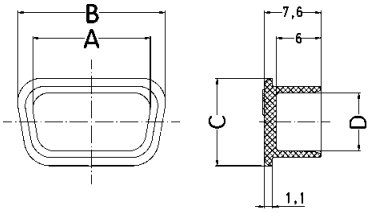	
metallized thermoplastic with chain				
for male connector	9 15 25 37 50	09 67 009 0615 09 67 015 0615 09 67 025 0615 09 67 037 0615 09 67 050 0615	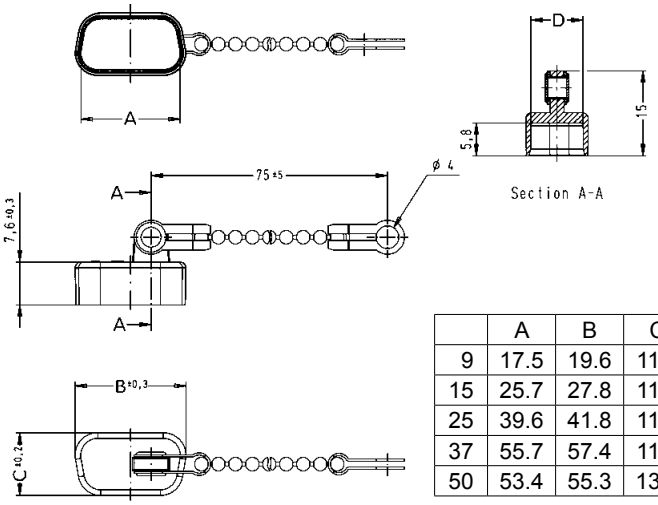	
for female connector	9 15 25 37 50	09 67 009 0715 09 67 015 0715 09 67 025 0715 09 67 037 0715 09 67 050 0715	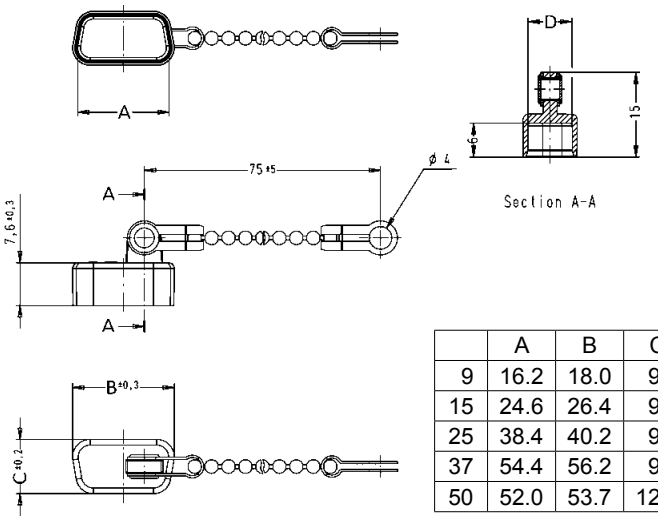	

	A	B	C	D
9	17.7	21.8	13.2	9.1
15	26.0	30.0	13.2	9.1
25	40.0	44.2	13.2	9.1
37	56.4	59.8	13.2	9.1
50	53.9	57.8	15.9	11.7

	A	B	C	D
9	15.9	20.0	11.8	7.8
15	24.4	28.5	11.8	7.8
25	38.3	42.3	11.8	7.8
37	54.7	58.8	11.8	7.8
50	52.6	56.2	14.5	10.5

	A	B	C	D
9	17.5	19.6	11.1	9.2
15	25.7	27.8	11.1	9.2
25	39.6	41.8	11.1	9.2
37	55.7	57.4	11.1	9.2
50	53.4	55.3	13.8	11.9

	A	B	C	D
9	16.2	18.0	9.6	7.8
15	24.6	26.4	9.6	7.8
25	38.4	40.2	9.6	7.8
37	54.4	56.2	9.6	7.8
50	52.0	53.7	12.2	10.4

Number of contacts	9, 15, 25, 37, 50 UL recognized
Working current see current carrying capacity chart Stamped contacts	 6.5 A max.
Test voltage $U_{r.m.s.}$	1 kV
Clearance and creepage	≥ 1.0 mm
Contact resistance Insulation resistance	≤ 10 mΩ ≥ 10^{10} Ω
Temperature range The higher temperature limit includes the local ambient and heating effect of the contacts under load	-55 °C … +125 °C

Terminations

Recommended PCB through holes

		Signal pin	Grounding pin
Tin-lead plated PCB	Hole	$1.15^{-0.03}$	$3.15^{\pm 0.025}$
	Cu	25-75 µm	25-75 µm
	Sn	5-15 µm	4-10 µm
	Plated hole	0.94-1.09 mm	3.0-3.15 mm
Chemical tin-plated PCB	Hole	$1.05^{-0.03}$	$3.15^{\pm 0.025}$
	Cu	25-50 µm	25-50 µm
	Sn	0.8-1.0 µm	0.8-1.0 µm
	Plated hole	1.00-1.10 mm	3.0-3.15 mm
Au / Ni plated PCB	Hole	$1.15^{-0.03}$	$3.15^{\pm 0.025}$
	Cu	25-50 µm	25-50 µm
	Ni	3-7 µm	4-7 µm
	Au	0.05-0.12 µm	0.05-0.12 µm
	Plated hole	1.00-1.10 mm	3.0-3.15 mm
Silver plated PCB	Hole	$1.15^{-0.03}$	$3.15^{\pm 0.025}$
	Cu	25-50 µm	25-50 µm
	Ag	0.1-0.3 µm	0.1-0.3 µm
	Plated hole	1.00-1.10 mm	3.0-3.15 mm
OSP copper plated PCB	Hole	$1.15^{-0.03}$	$3.15^{\pm 0.025}$
	Cu	25-50 µm	25-50 µm
	Plated hole	1.00-1.10 mm	3.0-3.15 mm

PCB board thickness: ≥ 1.6 mm

Materials

Mouldings and hoods	Liquid Crystal Polymer (LCP) UL 94-V0
Contacts	Copper alloy

Contact surface

Contact zone	selectively plated acc. to performance level[1)]
Metal shell	Plated steel

Insertion and withdrawal force

Connector on P.C.B.

Press-in without grounding pins
- insertion max. per contact: 120 N
- withdrawal min. per contact: 20 N

Press-in with grounding pins
- insertion max. per grounding pin: 250 N
- withdrawal min. per grounding pin: 30 N

Mating force

9 way	≤ 30 N
15 way	≤ 50 N
25 way	≤ 83 N
37 way	≤ 123 N
50 way	≤ 167 N

Current carrying capacity

The current carrying capacity is limited by maximum temperature of materials for inserts and contacts including terminals.

The current capacity-curve is valid for continuous, not interrupted current-loaded contacts of connectors when simultaneous power on all contacts is given, without exceeding the maximum temperature.

Control and test procedures according to DIN IEC 60 512.

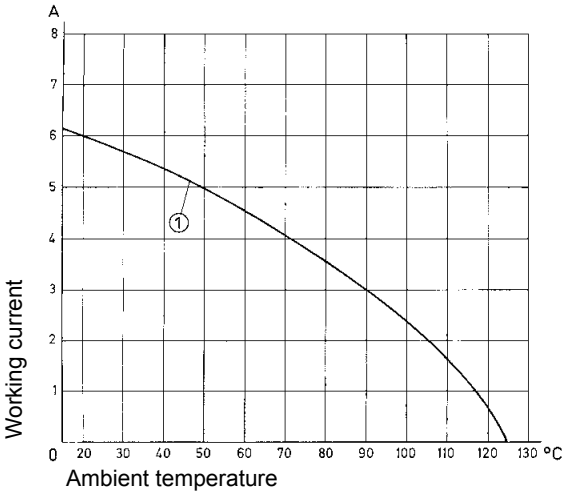

Example: 25 way connector

① Stamped contacts

Contact arrangement View from termination side

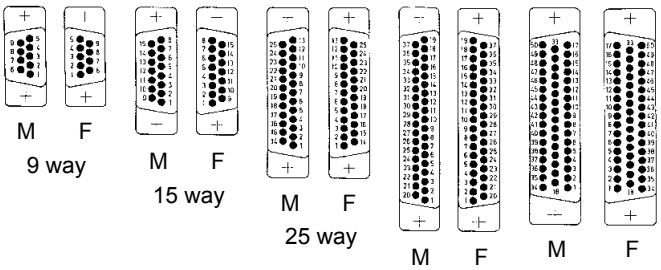

M = Male connector
F = Female connector

Mating conditions as per DIN 41 652

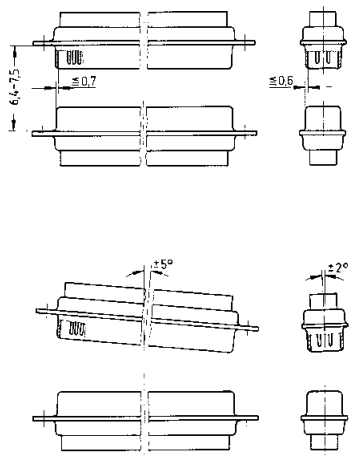

[1)] Performance level 3, 50 mating cycles, no gas test
Performance level 2 as per CECC 75 301-802, 250 mating cycles, 4 days 4 mixed gas test – IEC 60 512
Performance level 1 as per CECC 75 301-802, 500 mating cycles, 10 days 4 mixed gas test – IEC 60 512

Number of contacts

9–50

Press-in, straight with grounding press-in board locks

Identification	No. of contacts	Part number	
Performance levels Explanations see page 05.171 Other performance levels on request ▶		Performance level 3	Performance level 2
Male connector Flange height x = 5.7 mm			
metal shell with dimples	9	09 66 164 771 .	09 66 164 671 .
	15	09 66 264 771 .	09 66 264 671 .
	25	09 66 364 771 .	09 66 364 671 .
Please insert digit for flange thread or fitted female screw locks			
M3 ▶ 5			
4-40 UNC ▶ 6			
fitted screw locks 4-40 UNC ▶ 7[1)]			
Female connector Flange height x = 5.7 mm			
metal shell	9	09 66 154 751 .	09 66 154 651 .
	15	09 66 254 751 .	09 66 254 651 .
	25	09 66 354 751 .	09 66 354 651 .
	37	09 66 454 751 .	09 66 454 651 .
Please insert digit for flange thread or fitted female screw locks			
M3 ▶ 5			
4-40 UNC ▶ 6			
fitted screw locks 4-40 UNC ▶ 7[1)]			
Female connector Flange height x = 6 mm			
metal shell	9	09 66 154 751 .	09 66 154 651 .
	15	09 66 254 751 .	09 66 254 651 .
	25	09 66 354 751 .	09 66 354 651 .
	37	09 66 454 751 .	09 66 454 651 .
	50	09 66 554 751 .	09 66 554 651 .
Please insert digit for flange thread or fitted female screw locks			
M3 ▶ 1			
4-40 UNC ▶ 2			
fitted screw locks 4-40 UNC ▶ 3[1)]			

[1)] Fitted screw locks 4-40 UNC not normally kept in stock for performance level 3
Connector dimensions see page 05.173. Mating conditions see page 05.171.

Number of contacts

9–50

Press-in, straight with grounding press-in board locks

Identification	Drawing	Dimensions in mm

Male connector
9 – 25 contacts

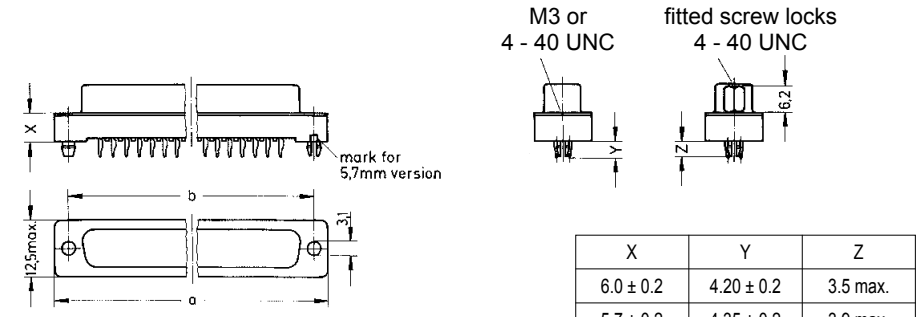

X	Y	Z
6.0 ± 0.2	4.20 ± 0.2	3.5 max.
5.7 ± 0.2	4.35 ± 0.2	3.9 max.

Female connector
9 – 37 contacts

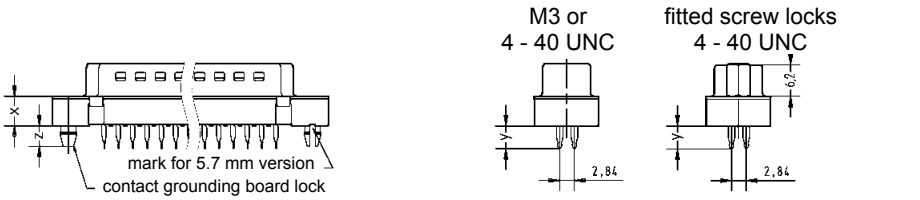

Mating face acc. to: DIN 41 652 · CECC 75 301-802 · IEC 60 807

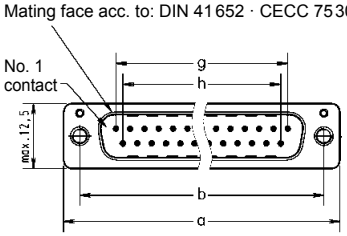

	a	b	g	h
9	31.00	24.90	4 x 2.74 = 10.96	3 x 2.74 = 8.22
15	39.30	33.20	7 x 2.74 = 19.18	6 x 2.74 = 16.44
25	53.10	47.00	12 x 2.76 = 33.12	11 x 2.76 = 30.36
37	69.65	63.55	18 x 2.76 = 49.68	17 x 2.76 = 46.92
50	67.00	61.10	16 x 2.76 = 44.16	15 x 2.76 = 41.40

Female connector
50 contacts

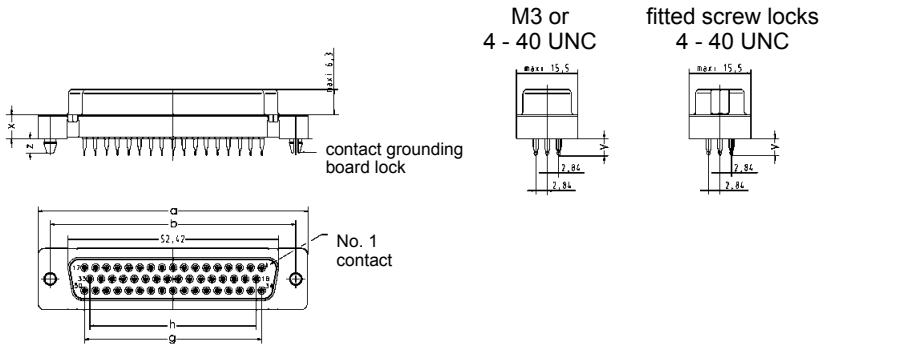

Board drillings

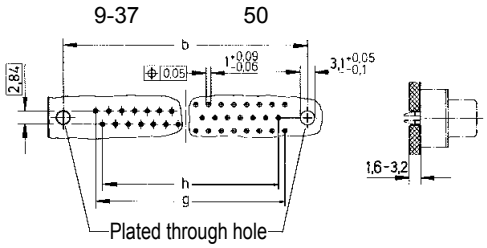

Number of contacts

9–50

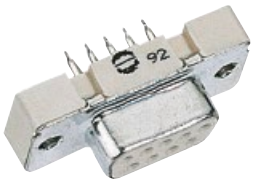

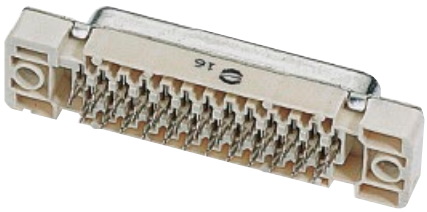

Press-in, straight without grounding press-in board locks

Identification	No. of contacts	Part number	
Performance levels ▶ Explanations see page 05.171 Other performance levels on request		Performance level 3	Performance level 2
Male connector			
Flange height x = 5.7 mm			
metal shell with dimples	9	09 66 124 770 .	09 66 124 670 .
	15	09 66 224 770 .	09 66 224 670 .
	25	09 66 324 770 .	09 66 324 670 .
Please insert digit for flange thread or fitted female screw locks			
ø 3.1 mm hole ▶ 4[1]			
M3 ▶ 5			
4-40 UNC ▶ 6			
fitted screw locks 4-40 UNC ▶ 7[2]			
Female connector			
Flange height x = 5.7 mm			
metal shell	9	09 66 114 750 .	09 66 114 650 .
	15	09 66 214 750 .	09 66 214 650 .
	25	09 66 314 750 .	09 66 314 650 .
	37	09 66 414 750 .	09 66 414 650 .
Please insert digit for flange thread or fitted female screw locks			
ø 3.1 mm hole ▶ 4[1]			
M3 ▶ 5			
4-40 UNC ▶ 6			
fitted screw locks 4-40 UNC ▶ 7[2]			
Female connector			
Flange height x = 6 mm			
metal shell	9	09 66 114 750 .	09 66 114 650 .
	15	09 66 214 750 .	09 66 214 650 .
	25	09 66 314 750 .	09 66 314 650 .
	37	09 66 414 750 .	09 66 414 650 .
	50	09 66 514 750 .	09 66 514 650 .
Please insert digit for flange thread or fitted female screw locks			
ø 3.1 mm hole ▶ 0[1]			
M3 ▶ 1			
4-40 UNC ▶ 2			
fitted screw locks 4-40 UNC ▶ 3[2]			

[1] Not normally kept in stock
[2] Fitted screw locks 4-40 UNC not normally kept in stock for performance level 3
Connector dimensions see page 05.175. Mating conditions see page 05.171.

Number of contacts

9–50

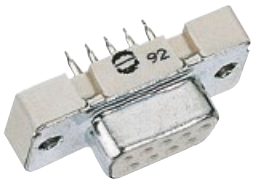

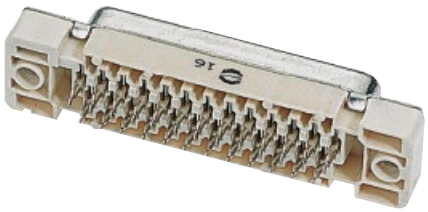

Press-in, straight without grounding press-in board locks

Identification	Drawing	Dimensions in mm

Male connector
9 – 25 contacts

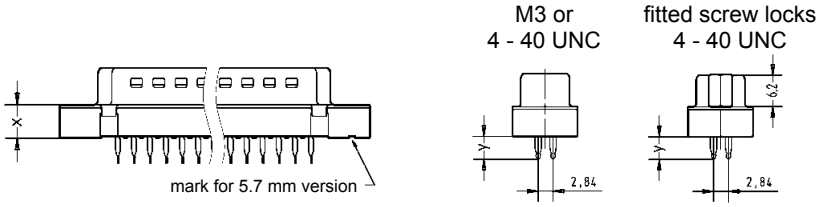

Mating face acc. to: DIN 41 652 · CECC 75 301-802 · IEC 60 807

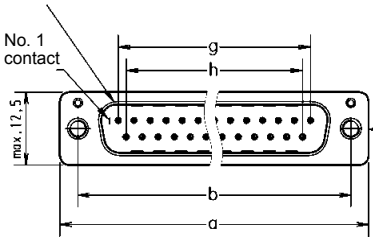

X	Y
6.0 ± 0.2	4.20 ± 0.2
5.7 ± 0.2	4.35 ± 0.2

Female connector
9 – 37 contacts

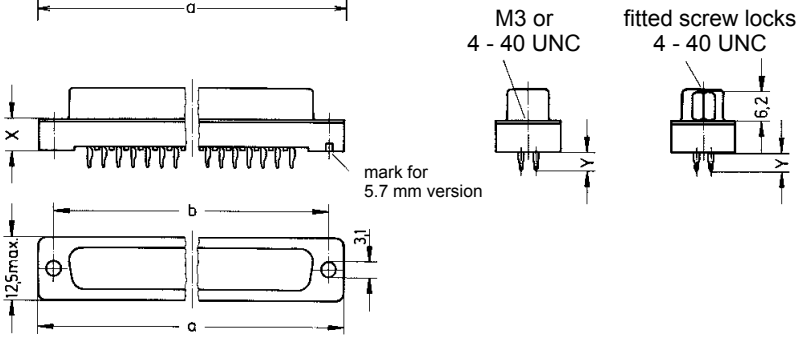

Female connector
50 contacts

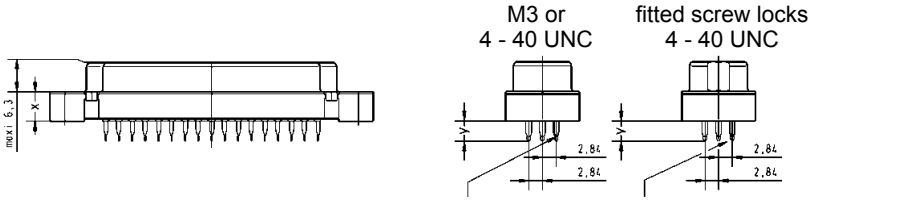

Press-in pins from position 34 to 50 are reversed 180 degrees

Mating face acc. to: DIN 41 652 · CECC 75 301-802 · IEC 60 807

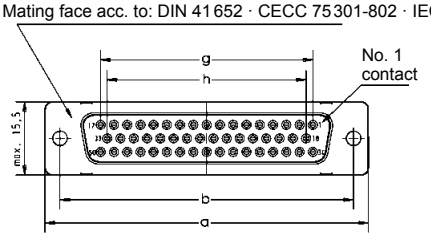

	a	b	g	h
9	31.00	24.90	4 x 2.74 = 10.96	3 x 2.74 = 8.22
15	39.30	33.20	7 x 2.74 = 19.18	6 x 2.74 = 16.44
25	53.10	47.00	12 x 2.76 = 33.12	11 x 2.76 = 30.36
37	69.65	63.55	18 x 2.76 = 49.68	17 x 2.76 = 46.92
50	67.00	61.10	16 x 2.76 = 44.16	15 x 2.76 = 41.40

Board drillings

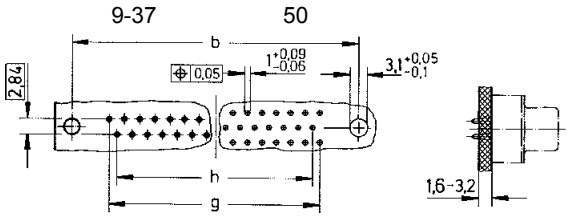

Number of contacts	9, 15, 25, 37 UL recognized
Working current see current carrying capacity chart Stamped contacts	 6.5 A max.
Test voltage $U_{r.m.s.}$	1 kV
Clearance and creepage	≥ 1.0 mm
Contact resistance Insulation resistance	≤ 10 mΩ ≥ 10^{10} Ω
Temperature range during reflow soldering	-55 °C … +125 °C max. + 240 °C for 15 s

The higher temperature limit includes the local ambient and heating effect of the contacts under load. All connectors are suitable for standard reflow processes.

Terminations	a) Solder pins Ø 0.6 mm for P.C.B. holes Ø 0.8/1 mm b) Solder pins, angled 90° Ø 0.6 mm for P.C.B. holes Ø 1 mm
Materials Mouldings	 Thermoplastic resin, glass-fibre filled (PCT), UL 94-V0
Contacts	Copper alloy
Contact surface Contact zone	 selectively gold-plated according to performance level[1]
Metal shell	Plated steel

Insertion and withdrawal force

Connector on P.C.B.
Solder, straight with clips
– insertion max. per connector: 60 N
– withdrawal min. per connector: 10 N

Mating force

9 way	≤ 30 N
15 way	≤ 50 N
25 way	≤ 83 N
37 way	≤ 123 N

Current carrying capacity

The current carrying capacity is limited by maximum temperature of materials for inserts and contacts including terminals.

The current capacity-curve is valid for continuous, not interrupted current-loaded contacts of connectors when simultaneous power on all contacts is given, without exceeding the maximum temperature.

Control and test procedures according to DIN IEC 60 512.

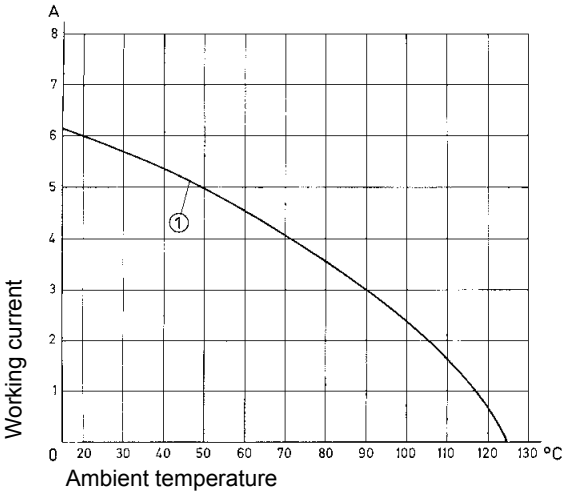

Example: 25 way connector
① Stamped contacts

Contact arrangement View from termination side

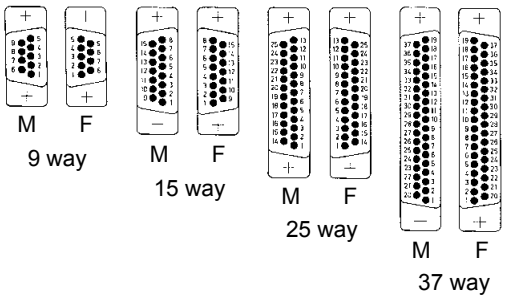

M = Male connector
F = Female connector

Mating conditions as per DIN 41 652

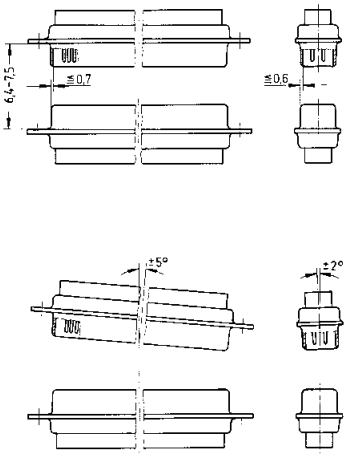

[1] Performance level 3, 50 mating cycles, no gas test
Performance level 2 as per CECC 75 301-802, 250 mating cycles, 4 days 4 mixed gas test – IEC 60 512
Performance level 1 as per CECC 75 301-802, 500 mating cycles, 10 days 4 mixed gas test – IEC 60 512

Identification	Drawing	Dimensions in mm

Standard Versions

Mounting height 7.3 mm

9-37 way
for front panel
4 units of width (TE)

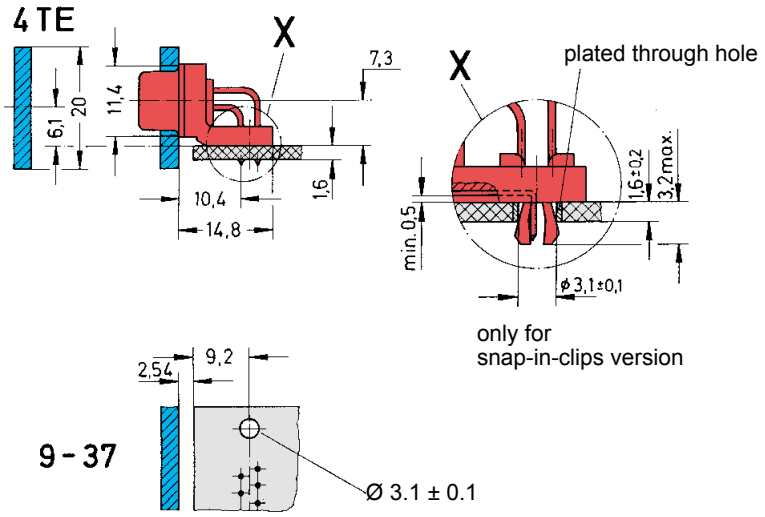

for connectors see pages 05.180 – 05.181

Low-Profile Versions

Mounting height 3.6 mm

9-37 way
for front panel
3 units of width (TE)

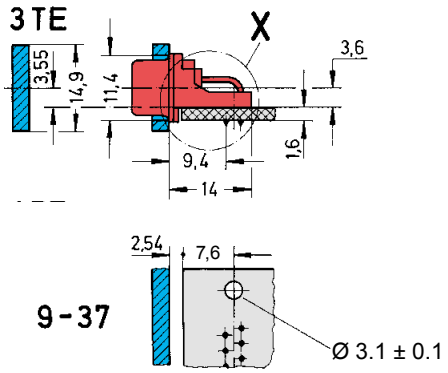

for connectors see pages 05.182 – 05.183

Panel cut out for front/rear mount

Values are taken from the CECC 75301-802

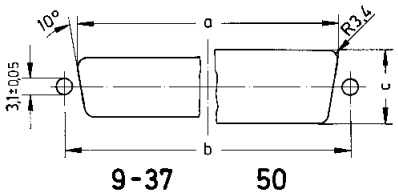

Front mount

	$a_{\pm 0.2}$	$b_{\pm 0.13}$	$c_{\pm 0.2}$
9	22.2	25.0	12.3
15	30.5	33.3	12.3
25	44.3	47.0	12.3
37	60.7	63.5	12.3
50	58.3	61.1	15.1

Rear mount

	$a_{\pm 0.2}$	$b_{\pm 0.13}$	$c_{\pm 0.2}$
9	20.5	25.0	11.4
15	28.8	33.3	11.4
25	42.5	47.0	11.4
37	59.1	63.5	11.4
50	56.3	61.1	14.1

Number of contacts

9–37

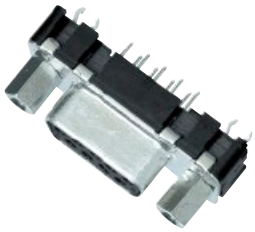

SMC stamped solder pins, straight with/without grounding board locks

Identification	No. of contacts	Part number	
Performance levels ▶ Explanations see page 05.176 Other performance levels on request		Performance level 3	Performance level 2
Male connector metal shell with dimples			
Without grounding board locks	9	09 65 129 770 .	09 65 129 670 .
	15	09 65 229 770 .	09 65 229 670 .
	25	09 65 329 770 .	09 65 329 670 .
	37	09 65 429 770 .	09 65 429 670 .
With grounding board locks	9	09 65 169 771 .	09 65 169 671 .
	15	09 65 269 771 .	09 65 269 671 .
	25	09 65 369 771 .	09 65 369 671 .
	37	09 65 469 771 .	09 65 469 671 .
Female connector metal shell			
Without grounding board locks	9	09 66 115 750 .	09 66 115 650 .
	15	09 66 215 750 .	09 66 215 650 .
	25	09 66 315 750 .	09 66 315 650 .
	37	09 66 415 750 .	09 66 415 650 .
With grounding board locks	9	09 66 155 751 .	09 66 155 651 .
	15	09 66 255 751 .	09 66 255 651 .
	25	09 66 355 751 .	09 66 355 651 .
	37	09 66 455 751 .	09 66 455 651 .
Please insert digit for flange thread or fitted female screw locks			
M3 ▶ 1			
4-40 UNC ▶ 2			
fitted screw locks 4-40 UNC ▶ 3[1]			

[1] Fitted screw locks 4-40 UNC not normally kept in stock for performance level 3

Connector dimensions see page 05.179. Mating conditions see page 05.176.

Number of contacts

9–37

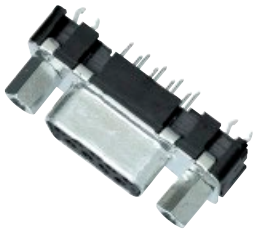

SMC stamped solder pins, straight with/without grounding board locks

Identification	Drawing	Dimensions in mm

Male connector

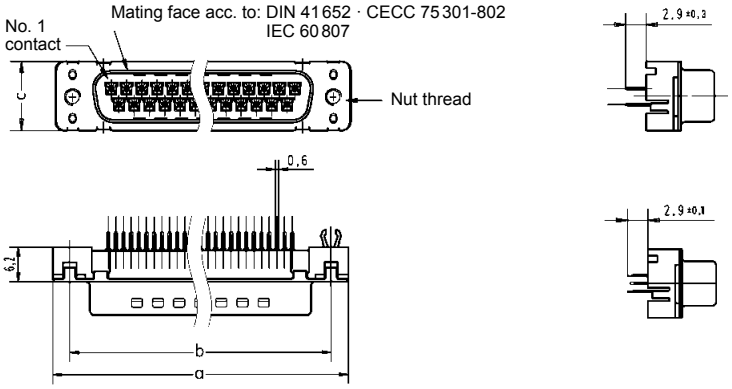

Female connector

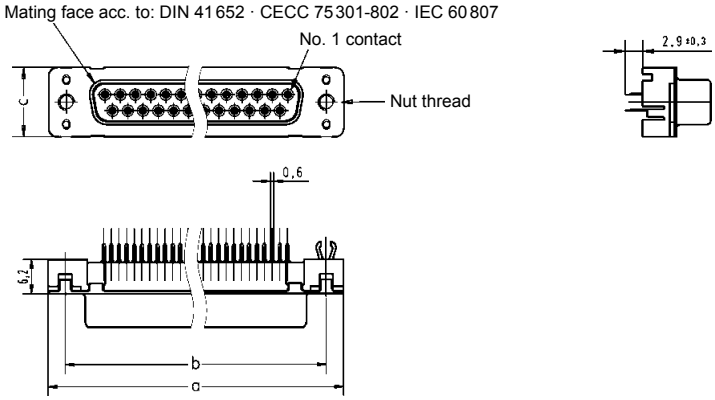

	a	$b_{\pm 0.1}$	c	g	h
9	30.9	25.0	12.5	4 x 2.74 = 10.96	3 x 2.74 = 8.22
15	39.2	33.3	12.5	7 x 2.74 = 19.18	6 x 2.74 = 16.44
25	53.1	47.0	12.5	12 x 2.76 = 33.12	11 x 2.76 = 30.36
37	69.4	63.5	12.5	18 x 2.76 = 49.68	17 x 2.76 = 46.92

Board drillings

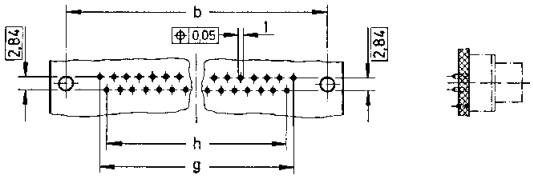

Standard Versions

Number of contacts

9–37

Mounting height

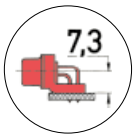

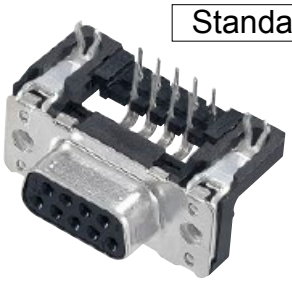

SMC stamped solder pins, angled with grounding board locks

Identification	No. of contacts	Part number	
Performance levels ▶ Explanations see page 05.176 Other performance levels on request		Performance level 3	Performance level 2
Male connector metal shell with dimples			
		2.84 mm pitch	2.84 mm pitch
	9	09 65 167 781 . [1]	09 65 167 681 . [1]
	15	09 65 267 781 . [1]	09 65 267 681 . [1]
	25	09 65 367 781 . [1]	09 65 367 681 . [1]
	37	09 65 467 781 . [1]	09 65 467 681 . [1]
		2.54 mm pitch	2.54 mm pitch
	9	09 65 166 781 .	09 65 166 681 .
	15	09 65 266 781 .	09 65 266 681 .
	25	09 65 366 781 .	09 65 366 681 .
	37	09 65 466 781 .	09 65 466 681 .
Female connector metal shell			
		2.84 mm pitch	2.84 mm pitch
	9	09 66 157 761 . [1]	09 66 157 661 . [1]
	15	09 66 257 761 . [1]	09 66 257 661 . [1]
	25	09 66 357 761 . [1]	09 66 357 661 . [1]
	37	09 66 457 761 . [1]	09 66 457 661 . [1]
		2.54 mm pitch	2.54 mm pitch
	9	09 66 156 761 .	09 66 156 661 .
	15	09 66 256 761 .	09 66 256 661 .
	25	09 66 356 761 .	09 66 356 661 .
	37	09 66 456 761 .	09 66 456 661 .

Please insert digit for flange thread or fitted female screw locks

Ø 3.1 mm hole ▶	0[1]
M3 ▶	1
4-40 UNC ▶	2
fitted screw locks 4-40 UNC ▶	3

[1] Not normally kept in stock

Standard Versions

Number of contacts

9–37

Mounting height

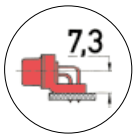

SMC stamped solder pins, angled with grounding board locks

Identification	Drawing	Dimensions in mm

Male connector

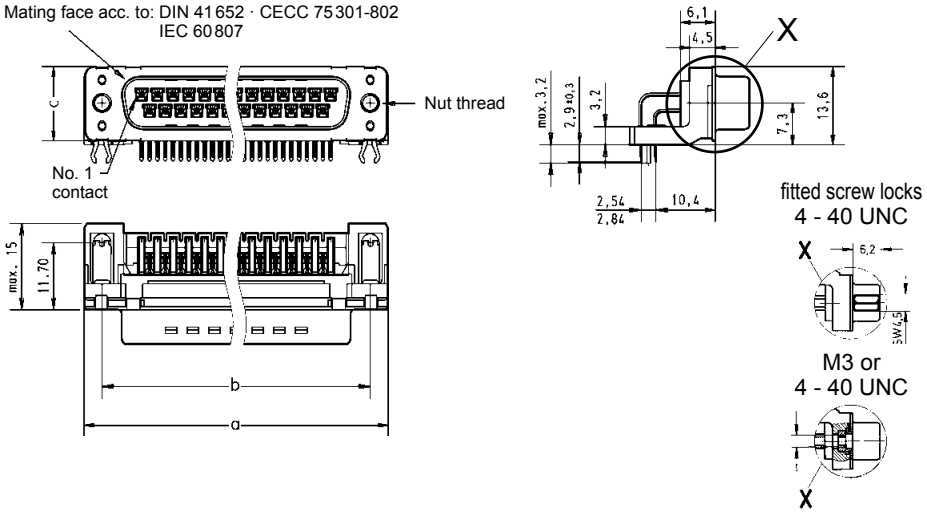

Female connector

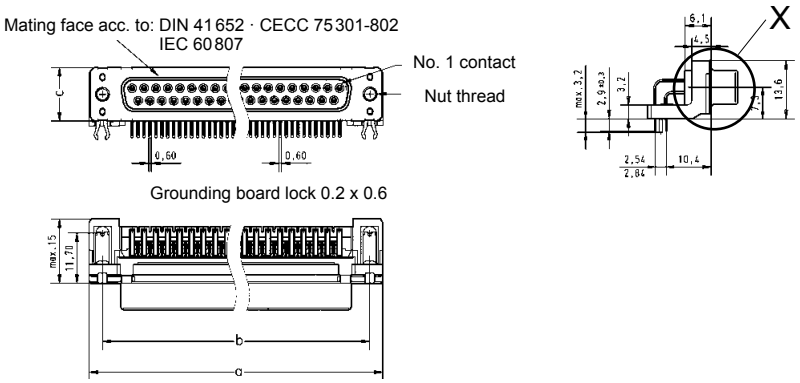

Board drillings

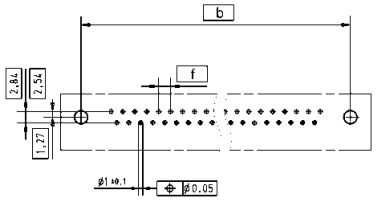

	a	$b_{\pm 0.1}$	c	f
9	30.90	25.00	12.50	2.74
15	39.20	33.30	12.50	2.74
25	53.10	47.00	12.50	2.76
37	69.40	63.50	12.50	2.76

Mating conditions see page 05.176
Mounting details see page 05.177

Low-Profile Versions

Number of contacts

9–37

Mounting height

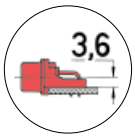

SMC stamped solder pins, angled with grounding board locks

Identification	No. of contacts	Part number	
Performance levels ▶ Explanations see page 05.176 Other contact surfaces on request		Performance level 3	Performance level 2
Male connector metal shell with dimples	9	09 65 166 781 .	09 65 166 681 .
	15	09 65 266 781 .	09 65 266 681 .
	25	09 65 366 781 .	09 65 366 681 .
	37	09 65 466 781 .	09 65 466 681 .
Female connector metal shell	9	09 66 156 761 .	09 66 156 661 .
	15	09 66 256 761 .	09 66 256 661 .
	25	09 66 356 761 .	09 66 356 661 .
	37	09 66 456 761 .	09 66 456 661 .

Please insert digit for flange thread or fitted female screw locks

M3 ▶	5
4-40 UNC ▶	6
fitted screw locks 4-40 UNC ▶	7

Low-Profile Versions

Number of contacts

9–37

Mounting height

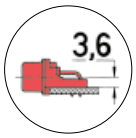

SMC stamped solder pins, angled with grounding board locks

Identification	Drawing	Dimensions in mm

Male connector

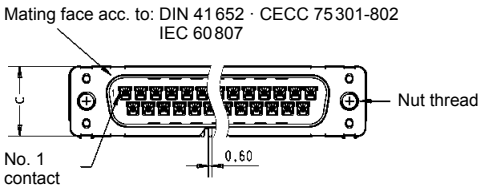

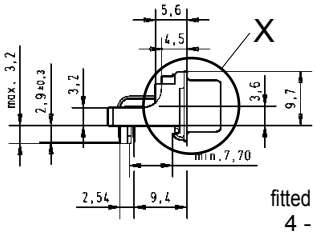

fitted screw locks
4 - 40 UNC

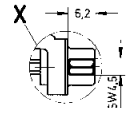

M3 or
4 - 40 UNC

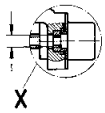

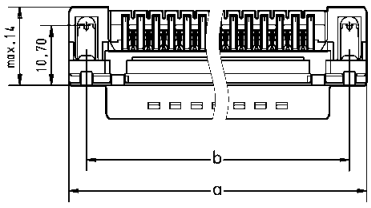

Female connector

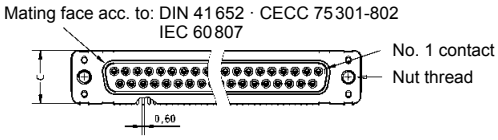

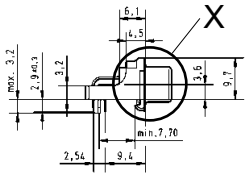

Grounding board lock 0.2 x 0.6

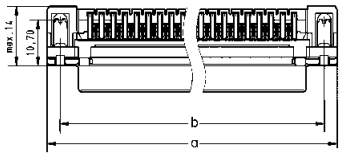

Board drillings

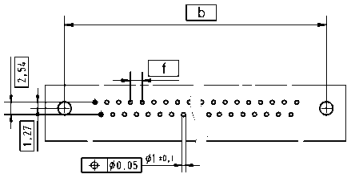

	a	$b_{\pm 0.1}$	c	f
9	30.90	25.00	12.50	2.74
15	39.20	33.30	12.50	2.74
25	53.10	47.00	12.50	2.76
37	69.40	63.50	12.50	2.76

Mating conditions see page 05.176
Mounting details see page 05.177

Number of contacts	9, 15, 25, 37 UL recognized
Working current	5 A
Test voltage $U_{r.m.s.}$	1 kV
Clearance and creepage	≥ 1.0 mm
Contact resistance Insulation resistance	< 25 mΩ > 5 GΩ
Temperature range	as per profile JEDEC 020 D
Terminations	Solder pins for P.C.B. pads
Materials	
Mouldings	LCP black UL 94-V0
Contacts	Phosphorus bronze
Grounding die	Zamac
Shell	Steel
Contact surface	
Contact zone	selectively plated acc. to performance level[1]
Grounding die	Pure tin
Shell	Nickel plated
Mating force	
9 way	≤ 30 N
15 way	≤ 50 N
25 way	≤ 83 N
37 way	≤ 123 N

Contact arrangement View from termination side

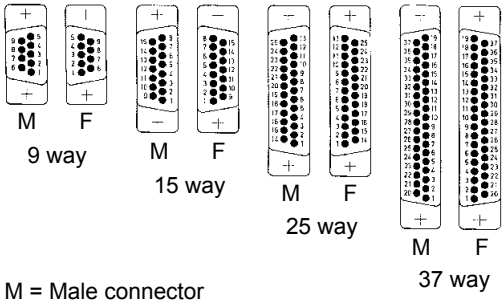

M = Male connector
F = Female connector

Mating conditions as per DIN 41 652

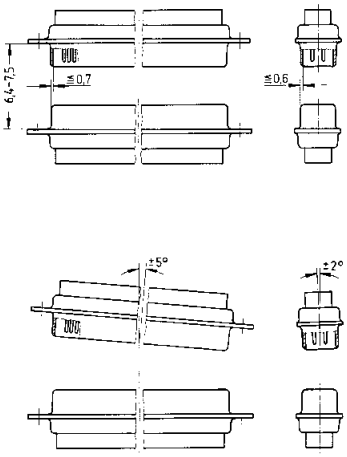

[1] Performance level 3, 50 mating cycles, no gas test
Performance level 2 as per CECC 75 301-802, 250 mating cycles, 4 days 4 mixed gas test – IEC 60 512

Notes

Standard Versions

Number of contacts

9–37

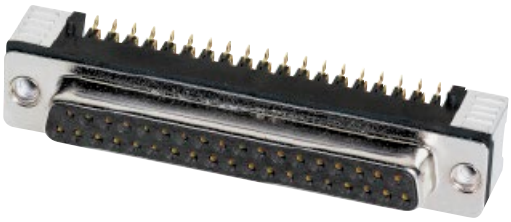

SMT stamped solder pins, angled with grounding dies

Identification	No. of contacts	Part number	
Performance levels ▶ Explanations see page 05.184 Other performance levels on request		Performance level 3	Performance level 2
Male connector metal shell with dimples	9	09 55 166 78 . . 741	09 55 166 68 . . 741
	15	09 55 266 78 . . 741	09 55 266 68 . . 741
	25	09 55 366 78 . . 741	09 55 366 68 . . 741
	37	09 55 466 78 . . 741	09 55 466 68 . . 741
Female connector metal shell	9	09 55 156 76 . . 741	09 55 156 66 . . 741
	15	09 55 256 76 . . 741	09 55 256 66 . . 741
	25	09 55 356 76 . . 741	09 55 356 66 . . 741
	37	09 55 456 76 . . 741	09 55 456 66 . . 741
Packaging: 140 pieces on a reel			
Please insert digit for flange thread or fitted female screw locks			
M3 ▶ 11			
4-40 UNC ▶ 12			
non-removable fitted screw locks M3 ▶ 21			
non-removable fitted screw locks 4-40 UNC ▶ 22			
Samples			
Male connector metal shell with dimples	9	If performance level 3 is required please order as substitute performance level 2	09 55 166 68 . . 333
	15		09 55 266 68 . . 333
	25		09 55 366 68 . . 333
	37		09 55 466 68 . . 333
Female connector metal shell	9		09 55 156 66 . . 333
	15		09 55 256 66 . . 333
	25		09 55 356 66 . . 333
	37		09 55 456 66 . . 333
Packaging **9, 15 contacts: 5 samples** **25, 37 contacts: 3 samples**			
Please insert digit for flange thread or fitted female screw locks			
4-40 UNC ▶ 12			
non-removable fitted screw locks 4-40 UNC ▶ 22			

Connector dimensions see page 05.187. Mating conditions see page 05.184.

Standard Versions

Number of contacts

9–37

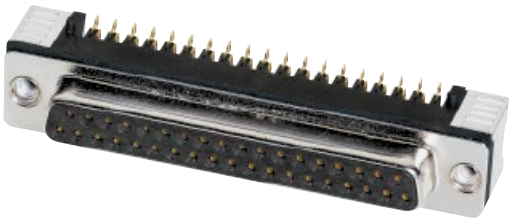

SMT stamped solder pins, angled with grounding dies

Identification	Drawing	Dimensions in mm

Male connector

M3 or 4-40 UNC non-removable fitted screw locks M3 or 4-40 UNC

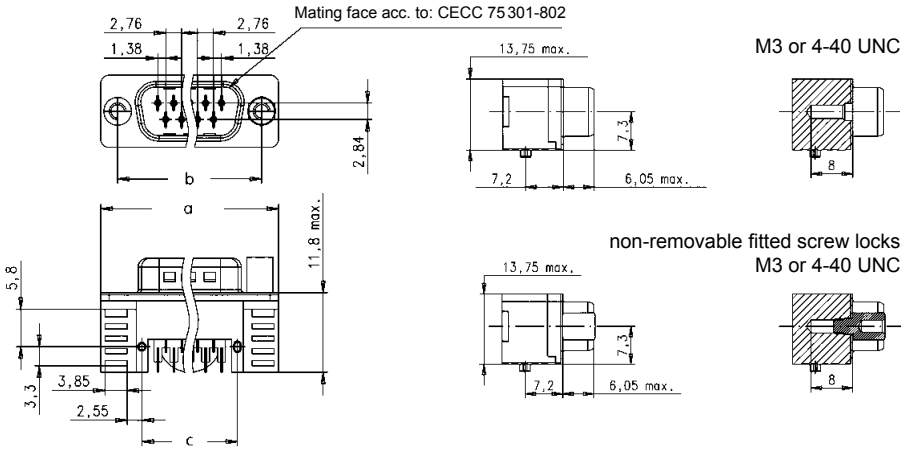

Female connector

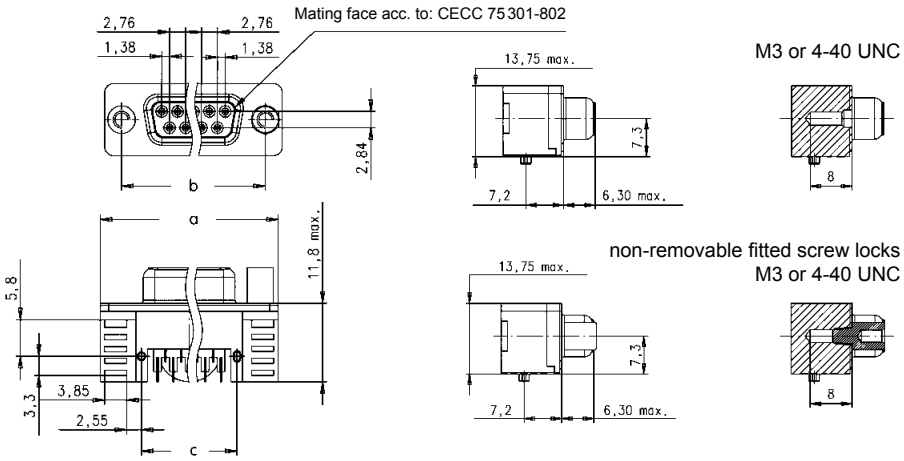

pcb layout

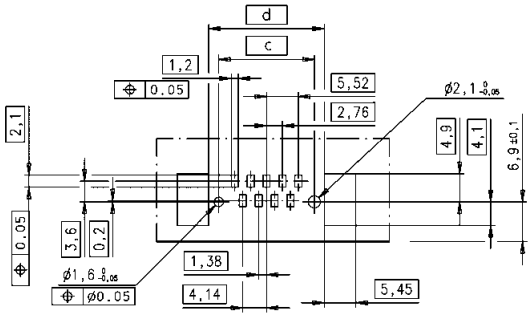

	a	b	c	d
9	31.10	24.99	16.60	20.1
15	39.52	33.32	24.90	28.4
25	53.29	47.04	38.64	42.1
37	69.60	63.50	55.10	58.6

Packaging

(1 reel = 140 pieces)
Reel diameter = 380 mm

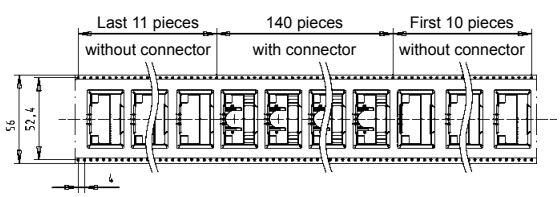

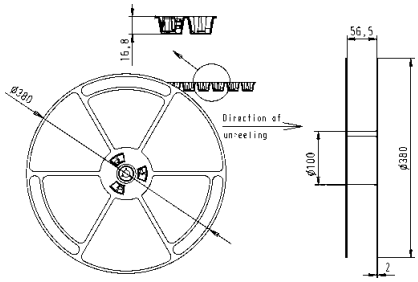

Low-Profile Versions

Number of contacts

9–37

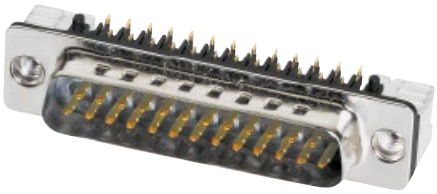

SMT stamped solder pins, angled with grounding dies

Identification	No. of contacts	Part number	
Performance levels ▶ Explanations see page 05.184 Other performance levels on request		Performance level 3	Performance level 2
Male connector metal shell with dimples	9	09 55 166 78 . . 741	09 55 166 68 . . 741
	15	09 55 266 78 . . 741	09 55 266 68 . . 741
	25	09 55 366 78 . . 741	09 55 366 68 . . 741
	37	09 55 466 78 . . 741	09 55 466 68 . . 741
Female connector metal shell	9	09 55 156 76 . . 741	09 55 156 66 . . 741
	15	09 55 256 76 . . 741	09 55 256 66 . . 741
	25	09 55 356 76 . . 741	09 55 356 66 . . 741
	37	09 55 456 76 . . 741	09 55 456 66 . . 741
Packaging: 160 pieces on a reel			
Please insert digit for flange thread or fitted female screw locks			
M3 ▶ 15			
4-40 UNC ▶ 16			
non-removable fitted screw locks M3 ▶ 19			
non-removable fitted screw locks 4-40 UNC ▶ 20			
Samples			
Male connector metal shell with dimples	9	If performance level 3 is required please order as substitute performance level 2	09 55 166 68 . . 333
	15		09 55 266 68 . . 333
	25		09 55 366 68 . . 333
	37		09 55 466 68 . . 333
Female connector metal shell	9		09 55 156 66 . . 333
	15		09 55 256 66 . . 333
	25		09 55 356 66 . . 333
	37		09 55 456 66 . . 333
Packaging **9, 15 contacts: 5 samples** **25, 37 contacts: 3 samples**			
Please insert digit for flange thread or fitted female screw locks			
4-40 UNC ▶ 16			
non-removable fitted screw locks 4-40 UNC ▶ 20			

Connector dimensions see page 05.189. Mating conditions see page 05.184.

Low-Profile Versions

Number of contacts

9–37

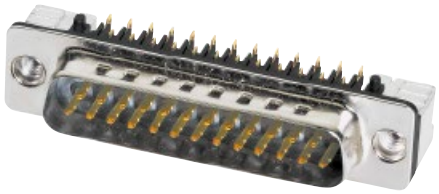

SMT stamped solder pins, angled with grounding dies

Identification	Drawing	Dimensions in mm

Male connector

M3 or 4-40 UNC non-removable fitted screw locks M3 or 4-40 UNC

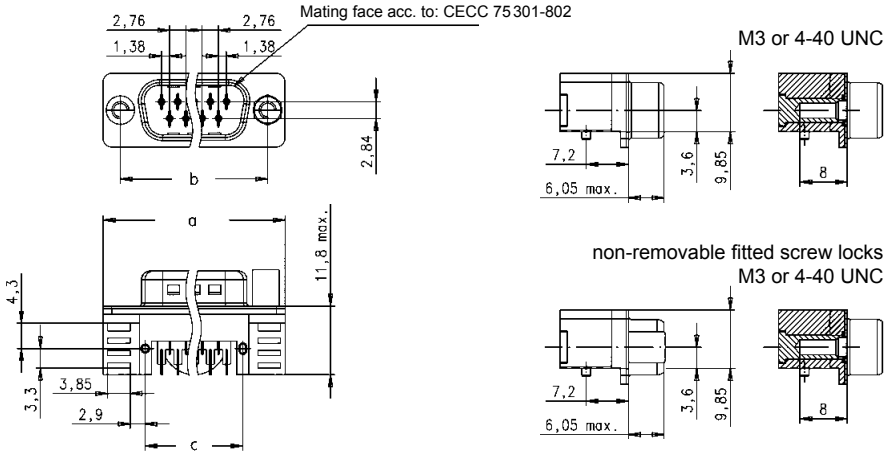

Female connector

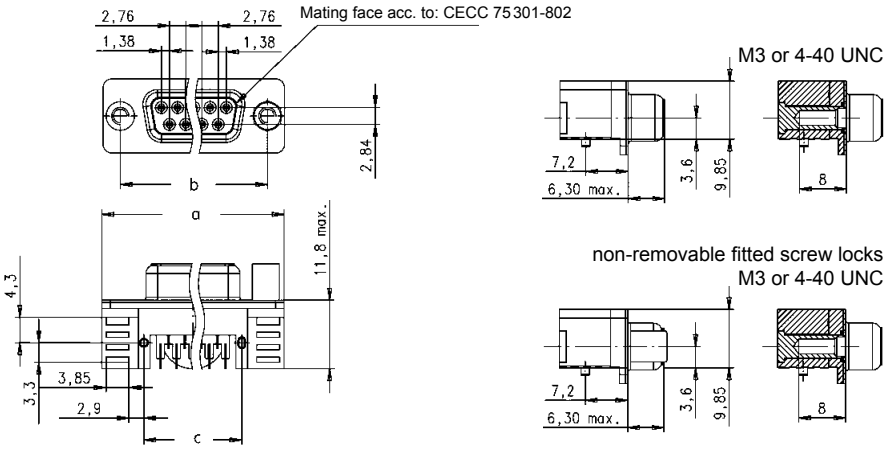

pcb layout

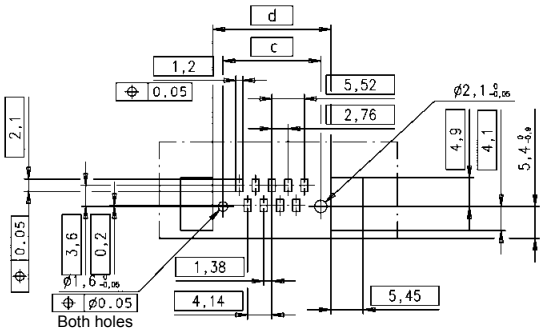

	a	b	c	d
9	31.10	24.99	16.60	20.1
15	39.52	33.32	24.90	28.4
25	53.29	47.04	38.64	42.1
37	69.60	63.50	55.10	58.6

Packaging

(1 reel = 160 pieces)
Reel diameter = 330 mm

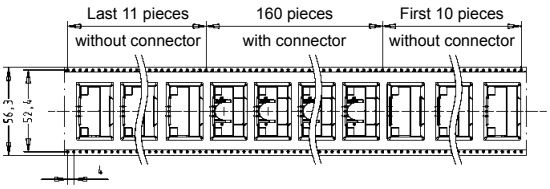

Number of contacts

9–37

SMT stamped solder pins, straight without grounding pins

Identification	No. of contacts	Part number	
Performance levels ▶ Explanations see page 05.184 Other performance levels on request		Performance level 3	Performance level 2
Male connector metal shell with dimples	9	09 55 129 78 . . 741	09 55 129 68 . . 741
	15	09 55 229 78 . . 741	09 55 229 68 . . 741
	25	09 55 329 78 . . 741	09 55 329 68 . . 741
	37	09 55 429 78 . . 741	09 55 429 68 . . 741
Female connector metal shell	9	09 55 115 76 . . 741	09 55 115 66 . . 741
	15	09 55 215 76 . . 741	09 55 215 66 . . 741
	25	09 55 315 76 . . 741	09 55 315 66 . . 741
	37	09 55 415 76 . . 741	09 55 415 66 . . 741
Packaging: 140 pieces on a reel			
Please insert digit for flange thread or fitted female screw locks M3 ▶ 11 4-40 UNC ▶ 12 fixed screw locks M3 ▶ 21 fixed screw locks 4-40 UNC ▶ 22			

Samples

Male connector metal shell with dimples	9	If performance level 3 is required please order as substitute performance level 2	09 55 129 68 . . 333
	15		09 55 229 68 . . 333
	25		09 55 329 68 . . 333
	37		09 55 429 68 . . 333
Female connector metal shell	9		09 55 115 66 . . 333
	15		09 55 215 66 . . 333
	25		09 55 315 66 . . 333
	37		09 55 415 66 . . 333
Packaging **9, 15 contacts: 5 samples** **25, 37 contacts: 3 samples**			
Please insert digit for flange thread or fitted female screw locks 4-40 UNC ▶ 12 fixed screw locks 4-40 UNC ▶ 22			

Connector dimensions see page 05.191. Mating conditions see page 05.184.

Number of contacts

9–37

SMT stamped solder pins, straight without grounding pins

Identification	Drawing	Dimensions in mm

Male connector

M3 or 4-40 UNC non-removable fitted screw locks M3 or 4-40 UNC

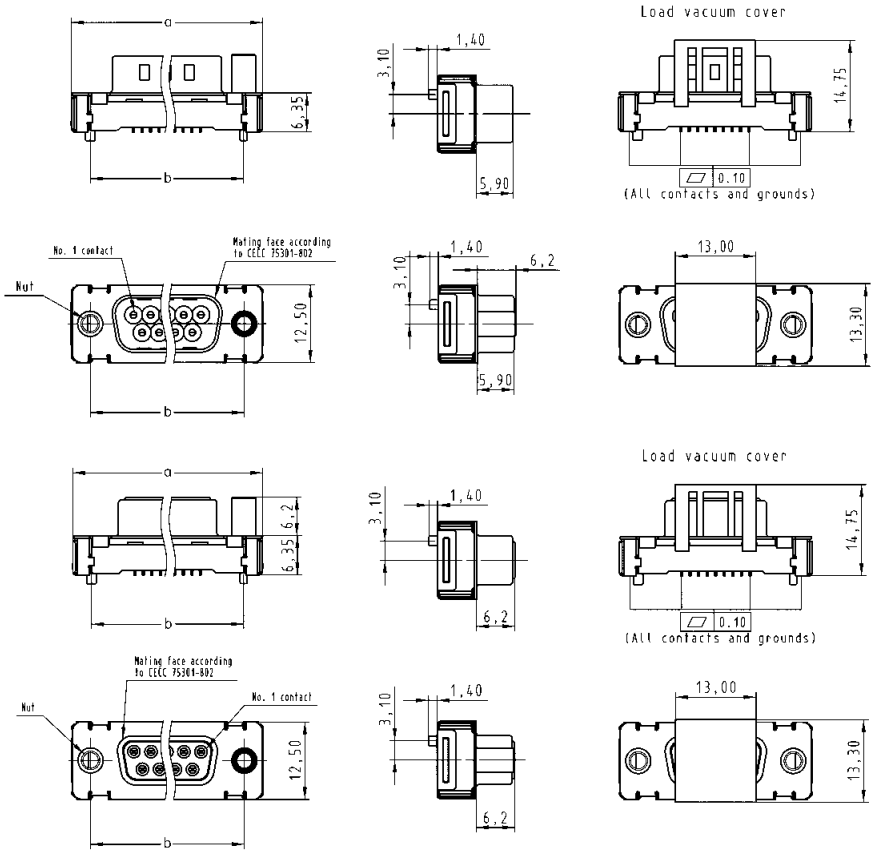

Female connector

pcb layout

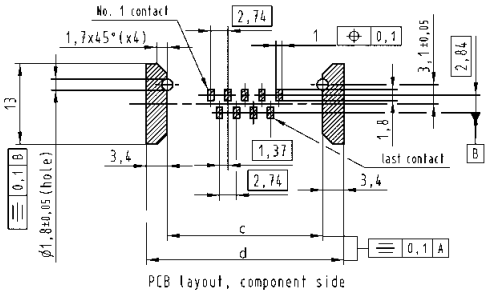

	a	b	c	d
9	31.12	25.00	25.0	31.8
15	39.45	33.33	33.3	40.1
25	53.35	47.04	47.0	53.8
37	69.62	63.50	63.5	70.3

Packaging

(1 reel = 140 pieces)
Reel diameter = 380 mm

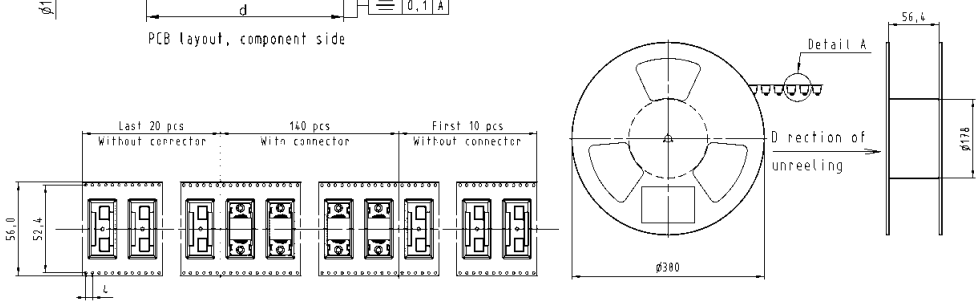

Number of contacts

9–37

SMT stamped solder pins, straight with grounding pins

Identification	No. of contacts	Part number	
Performance levels ▶ Explanations see page 05.184 Other performance levels on request		Performance level 3	Performance level 2
Male connector metal shell with dimples	9	09 55 169 78 . . 741	09 55 169 68 . . 741
	15	09 55 269 78 . . 741	09 55 269 68 . . 741
	25	09 55 369 78 . . 741	09 55 369 68 . . 741
	37	09 55 469 78 . . 741	09 55 469 68 . . 741
Female connector metal shell	9	09 55 155 76 . . 741	09 55 155 66 . . 741
	15	09 55 255 76 . . 741	09 55 255 66 . . 741
	25	09 55 355 76 . . 741	09 55 355 66 . . 741
	37	09 55 455 76 . . 741	09 55 455 66 . . 741
Packaging: 140 pieces on a reel			
Please insert digit for flange thread or fitted female screw locks			
M3 ▶ 11			
4-40 UNC ▶ 12			
fixed screw locks M3 ▶ 21			
fixed screw locks 4-40 UNC ▶ 22			

Samples

Male connector metal shell with dimples	9	If performance level 3 is required please order as substitute performance level 2	09 55 169 68 . . 333
Female connector metal shell	9		09 55 155 66 . . 333
Packaging **9, 15 contacts: 5 samples** **25, 37 contacts: 3 samples**			
Please insert digit for flange thread or fitted female screw locks			
4-40 UNC ▶ 12			
fixed screw locks 4-40 UNC ▶ 22			

Connector dimensions see page 05.193. Mating conditions see page 05.184.

Number of contacts

9–37

SMT stamped solder pins, straight with grounding pins

Identification	Drawing	Dimensions in mm

Male connector

M3 or 4-40 UNC non-removable fitted screw locks M3 or 4-40 UNC

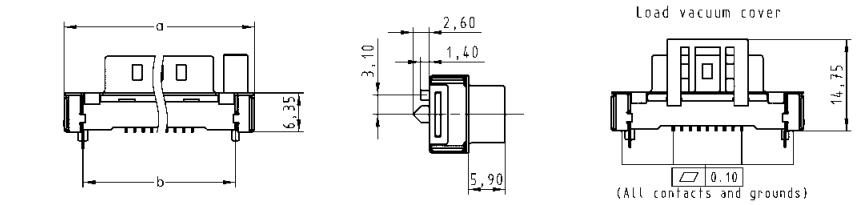

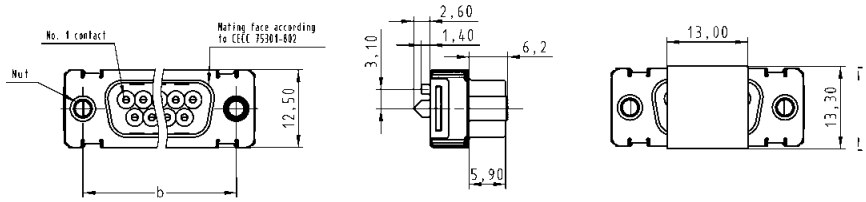

Female connector

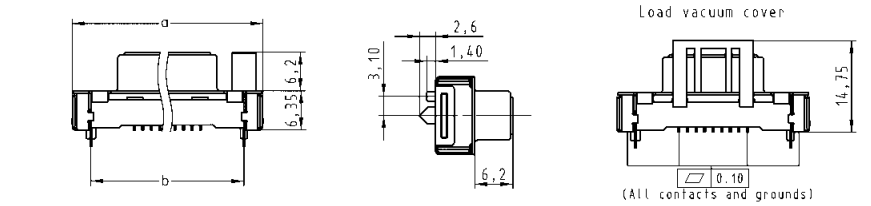

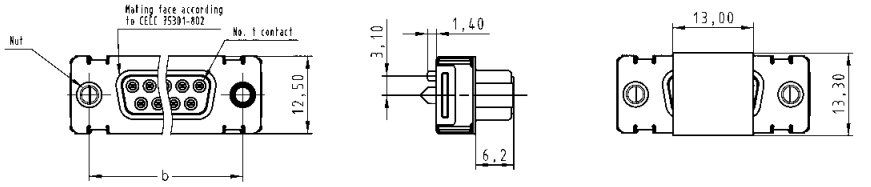

pcb layout

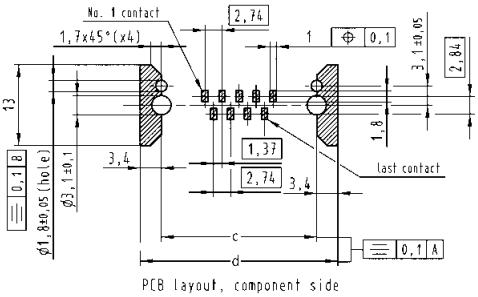

PCB layout, component side

	a	b	c	d
9	31.12	25.00	25.0	31.8
15	39.45	33.33	33.3	40.1
25	53.35	47.04	47.0	53.8
37	69.62	63.50	63.5	70.3

Packaging

(1 reel = 140 pieces)
Reel diameter = 380 mm

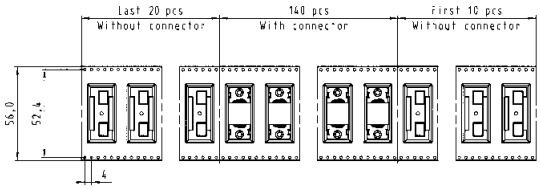

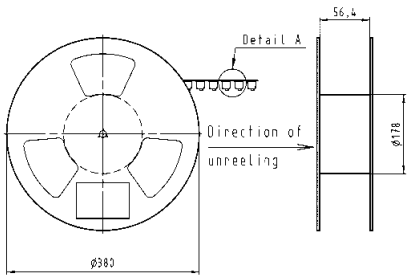

Cable assemblies

Identification	Part number	Drawing	Dimensions in mm
Cable assembly D-Sub HD 78-pole Hood: shielded plastic hood with side entry, screw 4-40 UNC Cable: 39 twisted pairs, AWG 26, double shielded, PVC Wiring: 1:1		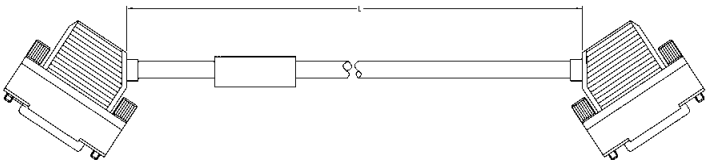	
Length: L = 0.5 m	33 56 212 0050 028		
L = 1.0 m	33 56 213 1000 002		
L = 2.0 m	33 56 213 2000 016		
L = 5.0 m	33 56 212 0500 029		
L = 10.0 m	33 56 212 1000 030		
L = 20.0 m	33 56 212 2000 031		
Cable assembly D-Sub HD 44-pole Hood: shielded plastic hood with side entry, screw 4-40 UNC Cable: 22 twisted pairs, AWG 26, double shielded, PVC Wiring: 1:1		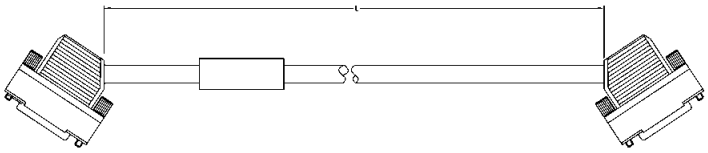	
Length: L = 0.5 m	33 56 213 0500 023		
L = 1.0 m	33 56 213 1000 024		
L = 1.5 m	33 56 213 1500 022		
L = 2.0 m	33 56 213 2000 025		
L = 5.0 m	33 56 213 5000 026		
L = 10.0 m	33 56 212 1000 027		
Cable assembly D-Sub HD 44-pole Hood: metal hood with top entry, screw 4-40 UNC Cable: 24 twisted pairs, AWG 26, double shielded, PVC Wiring: 1:1		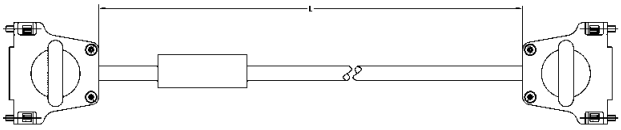	
Length: L = 0.5 m	33 56 212 0050 032		
L = 1.0 m	33 56 212 0100 033		
L = 5.0 m	33 56 212 0500 034		
L = 10.0 m	33 56 212 1000 035		
L = 20.0 m	33 56 212 2000 036		

Cable assemblies

Identification	Part number	Drawing	Dimensions in mm
Cable assembly D-Sub HD 44-pole Hood: overmoulded with side entry Cable: 24 twisted pairs, solid wires, AWG 26, shielded, halogen free Wiring: 1:1		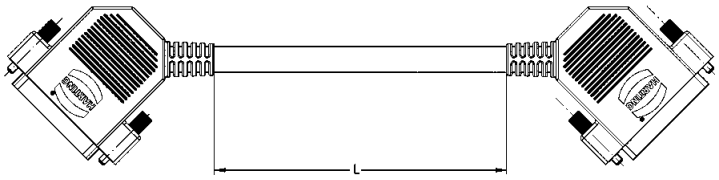	
Length: L = 0.5 m	33 56 224 5000 001		
L = 1.0 m	33 56 221 0010 001		
L = 2.0 m	33 56 221 0020 001		
L = 5.0 m	33 56 221 0050 001		
Cable assembly D-Sub 9-pole Hood: shielded plastic hood with side entry, screw 4-40 UNC Cable: 5 twisted pairs, stranded, AWG 24, shielded, PVC Wiring: 1:1		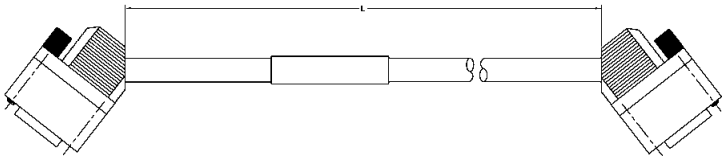	
Length: L = 0.5 m	33 66 214 5000 058		
L = 1.0 m	33 66 213 1000 059		
L = 1.5 m	33 66 213 1500 060		
L = 2.0 m	33 66 213 2000 061		
L = 5.0 m	33 66 213 5000 062		

Identification	No. of contacts	Part number
Flat cable grey UL AWM-style 2651 CSA	9	09 18 009 700 ☐
	15	09 18 015 700 ☐
	25	09 18 025 700 ☐
	37	09 18 037 700 ☐

Length per reel

30.48 m (100 feet)	1
100 m (328 feet)	4

Drawing

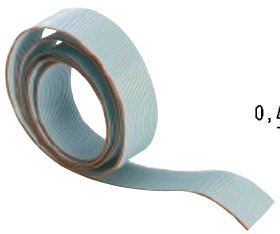

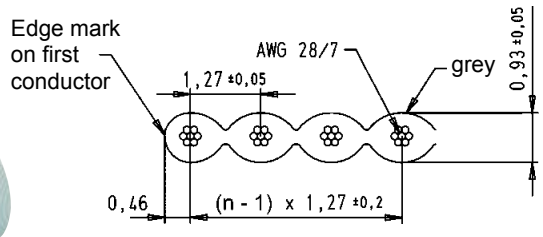

Dimensions in mm

Conductor material	Copper tinned
Gauge	AWG 28/7 0.089 mm²
Voltage rating	300 $V_{r.m.s.}$
Current rating at 25 °C	2.1 A max.
Capacity unbalanced	45.9 pF/m
Impedance unbalanced	105 Ω
Propagation delay	4.9 ns/m nominal
Insulation material	PVC
Temperature rating (operating)	–20 °C … +105 °C
Temperature rating (static)	–30 °C … +105 °C
Flammability rating	UL: VW-1
Insulation resistance	> 100 MΩ/km

Important: always store reel vertically

Identification	No. of contacts	Part number
Flat cable colour coded Length per reel 30.48 m (100 feet) UL AWM-style 2651	9	09 18 009 7005
	15	09 18 015 7005
	25	09 18 025 7005
	37	09 18 037 7005

Drawing

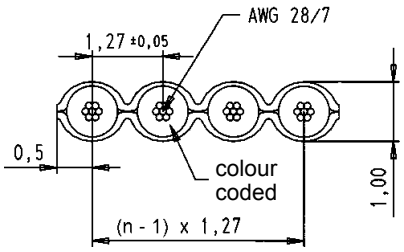

Dimensions in mm

Colour code sequence (in 10 steps)

brown, red, orange, yellow, green, blue, violet, grey, white, black

Conductor material	Copper tinned
Gauge	AWG 28/7 0.09 mm²
Voltage rating	300 $V_{r.m.s.}$
Current rating at 25 °C	2.1 A max.
Conductor resistance	221 mΩ/m
Capacity unbalanced	42.7 pF/m
Impedance unbalanced	105 Ω
Inductance unbalanced	0.68 µH/m
Signal delay	4.9 ns/m
Insulation material	PVC
Temperature rating (operating)	–20 °C … +105 °C
Temperature rating (static)	–30 °C … +105 °C
Flammability rating	UL: VW 1
Insulation resistance	100 MΩ/km

Important: always store reel vertically

Identification	No. of contacts	Part number	Drawing ø max.
Round flat cable			
with screening (shielding)	9	09 18 009 70 ⊔	6.86
	15	09 18 015 70 ⊔	7.62
	25	09 18 025 70 ⊔	9.14
	37	09 18 037 70 ⊔	10.41
UL listed PLCC CL2 CSA certified AWM FT-1			
Length per reel			
30.48 m (100 feet) 07			
100 m (328 feet) 10 *			
without screening (shielding)	9	09 18 009 7008	6.35
	15	09 18 015 7008	6.86
	25	09 18 025 7008	8.38
	37	09 18 037 7008	9.65
UL listed PLCC CL2 CSA certified AWM FT-1			
Length per reel 30.48 m (100 feet)			

Dimensions in mm

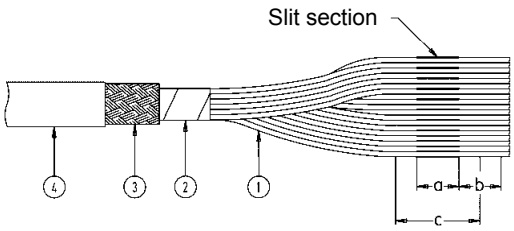

① Flat cable, AWG 28/7
② Aluminium / Polyester tape (spiral wrap)
③ 85 % minimum coverage tinned copper braid
④ Outer jacket: black PVC

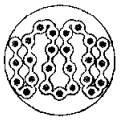

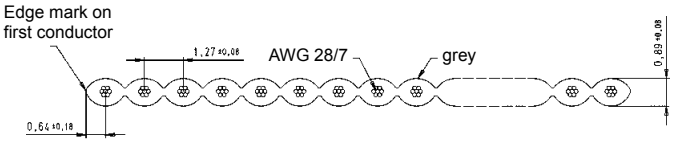

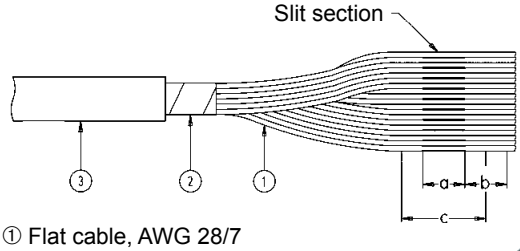

① Flat cable, AWG 28/7
② Clear polyester
③ Outer jacket: black PVC

No. of contacts	a	b	c
9 to 25	19.05	19.05	38.10
37	38.10	19.05	57.15

Conductor material	Copper tinned
Gauge	AWG 28/7 0.089 mm²
Voltage rating	300 $V_{r.m.s.}$
Conductor resistance	225 mΩ/m
Capacity unbalanced	78.7 pF/m
Impedance unbalanced	75 Ω
Signal delay	5.25 ns/m nom.
Insulation material	PVC
Temperature rating	–20 °C … +105 °C
Flammability rating	UL: VW 1
Insulation resistance	10^4 MΩ/km

* Only available for 37 contacts
Important: always store reals vertically

Notes

Mouser Electronics

Authorized Distributor

Click to View Pricing, Inventory, Delivery & Lifecycle Information:

HARTING:
09670029152 9670029152