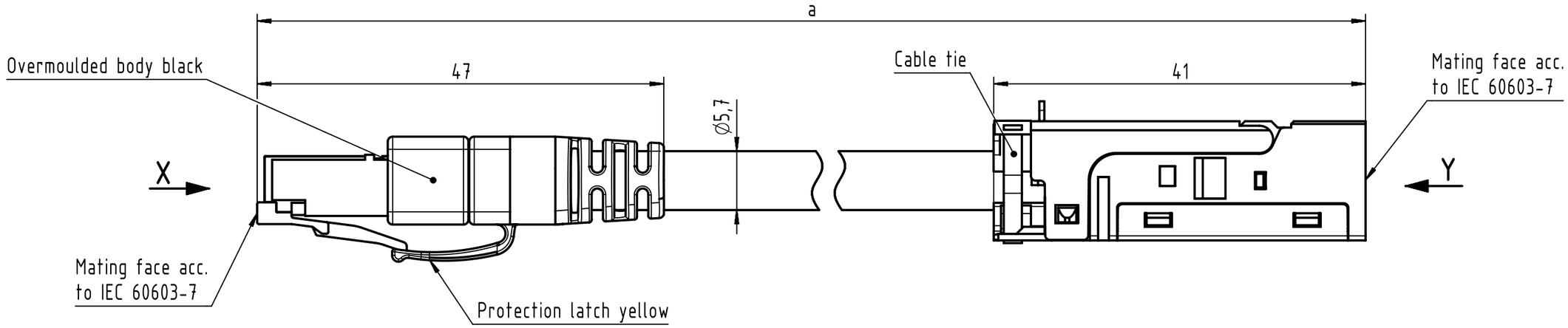

Loading-Plan
acc. to TIA/EIA 568B

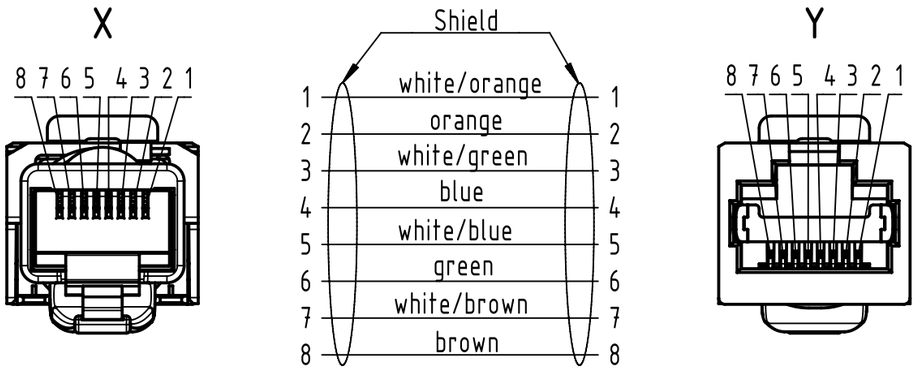

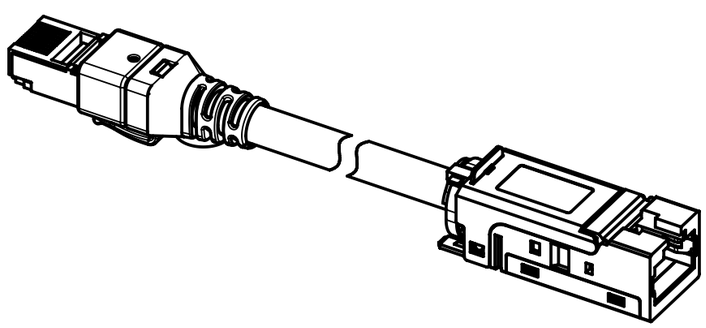

Cont. no.	Part no.	Type of cable	Dim. a[m]	Tolerance [m]
20	09455451519	4x2AWG 27/7 Cat.6 PIMF	0.25	±0.05
19	09455451518		10	±0.5
18	09455451517		7.5	±0.375
17	09455451516		5	±0.25
16	09455451515		4	±0.2
15	09455451514		3.5	±0.175
14	09455451513		3	±0.15
13	09455451512		2.5	±0.125
12	09455451511		2	±0.1
11	09455451510		1.5	±0.075
10	09455451509		1	±0.05
9	09455451508		0.9	±0.18
8	09455451507		0.8	±0.16
7	09455451506		0.7	±0.14
6	09455451505		0.6	±0.12
5	09455451504		0.5	±0.1
4	09455451503		0.4	±0.08
3	09455451502		0.3	±0.06
2	09455451501		0.2	±0.04
1	09455451500		0.15	±0.03

All Dimensions in mm
Original Size DIN A3

Scale 2:1 | Free size tol. | Ref. | Sub.

All rights reserved

Department EC PD - RO

HARTING Electronics GmbH
D-32339 Espelkamp

Created by	Inspected by	Standardisation	Date	State
TAMAS	AVRAM	HOFFMANN	2016-03-14	Final Release

Title: RJ Industrial Cable Assembly

Doc-Key / ECM-Nr.: 100534757/UGD/001/B 500000101747

Type: TB | Number: 094554515XX | Rev.: B | Page: 1/1

A3

Mouser Electronics

Authorized Distributor

Click to View Pricing, Inventory, Delivery & Lifecycle Information:

HARTING:

09455451518 09455451500 09455451509 09455451516 09455451502 09455451501 09455451504 09455451510 09455451517 09455451512 09455451506 09455451519 09455451511 09455451513