Push-On SMP Female Right Angle to Push-On SMP Female Right Angle Low Loss Cable Using LMR-100 Coax

RF Cable Assemblies Technical Data Sheet PE3C3749

Configuration

- Connector 1: Push-OnSMP Female Right Angle
- Connector 2: Push-OnSMP Female Right Angle
- Cable Type: LMR-100A

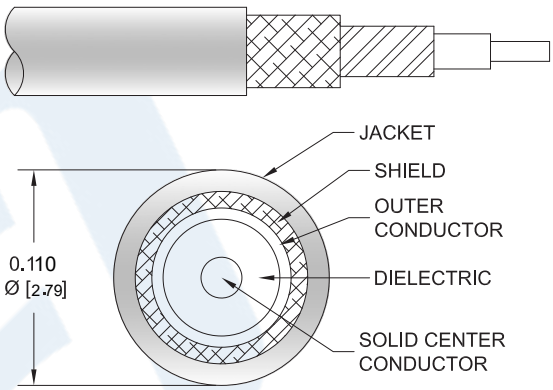

Features

- Max Frequency 3 GHz
- Shielding Effectivity > 90 dB
- 66% Phase Velocity
- Double Shielded
- PVC Jacket

Applications

- General Purpose
- Laboratory Use

Description

Pasternack's PE3C3749 SMP female push-on right angle to SMP female push-on right angle cable using LMR-100 coax is part of our full line of RF components available for same-day shipping. Pasternack's flexible RF cable assemblies are ideal for applications where tight bends and flexure are required. This Pasternack SMP to SMP cable assembly has a female to female gender configuration with 50 ohm flexible LMR-100A coax. The PE3C3749 SMP female to SMP female cable assembly operates to 3 GHz. The right angle SMP interfaces on the LMR-100A cable allow for easier connections in tight spaces. The double shielding of this Pasternack cable assembly provides excellent shielding effectiveness of better than 90 dB.

Custom versions of most RF cable assemblies can be built and shipped same day. Custom cable assembly lengths can be obtained by specifying the desired length on the web site at time of order or by contacting a sales representative. Other available RF cable assembly value added services include connector orientation or clocking, heat shrink booting and custom labeling. RF testing can also be performed to document the electrical performance of your cable assembly.

Click the following link (or enter part number in "SEARCH" on website) to obtain additional part information including price, inventory and certifications: Push-On SMP Female Right Angle to Push-On SMP Female Right Angle Low Loss Cable Using LMR-100 Coax PE3C3749

Pasternack Enterprises, Inc. • P.O. Box 16759, Irvine, CA 92623
Phone: (866) 727-8376 or (949) 261-1920 • **Fax:** (949) 261-7451
Sales@Pasternack.com • Techsupport@Pasternack.com

© 2020 Pasternack Enterprises All Rights Reserved

PASTERNACK an INFINITE brand

Push-On SMP Female Right Angle to Push-On SMP Female Right Angle Low Loss Cable Using LMR-100 Coax

RF Cable Assemblies Technical Data Sheet PE3C3749

Electrical Specifications

Description	Minimum	Typical	Maximum	Units
Frequency Range	DC		3	GHz
VSWR			1.4:1	
Velocity of Propagation		66		%
RF Shielding	90			dB
Group Delay		1.54 [5.05]		ns/ft [ns/m]
Capacitance		30.8 [101.05]		pF/ft [pF/m]
Inductance		0.077 [0.25]		uH/ft [uH/m]
DC Resistance Inner Conductor		81 [265.75]		Ω/1000ft [Ω/Km]
DC Resistance Outer Conductor		9.5 [31.17]		Ω/1000ft [Ω/Km]
Jacket Spark			2,000	Vrms

Specifications by Frequency

Description	F1	F2	F3	F4	F5	Units
Frequency	0.1	0.25	0.5	1	3	GHz
Insertion Loss (Typ.)	0.07	0.115	0.165	0.24	0.434	dB/ft
	0.23	0.38	0.54	0.79	1.42	dB/m

Electrical Specification Notes:
Insertion Loss does not include the loss of the connectors. Insertion Loss is estimated as 0.2 dB per connector.

Mechanical Specifications

Cable Assembly

Weight	0.024 lbs [10.89 g]

Cable

Cable Type	LMR-100A
Impedance	50 Ohms
Inner Conductor Type	Solid
Inner Conductor Material and Plating	Copper Clad Steel
Dielectric Type	PE
Number of Shields	2
Shield Layer 1	Aluminum Tape
Shield Layer 2	Tinned Copper Braid
Jacket Material	PVC, Black
Jacket Diameter	0.11 in [2.79 mm]

Click the following link (or enter part number in “SEARCH” on website) to obtain additional part information including price, inventory and certifications: Push-On SMP Female Right Angle to Push-On SMP Female Right Angle Low Loss Cable Using LMR-100 Coax PE3C3749

Pasternack Enterprises, Inc. • P.O. Box 16759, Irvine, CA 92623
Phone: (866) 727-8376 or (949) 261-1920 • **Fax:** (949) 261-7451
Sales@Pasternack.com • Techsupport@Pasternack.com

© 2020 Pasternack Enterprises All Rights Reserved

Push-On SMP Female Right Angle to Push-On SMP Female Right Angle Low Loss Cable Using LMR-100 Coax

RF Cable Assemblies Technical Data Sheet PE3C3749

One Time Minimum Bend Radius	0.25 in [6.35 mm]
Repeated Minimum Bend Radius	1 in [25.4 mm]
Bending Moment	0.1 lbs-ft [0.14 N-m]
Flat Plate Crush	10 lbs/in [0.18 Kg/mm]
Tensile Strength	15 lbs [6.8 Kg]

Connectors

Description	Connector 1	Connector 2
Type	SMP Female Right Angle	SMP Female Right Angle
Specification	MIL-STD-348A	MIL-STD-348A
Impedance	50 Ohms	50 Ohms
Connection Method	Push-On	Push-On
Contact Material and Plating	Beryllium Copper, Gold	Beryllium Copper, Gold
Contact Plating Specification	30µ in. minimum	30µ in. minimum
Dielectric Type	Teflon	Teflon
Outer Conductor Material and Plating	Beryllium Copper, Gold	Beryllium Copper, Gold
Outer Conductor Plating Specification	3µ in. minimum	3µ in. minimum
Body Material and Plating	Brass, Gold	Brass, Gold
Body Plating Specification	3µ in. minimum	3µ in. minimum

Environmental Specifications

Temperature

Operating Range	-40 to +85 deg C

Compliance Certifications (see product page for current document)

Plotted and Other Data

Notes:

Click the following link (or enter part number in “SEARCH” on website) to obtain additional part information including price, inventory and certifications: Push-On SMP Female Right Angle to Push-On SMP Female Right Angle Low Loss Cable Using LMR-100 Coax PE3C3749

Pasternack Enterprises, Inc. • P.O. Box 16759, Irvine, CA 92623
Phone: (866) 727-8376 or (949) 261-1920 • **Fax:** (949) 261-7451
Sales@Pasternack.com • Techsupport@Pasternack.com

© 2020 Pasternack Enterprises All Rights Reserved

Push-On SMP Female Right Angle to Push-On SMP Female Right Angle Low Loss Cable Using LMR-100 Coax

RF Cable Assemblies Technical Data Sheet PE3C3749

How to Order

Part Number Configuration: **PE3C3749 - xx uu**

- **uu** — Unit of Measure:
  - cm = Centimeters
  - <blank> = Inches
- **xx** — Length
- **PE3C3749** — Base Number

Example: PE3C3749-12 = 12 inches long cable
PE3C3749-100cm = 100 cm long cable

Push-On SMP Female Right Angle to Push-On SMP Female Right Angle Low Loss Cable Using LMR-100 Coax from Pasternack Enterprises has same day shipment for domestic and International orders. Our RF, microwave and millimeter wave products maintain a 99.4% availability and are part of the broadest selection in the industry.

Click the following link (or enter part number in “SEARCH” on website) to obtain additional part information including price, inventory and certifications: Push-On SMP Female Right Angle to Push-On SMP Female Right Angle Low Loss Cable Using LMR-100 Coax PE3C3749

URL: https://www.pasternack.com/push-on-smp-female-right-angle-to-push-on-smp-female-low-loss-cable-using-lmr-100-pe3c3749-p.aspx

The information contained in this document is accurate to the best of our knowledge and representative of the part described herein. It may be necessary to make modifications to the part and/or the documentation of the part, in order to implement improvements. Pasternack reserves the right to make such changes as required. Unless otherwise stated, all specifications are nominal. Pasternack does not make any representation or warranty regarding the suitability of the part described herein for any particular purpose, and Pasternack does not assume any liability arising out of the use of any part or documentation.

Pasternack Enterprises, Inc. • P.O. Box 16759, Irvine, CA 92623
Phone: (866) 727-8376 or (949) 261-1920 • **Fax:** (949) 261-7451
Sales@Pasternack.com • Techsupport@Pasternack.com

© 2020 Pasternack Enterprises All Rights Reserved

PE3C3749 CAD Drawing

Push-On SMP Female Right Angle to Push-On SMP Female Right Angle Low Loss Cable Using LMR-100 Coax

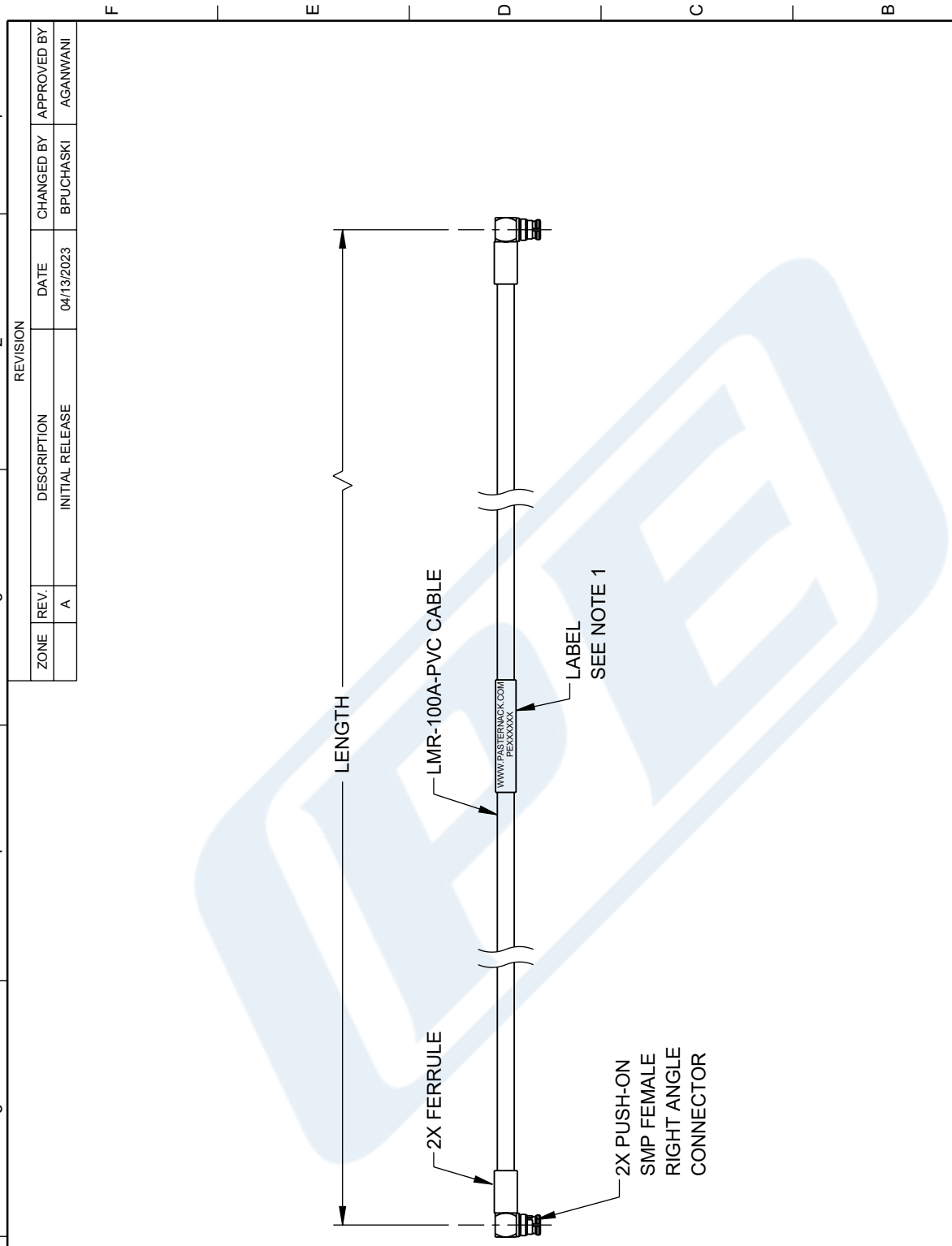

ZONE	REV.	DESCRIPTION	DATE	CHANGED BY	APPROVED BY
	A	INITIAL RELEASE	04/13/2023	BPUCHASKI	AGANWANI

REVISION

NOTES:

1. CABLE ASSEMBLY LENGTH LABEL PLACEMENT: 36 INCHES OR LESS , ONE LABEL APPROXIMATELY CENTERED. LONGER THAN 36 INCHES, TWO LABELS APPROXIMATELY 6 INCHES FROM EACH CONNECTOR.
2. CABLE ASSEMBLIES SHALL BE TESTED FOR CONTINUITY

UNLESS OTHERWISE SPECIFIED LEADING DIMENSIONS ARE INCHES DIMENSIONS IN [ ] ARE MILLIMETERS

TOLERANCES:
.X = ± .2 [.5] | FRACTIONS ± 1/32
.XX = ± .02 [.5] | ANGLES ± 1°
.XXX = ± .005 [.13]

CABLE LENGTH TOLERANCES:
≤12 [305] = +1 [25] / -0
>12 [305] ≤ 60 [1524] = +2 [51] / -0
>60 [1524] ≤ 120 [3048] = +4 [102] / -0
>120 [3048] ≤ 300 [7620] = +6 [152] / -0
>300 [7620] = +5% / -0

ALL DIMENSIONS ARE FOR REFERENCE ONLY AND SUBJECT TO CHANGE WITHOUT NOTICE.

PASTERNACK® an INFINITE brand

Website: www.Pasternack.com
Phone: 1.866.727.8376 | 1.949.261.1920

INTERPRET ALL DIMENSIONS AND TOLERANCES PER ASME Y14.5

SCALE: NONE | SHEET: 1 OF 1

DESCRIPTION: Push-On SMP Female Right Angle to Push-On SMP Female Right Angle Low Loss Cable Using LMR-100 Coax

SIZE	CAGE CODE	DRAWN BY	ITEM NO.	REV
A	53919	BPUCHASKI	PE3C3749	A

THE INFORMATION CONTAINED IN THIS DRAWING IS THE SOLE PROPERTY OF INFINITE ELECTRONICS, INC. ANY REPRODUCTION IN PART OR WHOLE WITHOUT THE WRITTEN PERMISSION OF INFINITE ELECTRONICS, INC. IS PROHIBITED. THESE COMMODITIES, TECHNOLOGY OR SOFTWARE WERE EXPORTED FROM THE UNITED STATES IN ACCORDANCE WITH THE EXPORT ADMINISTRATION REGULATIONS. DIVERSION CONTRARY TO U.S. LAW PROHIBITED.

T-Rev.D2

Mouser Electronics

Authorized Distributor

Click to View Pricing, Inventory, Delivery & Lifecycle Information:

Pasternack:

PE3C3749-100CM