CUI Devices is now Same Sky! Learn More

SERIES: RCJ-01 | DESCRIPTION: RCA JACK

FEATURES

- through hole
- right angle

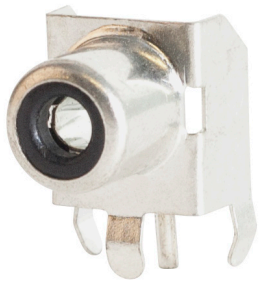

PART NUMBER KEY

RCJ-01 X

Base Number

Housing Color:
1 = Black
2 = Red
3 = White
4 = Yellow
5 = Blue
6 = Green
7 = Orange

SPECIFICATIONS

parameter	conditions/description	min	typ	max	units
rated voltage			12		Vdc
rated current				1	A
contact resistance	at 1 kHz less than 100 mA			30	mΩ
insulation resistance	at 500 Vdc	100			MΩ
voltage withstand	for 1 minute			500	Vac
insertion force	with mating plug			3	kgf
withdrawal force	with mating plug	0.4			kgf
operating temperature		-40		85	ºC
storage temperature		-40		85	ºC
life	at a rate of 20~30 cycles per minute		1,500		cycles
hand soldering	for 3 ±0.5 seconds	340	350	360	ºC
flammability rating	UL94V-0				
RoHS	yes				

MECHANICAL DRAWING

units: mm[inch]
tolerance: ±0.3 mm

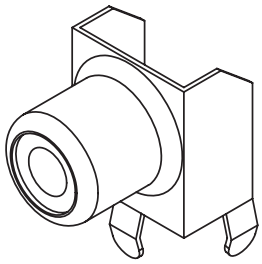

	MATERIAL	PLATING
terminals	brass	tin
shell	iron	tin
insulator	PA9T	

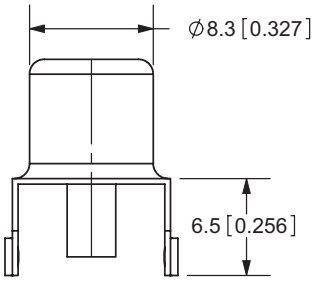

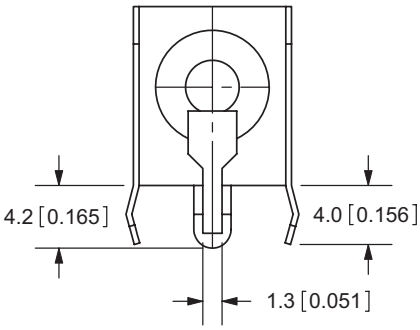

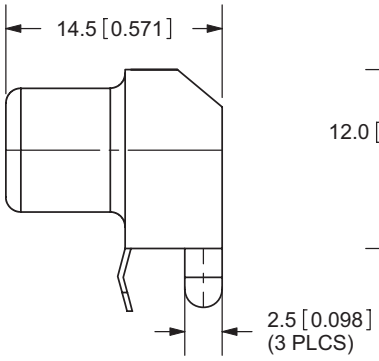

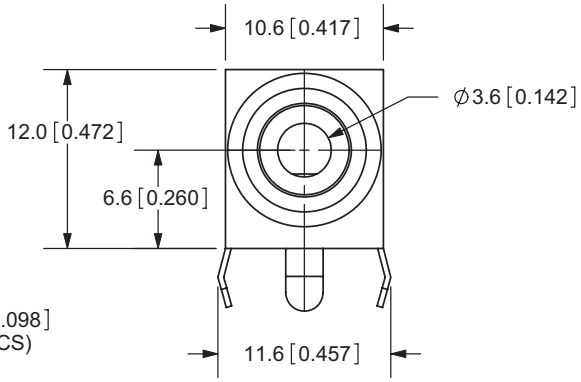

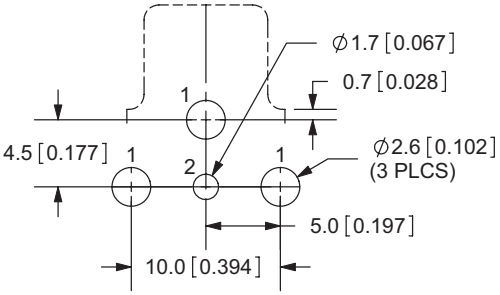

Recommended PCB Layout
Top View

Model No.	RCJ-01
Schematic	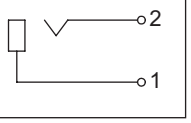

REVISION HISTORY

rev.	description	date
1.0	initial release	06/04/2007
1.01	added shell cut	01/30/2008
1.02	changed to PA9T plastic, brand update	11/07/2019
1.03	logo, datasheet style update	11/21/2022
1.04	CUI Devices rebranded to Same Sky	09/12/2024

The revision history provided is for informational purposes only and is believed to be accurate.

Same Sky offers a one (1) year limited warranty. Complete warranty information is listed on our website.

Same Sky reserves the right to make changes to the product at any time without notice. Information provided by Same Sky is believed to be accurate and reliable. However, no responsibility is assumed by Same Sky for its use, nor for any infringements of patents or other rights of third parties which may result from its use.

Same Sky products are not authorized or warranted for use as critical components in equipment that requires an extremely high level of reliability. A critical component is any component of a life support device or system whose failure to perform can be reasonably expected to cause the failure of the life support device or system, or to affect its safety or effectiveness.

Mouser Electronics

Authorized Distributor

Click to View Pricing, Inventory, Delivery & Lifecycle Information:

Same Sky:

RCJ-011 RCJ-012 RCJ-013 RCJ-014 RCJ-017 RCJ-015 RCJ-016