OD172SAP XC Series

DC Fans - 12, 24, 48V
172mm x 150mm x 51mm
(6.8” x 5.9” x 2.0”)

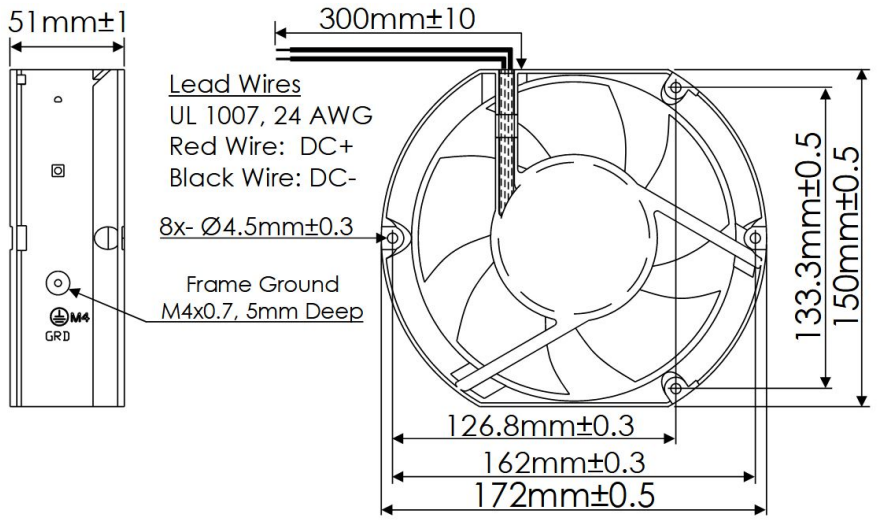

Frame	Die Cast Aluminum, Black Finish
Impeller	PBT, UL94 V-2 Plastic
Connection	2x Lead Wires, 24 AWG
Motor	Brushless DC, Auto Cutoff, Auto Restart, Polarity Protected, Electronically Protected
Bearing System	Dual Ball Bearings
Dielectric Strength	500VDC/min, <1mA
Insulation Resistance	≥10MΩ @ 500V DC

Operating Temperature
-20°C ~ +7°C

Storage Temperature
-40°C ~ +80°C

Life Expectancy
65,000 Hours (L10 at 45°C)

Available Options
PWM Speed Control Input
Tachometer Output
Alarm Output
Other Speeds

Weight: 1.63 lbs.

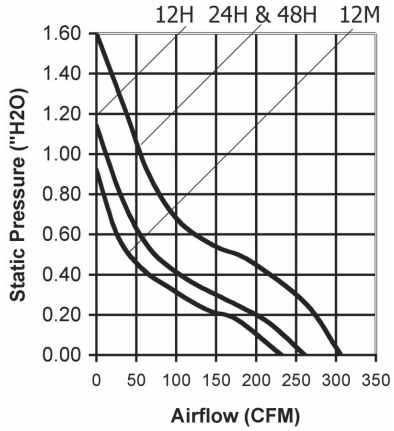

Part Number	Rated Voltage (Volts DC)	Voltage Range (Volts DC)	Rated Power (Watts)(Max)	Rated Current (Amps)(Max)	Rated Speed (RPM)	Max Airflow (CFM)	Noise Level (dBA)	Max Static Pressure (“H_2O)
OD172SAP-12HBXC	12	11 ~ 13.8	42.0 (50.4)	3.50 (4.20)	3900	277	62	1.14
OD172SAP-12MBXC	12	11 ~ 13.8	28.8 (34.6)	2.40 (2.88)	3400	232	59	0.92
OD172SAP-24HBXC	24	22 ~ 26.0	55.2 (66.3)	2.30 (2.76)	4500	307	67	1.60
OD172SAP-48HBXC	48	40 ~ 52.0	43.2 (57.6)	0.90 (1.20)	4500	307	67	1.60

Knight Electronics, Inc.
10557 Metric Drive
Dallas, TX 75243
214-340-0265

Revised 8/2/2024
m4

E170149

Orion Fans
Information and data is subject to change without prior notification

Mouser Electronics

Authorized Distributor

Click to View Pricing, Inventory, Delivery & Lifecycle Information:

Orion Fans:

OD172SAP-48HBXC OD172SAP-24HBXC OD172SAP-12HBXC OD172SAP-12MBXC