OA280AP IP Rated Series

AC Fans - 115, 230V
280mm x 89mm
(11.0" x 3.5")

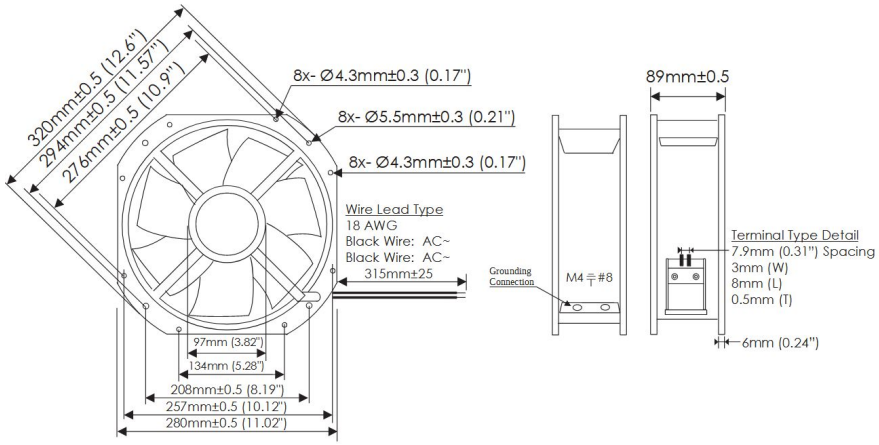

Frame	Die Cast Aluminum, Black Finish
Impeller	Steel Alloy, Black Finish
Connection	Lead Wires, 18 AWG, or Terminals
Motor	AC, Capacitor Induction, Single Phase, Thermally Protected, IP68 or IP69K
Bearing System	Ball Bearings
Dielectric Strength	1500VAC/min, <1mA
Insulation Resistance	≥10MΩ @ 500V DC

Operating Temperature
-30°C ~ +80°C

Storage Temperature
-40°C ~ +100°C

Life Expectancy
50,000 Hours (L10 at 55°C)

Installed Options
IP68 or IP69K Rated Motor

Weight: 7.4 lbs

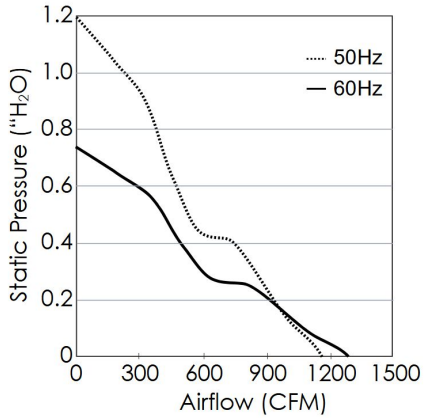

Part Number	Rated Voltage (Volts AC)	Voltage Range (Volts AC)	Frequency (Hertz)	Input Power (Watts)	Rated Speed (RPM)	Max Airflow (CFM)	Noise Level (dBA)	Max Static Pressure ("H_2O)
OA280AP-11-1*B18***	115	100 ~ 125	50 / 60	155 / 210	2775 / 3150	1150 / 1300	73	1.2 / 0.75
OA280AP-22-1*B18***	230	200 ~ 240	50 / 60	155 / 210	2775 / 3150	1150 / 1300	73	1.2 / 0.75

* Substitute "T" for Terminal connection type, or "W" for Lead Wire connection type.
*** Substitute "68" for IP68 Rating, or "69K" for IP69K Rating.

Knight Electronics, Inc.
10557 Metric Drive
Dallas, TX 75243
214-340-0265

Revised 08/25/2022
m0

Orion Fans
Information and data is subject to change without prior notification

Mouser Electronics

Authorized Distributor

Click to View Pricing, Inventory, Delivery & Lifecycle Information:

Orion Fans:

OA280AP-11-1TB1868 OA280AP-11-1WB1868 OA280AP-22-1TB1868 OA280AP-22-1WB1868