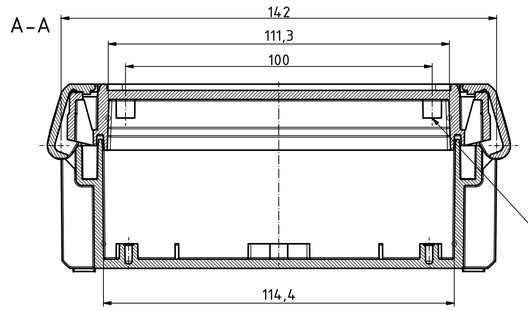

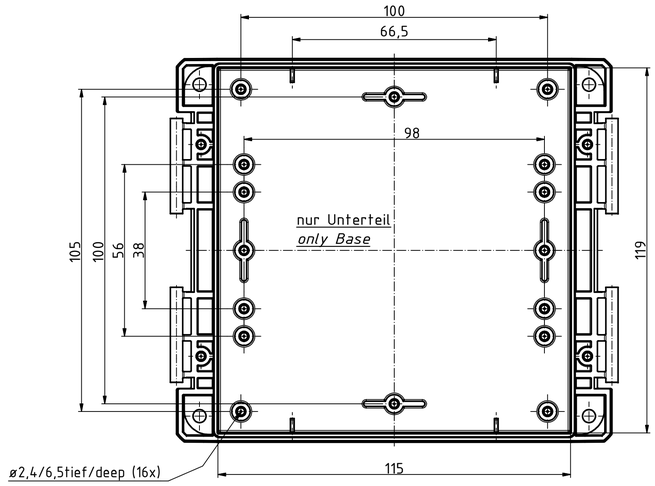

ø2,4/7,5tief/deep (4x)
Oberteil/*Lid*

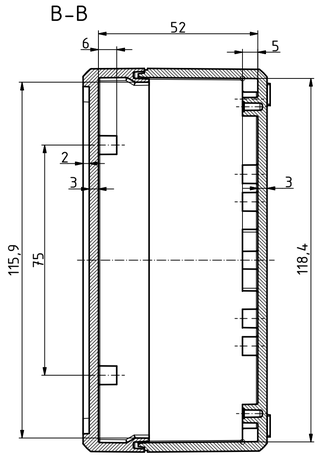

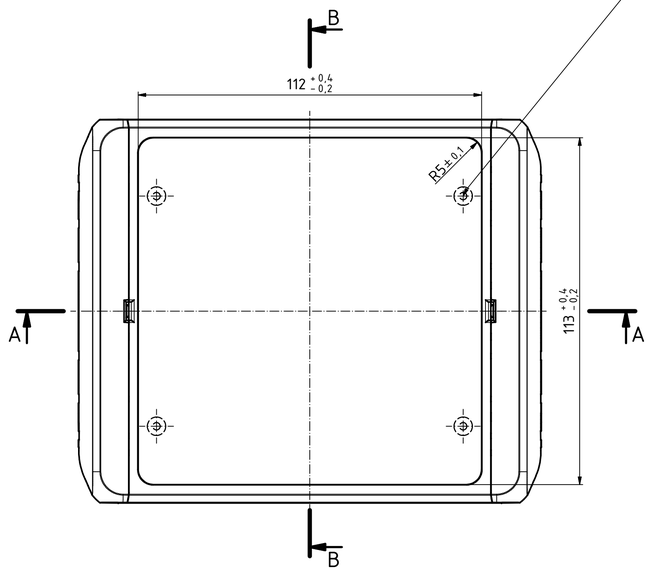

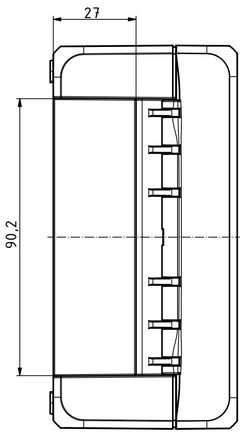

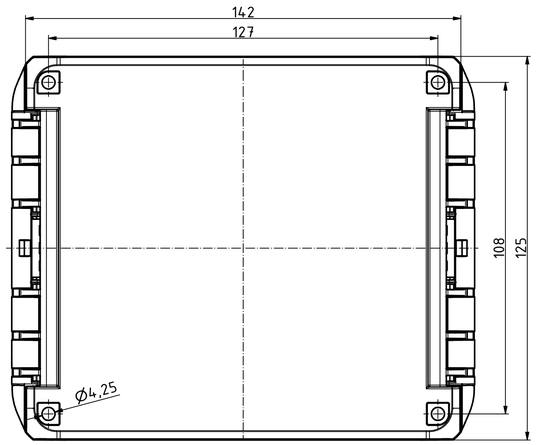

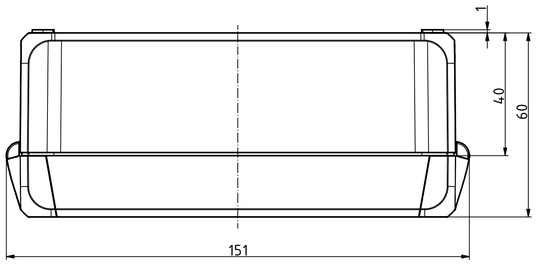

ISO (1 : 2)

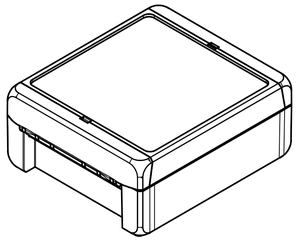

(1 : 2)

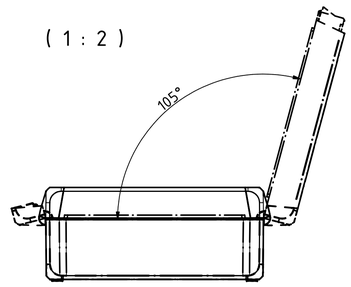

Maßstab/ *Scale:*	1:1, 1:2
Zeichnungs-Nr. / *Drawing-No.:*	1K 5390.035.03
Artikel / *Article:*	BOCUBE B-141306 Katalogzg./Catalogue draw.
A.Nr/ *Alt.No:*	4105 4027
Datum/ *Date:*	08.09.2014 11.12.2012
DISK:	2503380.idw
Datum/*Date:*	22.06.2012 KH

BOPLA
A Phoenix Mecano Company

"Schutzvermerk nach DIN ISO 16016 beachten" "*Please pay attention to copyright note DIN ISO 16016*"

Mouser Electronics

Authorized Distributor

Click to View Pricing, Inventory, Delivery & Lifecycle Information:

BOPLA:

96013225