SHEET 1 OF 1

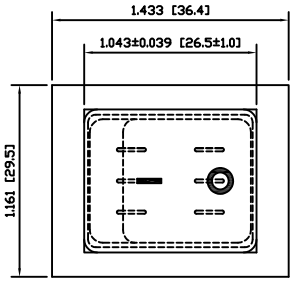

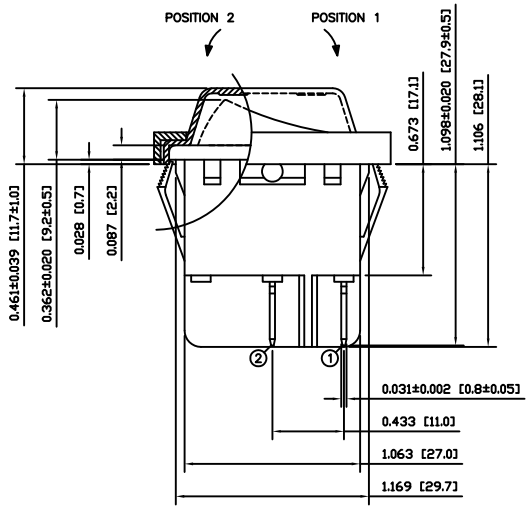

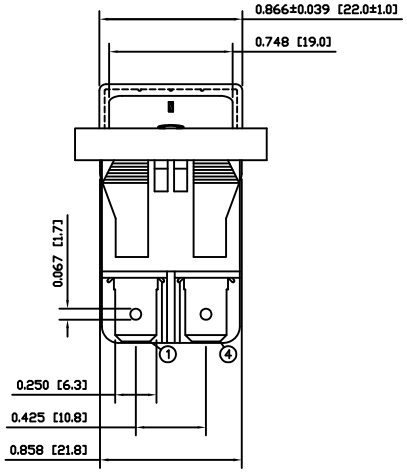

SCHEMATIC

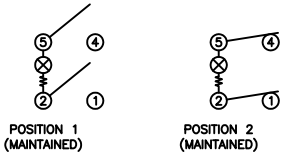

SPECIFICATIONS

FUNCTION:
2P1T OFF–ON

RATINGS:
ANSI/UL 1054 and CAN/CSA C22.2 No. 55 (E194579):
20A 125VAC [UR, cUR]
16A 125VAC 1/4HP [cURus]
16A 250VAC 1/4HP [cURus]
6.9A 250VAC 3/4HP [cURus]

ANSI/UL 1054 (233821):
16A 125VAC 1/4HP [CSAus]
16A 250VAC 1/4HP [CSAus]

EN 61058–1:2002 and DIN/VDE 0630–1:2003–03 (40017928):
16(8) 250V~ T125/55 1E4 [ENEC10, VDE]
10(2) 250V~ T125/55 5E4 [ENEC10, VDE]
16(4) 250V~ T125/55 1E4 [ENEC10, VDE]

ILLUMINATION VOLTAGE:
125V

CONTACT RESISTANCE:
Initial: 20mΩ Max.

INSULATION RESISTANCE:
100MΩ Min. at 500VDC

DIELECTRIC STRENGTH:
1,000VAC For 1 Minute

ELECTRICAL LIFE:
6,000 Cycles [cURus, CSAus]
10,000 Cycles [ENEC10, VDE: 16(8)A 250V~]
50,000 Cycles [ENEC10, VDE: 10(2)A 250V~]

TEMPERATURE:
–20°C to 65°C [cURus]
–20°C to 125°C [ENEC10, VDE]

APPROVALS:

RoHS COMPLIANT

COLORS AND MARKINGS

BODY:
Black

ACTUATOR:
Transparent Red

MARKING:
I/O Vertical (1)

MARKING COLOR:
White

FRAME:
Black

MATERIALS

BODY:
Polyamide 6/6 (PA66), UL94 V–2

ACTUATOR:
Polycarbonate (PC), UL94 V–2

LAMP CARRIER:
Polyamide 6/6 (PA66), UL94 V–2

LAMP:
Neon Bulb

SPRING:
Piano Wire

CONTACTS:
Silver Alloy

TERMINALS:
Silver Plated Copper
Silver Plated Brass

CAP:
Polyvinyl Chloride (PVC)

FRAME:
Polyamide 6/6 (PA66), UL94 V–2

SUGGESTED PANEL CUTOUT

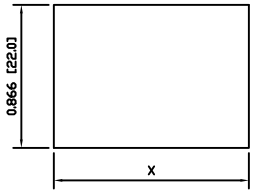

PANEL THICKNESS	X
0.030~0.049 [0.75~1.25]	1.189 [30.2]
0.049~0.079 [1.25~2.00]	1.200 [30.5]

REFERANCE	REV.	DATE	BY
ACTUATOR	A	09/07/02	CAB
BODY	A	09/07/06	CAB
COLORS	A	09/08/13	CAB
MATERIALS	A	09/07/06	CAB
SPECIFICATIONS	A	09/07/02	CAB

THE INFORMATION CONTAINED IN THIS DOCUMENT IS PROPRIETARY TO E–SWITCH AND IS NOT TO BE COPIED OR TRANSFERRED

REV.	DESCRIPTION	PCR	DATE	DRAWN BY
B	UPDATE DESCRIPTION	20355	12/21/11	BMA
A	INITIAL RELEASE	18893	10/02/22	CAB

DIMENSIONS: INCHES [MILLIMETERS]
GENERAL TOLERANCES: ±0.008 [±0.2] / ±1°
SCALE: DRAWING NOT TO SCALE
PROJECTION:

E•SWITCH® | LAMB INDUSTRIES

TITLE: RB242D1021–116ACCF021

ITEM NUMBER	DATE	REVISION
14–RB2S00045	FEBRUARY 22, 2010	B

Mouser Electronics

Authorized Distributor

Click to View Pricing, Inventory, Delivery & Lifecycle Information:

E-Switch:

RB242D1021-116/ACC-F02-1