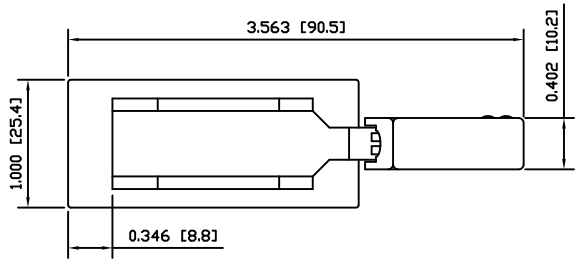

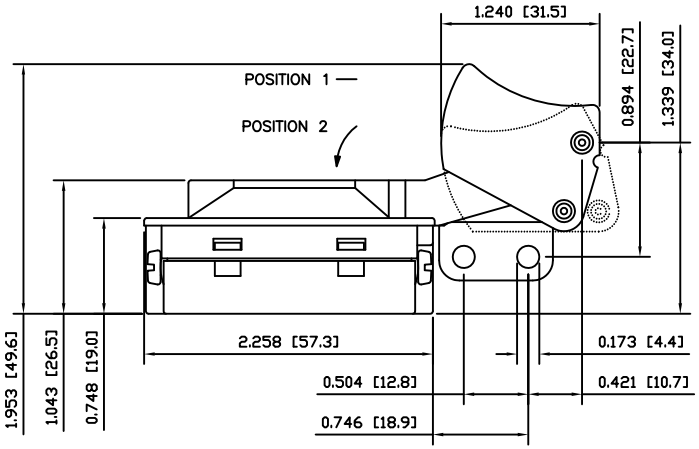

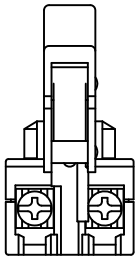

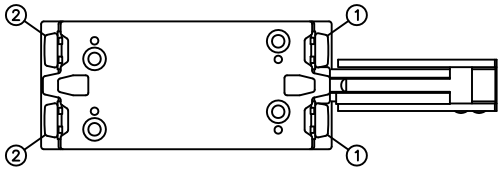

COLORS

BODY:
Black

ACTUATOR:
Black

LOCK:
None

SPECIFICATIONS

FUNCTION:
2P1T OFF–(ON)

RATINGS:
24A 125VAC
12A 250VAC
2HP 125/250VAC

OPERATING FORCE:
2.0kgf±0.5kgf at Highest Point

ELECTRICAL LIFE:
50,000 Cycles

TEMPERATURE:
Operating: 0°C to 55°C

APPROVALS:
RoHS
COMPLIANT

MATERIALS

LOWER BODY:
Phenolic (PF), UL94 V–0

UPPER BODY:
Polyamide 6/6 (PA66), UL94 V–0

ACTUATOR:
Polyamide 6/6 (PA66), UL94 V–0

ACTUATOR RIVET:
Copper

ACTUATOR LINK:
Polyamide 6/6 (PA66), UL94 V–0

PLATE:
Polyamide 6/6 (PA66), UL94 V–0

SEAL;
Nitrile Butibine Rubber (NBR), UL94 V–0

CONTACT HOLDER:
Polyamide 6/6 (PA66), UL94 V–0

MAIN SPRING:
Steel

SLIDERS:
Steel

MOBILE CONTACTS:
Silver Plated Brass

CONTACT SPRINGS:
Steel

CONTACTS:
Silver Alloy Clad Copper

TERMINALS:
Silver Palted Brass

TERMINAL SCREWS
Steel

TERMINAL HARDWARE:
Steel

GREASE:
Silicone Based Grease

SCHEMATIC

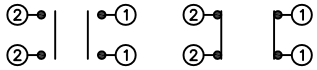

POSITION 1
(MAINTAINED)

POSITION 2
(MOMENTARY)

E SWITCH® | LAMB INDUSTRIES™

DIMENSIONS	INCHES [MILLIMETERS]
GENERAL TOLERANCES	±0.012 [±0.3] / ±1°
TITLE	HY38–6E8–021–000
SCALE	DRAWING NOT TO SCALE
PROJECTION	
ITEM NUMBER	34–HY386E8021000
DATE	NOVEMBER 8, 2013
REVISION	A

THE INFORMATION CONTAINED IN THIS DOCUMENT IS PROPRIETARY TO E–SWITCH AND IS NOT TO BE COPIED OR TRANSFERRED

REV.	DESCRIPTION	PCR	DATE	DRAWN BY
A	INITIAL RELEASE	21298	11/8/13	EBP

Mouser Electronics

Authorized Distributor

Click to View Pricing, Inventory, Delivery & Lifecycle Information:

E-Switch:

HY38-6E8-021-000