D2E146-HT67-39

AC centrifugal fan

forward-curved, dual-intake

with housing (flange)

ebm-papst Mulfingen GmbH & Co. KG
Bachmühle 2 · D-74673 Mulfingen
Phone +49 7938 81-0
Fax +49 7938 81-110
info1@de.ebmpapst.com
www.ebmpapst.com

Limited partnership · Headquarters Mulfingen
Amtsgericht (court of registration) Stuttgart · HRA 590344

General partner Elektrobau Mulfingen GmbH · Headquarters Mulfingen
Amtsgericht (court of registration) Stuttgart · HRB 590142

Nominal data

Type	**D2E146-HT67-39**
Motor	**M2E068-EC**

Phase		1~	1~
Nominal voltage	VAC	230	230
Frequency	Hz	50	60
Method of obtaining data		ml	ml
Valid for approval/standard		-	-
Speed (rpm)	min^{-1}	1850	2100
Power consumption	W	355	400
Current draw	A	1.55	1.75
Capacitor	µF	8	8
Capacitor voltage	VDB	450	450
Capacitor standard		S2 (CE)	S2 (CE)
Min. back pressure	Pa	0	200
Min. back pressure	in. wg	0	0.8
Min. ambient temperature	°C	-25	-25
Max. ambient temperature	°C	55	50
Starting current	A	1.8	1.9

ml = Max. load · me = Max. efficiency · fa = Free air · cs = Customer specification · ce = Customer equipment
Subject to change

AC centrifugal fan

forward-curved, dual-intake

with housing (flange)

Technical description

Weight	3.6 kg
Fan size	146 mm
Rotor surface	Partly cast in aluminum
Terminal box material	PP plastic, black
Impeller material	Sheet steel, hot-dip galvanized
Housing material	PP plastic, black
Motor suspension	Motor vibration-damped on both sides
Direction of rotation	Counterclockwise, viewed toward rotor
Degree of protection	IP20
Insulation class	"F"
Moisture (F) / Environmental (H) protection class	H0 - dry environment
Max. permitted ambient temp. for motor (transport/storage)	+ 80 °C
Min. permitted ambient temp. for motor (transport/storage)	- 40 °C
Installation position	Any
Condensation drainage holes	None
Mode	S1
Motor bearing	Ball bearing
Speed levels	4
Touch current according to IEC 60990 (measuring circuit Fig. 4, TN system)	< 0.75 mA
Electrical hookup	Via terminal box, capacitor integrated and connected; With plug
Motor protection	Thermal overload protector (TOP) internally connected
With cable	Variable
Protection class	I (with customer connection of protective earth)
Motor capacitor according to EN 60252-1 in safety protection class	S2
Conformity with standards	EN 60335-2-31
Approval	CSA C22.2 No. 113; UL 507

ebm-papst Mulfingen GmbH & Co. KG · Bachmühle 2 · D-74673 Mulfingen · Phone +49 (0) 7938 81-0 · Fax +49 (0) 7938 81-110 · info1@de.ebmpapst.com · www.ebmpapst.com

AC centrifugal fan

forward-curved, dual-intake

with housing (flange)

Product drawing

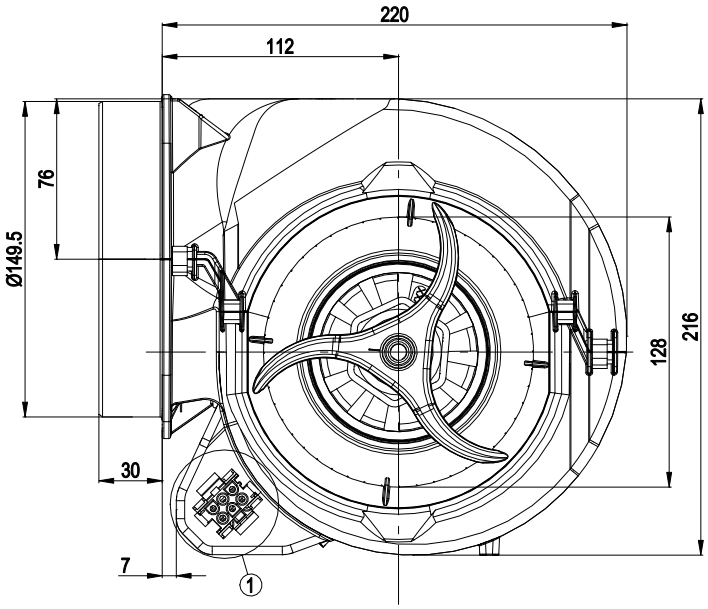

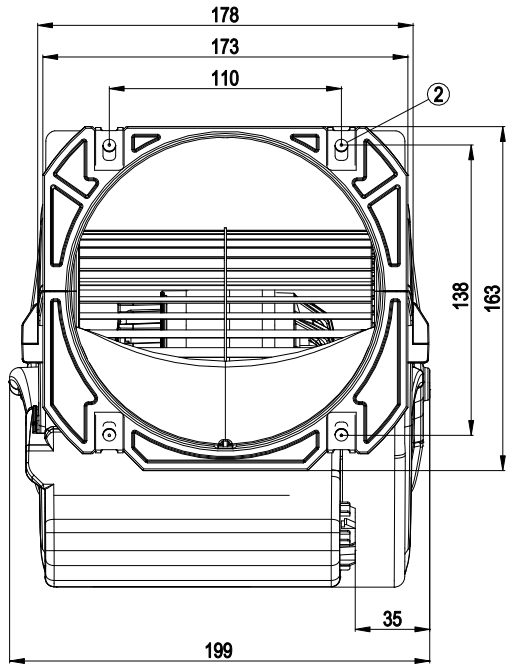

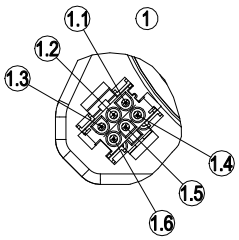

1	Coded plug-in system AMP Universal Mate-N-Lok; connector housing: AMP 926 682-3; 6x plug pin AMP 926 886-1
1.1	L = step 1
1.2	L = step 2
1.3	L = step 3
1.4	L = step 4
1.5	N
1.6	Protective earth
2	4x sheet metal nut for thread EN ISO 1478-ST4.8 (min. screw length 14.5 mm plus material thickness of mounting)

ebm-papst Mulfingen GmbH & Co. KG · Bachmühle 2 · D-74673 Mulfingen · Phone +49 (0) 7938 81-0 · Fax +49 (0) 7938 81-110 · info1@de.ebmpapst.com · www.ebmpapst.com

AC centrifugal fan

forward-curved, dual-intake

with housing (flange)

Connection diagram

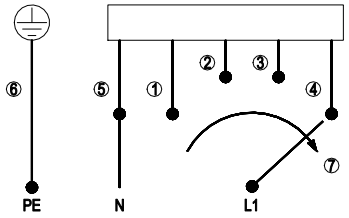

The switch must interrupt the circuit when switching.

1	Step 1 (min.)	2	Step 2	3	Step 3
4	Step 4 (max.)	5	N	6	PE protective earth
7	Speed increasing				

ebm-papst Mulfingen GmbH & Co. KG · Bachmühle 2 · D-74673 Mulfingen · Phone +49 (0) 7938 81-0 · Fax +49 (0) 7938 81-110 · info1@de.ebmpapst.com · www.ebmpapst.com

AC centrifugal fan

forward-curved, dual-intake

with housing (flange)

Curves: Air performance 50 Hz

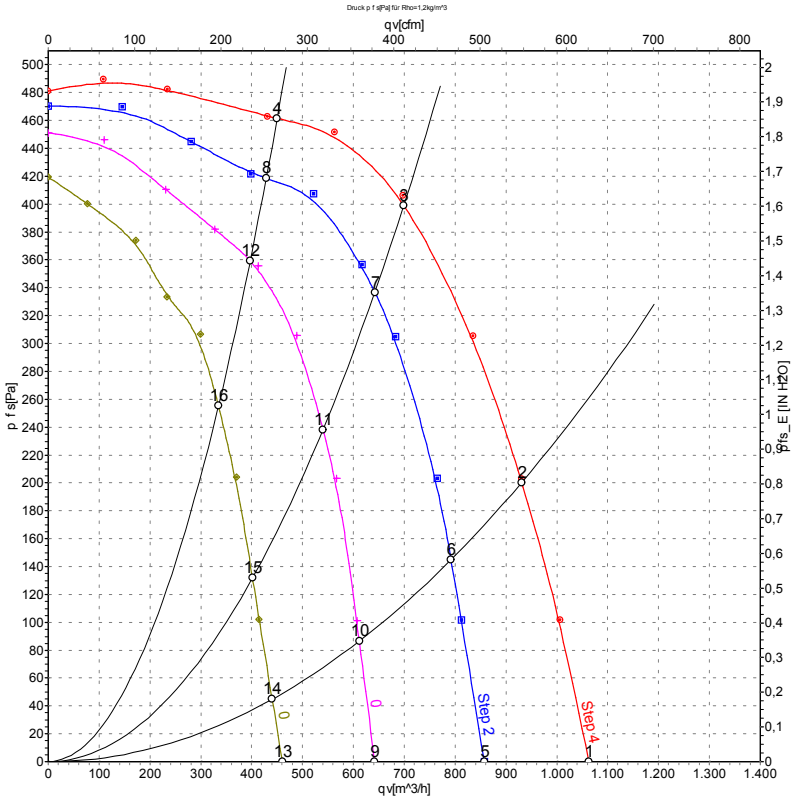

Measurement: LU-45713-1
Measurement: LU-45715-1
Measurement: LU-45717-1
Measurement: LU-45719-1

Air performance measured according to ISO 5801 installation category A. For detailed information on the measurement setup, contact ebm-papst. Intake sound level: Sound power level according to ISO 13347 / sound pressure level measured at 1 m distance from fan axis. The values given are valid under the specified measuring conditions and may vary due to conditions of installation. For deviations from the standard configuration, the parameters have to be checked on the installed unit.

Measured values

	Stage	U	f	n	P_e	I	q_V	p_{fs}	q_V	p_{fs}
		V	Hz	min^{-1}	W	A	m^3/h	Pa	cfm	in. wg
1	4	230	50	1850	355	1.55	1060	0	625	0.00
2	4	230	50	2150	318	1.38	930	200	550	0.80
3	4	230	50	2435	268	1.16	700	400	410	1.61
4	4	230	50	2610	227	0.99	450	460	265	1.85
5	3	230	50	1550	286	1.27	855	0	505	0.00
6	3	230	50	1850	261	1.18	790	145	465	0.58
7	3	230	50	2235	222	1.03	640	337	380	1.35
8	3	230	50	2515	179	0.87	430	418	250	1.68
9	2	230	50	1195	233	1.06	640	0	380	0.00
10	2	230	50	1455	222	1.02	610	88	360	0.35
11	2	230	50	1890	196	0.94	540	239	320	0.96
12	2	230	50	2315	158	0.81	395	360	235	1.45
13	1	230	50	875	195	0.89	460	0	270	0.00
14	1	230	50	1055	191	0.88	440	45	260	0.18
15	1	230	50	1420	179	0.84	400	132	235	0.53
16	1	230	50	1965	151	0.76	335	255	195	1.02

U = Power supply · f = Frequency · n = Speed (rpm) · P_e = Power consumption · I = Current draw · q_V = Air flow · p_{fs} = Pressure increase

ebm-papst Mulfingen GmbH & Co. KG · Bachmühle 2 · D-74673 Mulfingen · Phone +49 (0) 7938 81-0 · Fax +49 (0) 7938 81-110 · info1@de.ebmpapst.com · www.ebmpapst.com

AC centrifugal fan

forward-curved, dual-intake

with housing (flange)

Curves: Air performance 60 Hz

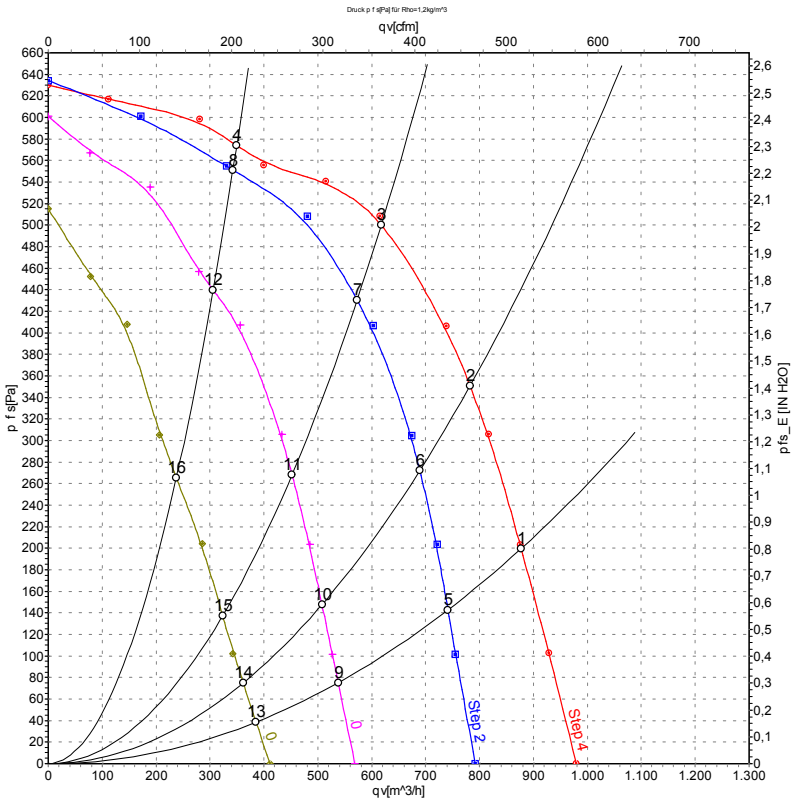

Measurement: LU-45714-1
Measurement: LU-45716-1
Measurement: LU-45718-1
Measurement: LU-45720-1

Air performance measured according to ISO 5801 installation category A. For detailed information on the measurement setup, contact ebm-papst. Intake sound level: Sound power level according to ISO 13347 / sound pressure level measured at 1 m distance from fan axis. The values given are valid under the specified measuring conditions and may vary due to conditions of installation. For deviations from the standard configuration, the parameters have to be checked on the installed unit.

Measured values

	Stage	U	f	n	P_e	I	q_V	p_{fs}	q_V	p_{fs}
		V	Hz	min^{-1}	W	A	m^3/h	Pa	cfm	in. wg
1	4	230	60	2100	400	1.75	875	200	515	0.80
2	4	230	60	2360	384	1.67	780	350	460	1.41
3	4	230	60	2685	360	1.58	620	500	365	2.01
4	4	230	60	2935	335	1.48	350	575	205	2.31
5	3	230	60	1780	296	1.37	740	143	435	0.57
6	3	230	60	2085	284	1.34	690	273	405	1.10
7	3	230	60	2495	260	1.29	575	432	335	1.73
8	3	230	60	2870	226	1.22	345	552	200	2.22
9	2	230	60	1325	228	1.10	540	75	315	0.30
10	2	230	60	1560	222	1.09	510	148	300	0.59
11	2	230	60	1990	210	1.07	450	268	265	1.08
12	2	230	60	2575	181	1.02	305	439	180	1.76
13	1	230	60	950	187	0.92	385	38	225	0.15
14	1	230	60	1105	185	0.91	360	74	215	0.30
15	1	230	60	1400	180	0.90	325	137	190	0.55
16	1	230	60	1985	165	0.88	240	265	140	1.06

U = Power supply · f = Frequency · n = Speed (rpm) · P_e = Power consumption · I = Current draw · q_V = Air flow · p_{fs} = Pressure increase

ebm-papst Mulfingen GmbH & Co. KG · Bachmühle 2 · D-74673 Mulfingen · Phone +49 (0) 7938 81-0 · Fax +49 (0) 7938 81-110 · info1@de.ebmpapst.com · www.ebmpapst.com

Mouser Electronics

Authorized Distributor

Click to View Pricing, Inventory, Delivery & Lifecycle Information:

ebm-papst:
D2E146-HT67-39