This product, formerly sold by ams AG, and before that optionally by either Applied Sensors GmbH, acam-messelectronic GmbH or Cambridge CMOS Sensors, is now owned and sold by

ScioSense

The technical content of this document under ams / Applied Sensors / acam-messelectronic / Cambridge CMOS Sensors is still valid.

Contact information

Headquarters:

Sciosense B.V.

High Tech Campus 10

5656 AE Eindhoven

The Netherlands

info@sciosense.com

www.sciosense.com

Demo Kit Manual

AS3933

Standard Board

AS3933 DEV SYSTEM

Table of Contents

1 Introduction ... 4
1.1 Kit Content ... 4
2 Getting Started ... 4
3 Hardware Description ... 4
3.1 AS3933 Demoboard ... 4
3.2 125 kHz Wake-up Transmitter Board ... 6
4 Software Description ... 7
4.1 Installing the GUI ... 7
4.2 Description of the GUI of the Receiver ... 8
4.2.1 Channel Enable ... 8
4.2.2 Low Power Mode ... 8
4.2.3 Clock Generator ... 9
4.2.4 Calibrate RC Oscillator ... 9
4.2.5 Antenna Damper ... 9
4.2.6 Envelope Detector Time Constant ... 9
4.2.7 Data Slicer ... 9
4.2.8 Comparator Hysteresis ... 9
4.2.9 Gain Reduction ... 9
4.2.10 Frequency Detection Tolerance ... 9
4.2.11 General Settings ... 10
4.2.12 Wakeup Pattern (Manchester) ... 10
4.2.13 Correlator ... 10
4.2.14 Automatic Time-Out ... 10
4.2.15 Clear Wake ... 11
4.2.16 Symbol Rate ... 11
4.2.17 Check Resonance Frequency ... 11
4.2.18 Input Capacitor Bank ... 11
4.2.19 Artificial Wakeup ... 11
4.2.20 Clear False Wakeup ... 11
4.2.21 Reset RSSI ... 11
4.3 Description of the GUI of the Transmitter ... 12
4.3.1 Duration of the Carrier Burst ... 12
4.3.2 Number of Preamble Symbols ... 12
4.3.3 Symbol Rate ... 12

4.3.4 Enable Buzzer 12
4.3.5 Wakeup Pattern (Manchester) 13
4.3.6 Manchester Pattern Length 13
4.3.7 Correlator 13
5 Schematics, Layers and BOM 14
5.1 AS3933 Demoboard Schematic 14
5.2 AS3933 Demoboard Layout 15
5.3 AS3933 Demoboard BOM 16
5.4 125 kHz Wake-up Transmitter Board Schematics 17
5.5 125 kHz Wake-up Transmitter Board Layout 17
5.6 125 kHz Wake-up Transmitter Board BOM 18
6 Ordering & Contact Information 19
7 Copyrights & Disclaimer 20
8 Revision Information 21

1 Introduction

With the AS3933 Demoboard it is possible to demonstrate the chip's features as described in the AS3933 datasheet. The 125kHz Wake-up Transmitter Board is included to offer the user a complete system for evaluation purposes. This application note describes the operation of the two boards and gives details on the hardware and software implemented in the demokit.

1.1 Kit Content

The kit comprises

- 1x 125kHz Wake-up Transmitter Board
- 1x AS3933 Demoboard
- 2x CR2032 coin cells
- 1x USB cable
- 1x USB stick

2 Getting Started

- Connect the +9V DC power supply F to the 125kHz Wake-up Transmitter Board.
- Insert the +3V battery at H of the AS3933 Demoboard
- Turn on the AS3933 Demoboard via the ON/OFF-Switch C. All LEDs flash up once.
- Start transmitting wake-up patterns via AUTO E of PATTERN B.
- As soon as the AS3933 Demoboard receives a wake-up pattern the RSSI LEDs flash up for 0.5s and show the momentary received signal strength. At the same time the X, Y, or Z LED flash up indicating which channel receives the strongest signal.

3 Hardware Description

3.1 AS3933 Demoboard

Figure 1: AS3933 Demoboard Top and Bottom

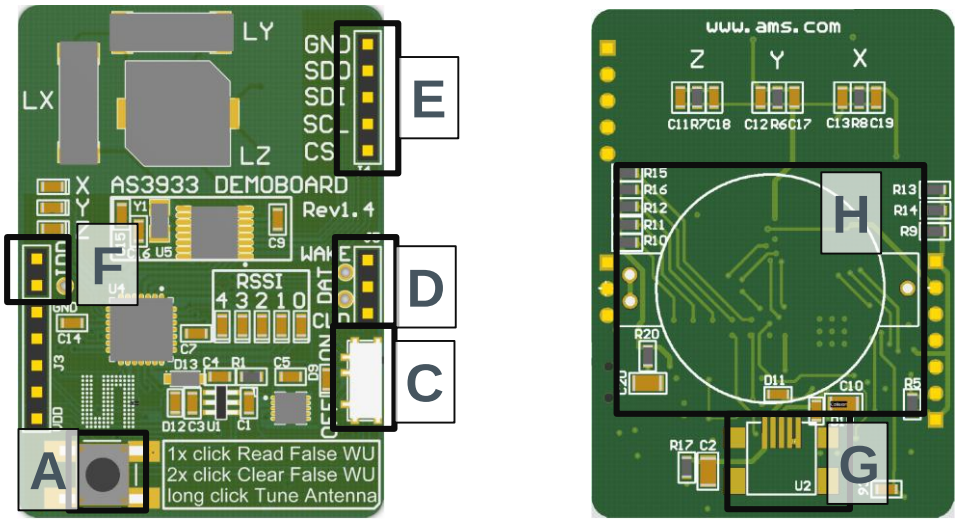

Figure 2: User Interface Description

Label	Name	Description	Info

Label	Name	Description	Info
A	BUTTON	Long press (1.5s) tunes the antenna	Each axis (X,Y, and Z) of the LF antenna can be tuned exactly to 125kHz. The resonance frequency of each channel can be read out via the GUI.
		1x short press reads the false wake-ups	The number of false wake-ups can be read out and displayed via the RSSI-LEDs.
		2x short press (double click) clears the false wake-ups	Pressing FALSE WAKEUP twice in quick succession resets the number of false wake-ups. Each RSSI-LED lights up shortly.
C	ON/OFF	ON/OFF-Switch	Power on/off the Demoboard. Source (battery or USB) is automatically detected.
G	USB-Connector	Mini USB 5-pin Connector	USB interface for GUI.
H	CR2032 Battery	Battery Holder	Insert CR2032 coin cell here.

Figure 3: Indication LEDs

LED	Color	Info
RSSI (5 bit)	Red LEDs	Received Signal Strength Indication. Displays the actual received signal strength whenever a WAKEUP occurs. When pressing FALSE WAKEUP these LEDs display the number of false wake-ups that occurred.
X	Red LED	Strongest wake-up signal received on channel 1 (X)
Y	Red LED	Strongest wake-up signal received on channel 2 (Y)
Z	Red LED	Strongest wake-up signal received on channel 3 (Z)

Figure 4: Jumper Description

Jumper	Name	Description	Info
F	IDD	Supply Current	The supply current of the AS3933 can be measured here. Set this jumper for normal operation.
D	AS3933 specific outputs		
	D1	WAKE	Wake Output Interrupt
	D2	DAT	Data Output
	D3	CL_DAT	Manchester Recovered Clock
E	Microcontroller interface		The SDI interface from the microcontroller can be replaced by a proprietary solution
	E1	CS	Serial Digital Interface Chip Select
	E2	SCL	Serial Digital Interface Clock
	E3	SDI	Serial Digital Interface Input

Jumper	Name	Description	Info
	E4	SDO	Serial Digital Interface Output
	E5	GND	Ground (0V)

Note: When the AS3933 Demoboard is connected to the GUI it is necessary to RESET the device by turning the AS3933 off and on via switch C. Another possibility to prepare the Demoboard for USB connection is to press buttons A and B simultaneously before connecting the USB cable.

3.2 125 kHz Wake-up Transmitter Board

Figure 5: 125kHz Wake-up Transmitter Board

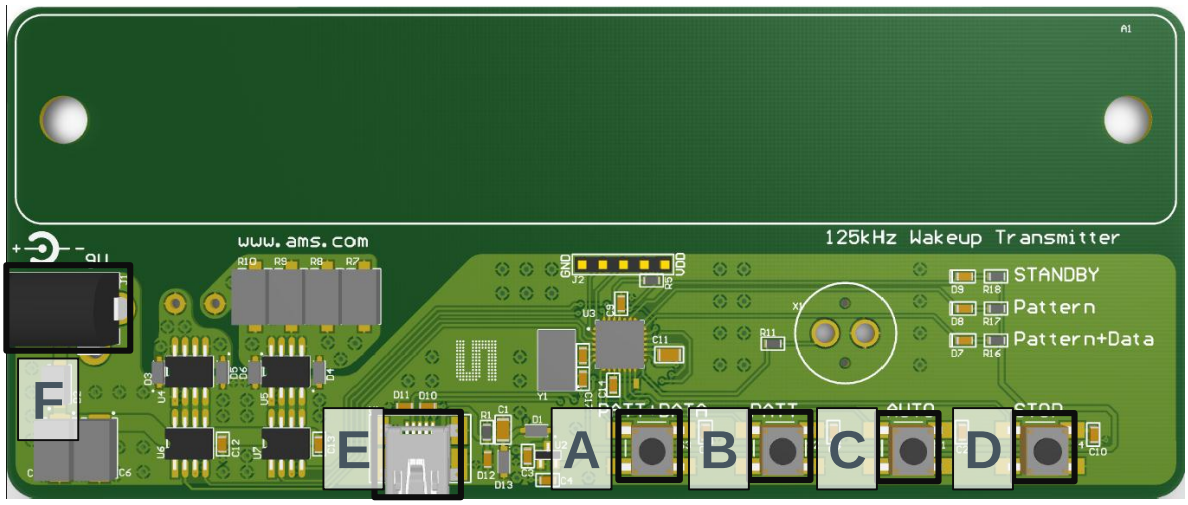

Figure 6: User Interface Description

Label	Name	Description	Info
A	PATT+DATA	Pattern+Data – Button	The transmitter continuously sends the wake-up pattern plus data (01010101).
B	PATT	Single-Pattern – Button	The transmitter sends a single wake-up pattern.
C	AUTO	Automatic Pattern – Button	The transmitter sends a wake-up pattern every 1s.
D	STOP	Stop Pattern – Button	The transmitter stops transmitting.
E	USB-Connector	Mini USB 5-pin connector	USB interface for the GUI.
F	Power Supply	+9V/2A DC Power Supply	Insert main power adapter here.

Figure 7: Indication LEDs/ Buzzer

LEDs	Color	Info
G	Buzzer	The buzzer signals whenever a wake-up pattern is transmitted. This

LEDs	Color	Info
		feature makes range measurements easier. The buzzer can be disabled via the GUI.
STANDBY	Red LED	Transmitter is on stand-by. No wake-up pattern is sent.
Pattern	Red LED	Wake-up pattern is transmitted.
Pattern+Data	Red LED	Wake-up pattern plus data is transmitted.

Note: Before connecting the 125kHz Wake-up Transmitter Board to the GUI the transmission of wake-up patterns needs to be terminated by pressing button D.

4 Software Description

4.1 Installing the GUI

- Execute the AS3933_EvalSW.msi
- Follow the installation guide
- Run the GUI → AS3933_EvalSW.exe

Note: Before connecting the 125 kHz Wake-up Transmitter Board to the GUI press button D to stop transmitting wake-up patterns.

4.2 Description of the GUI of the Receiver

Figure 8: Graphical User Interface of the AS3933 Demoboard

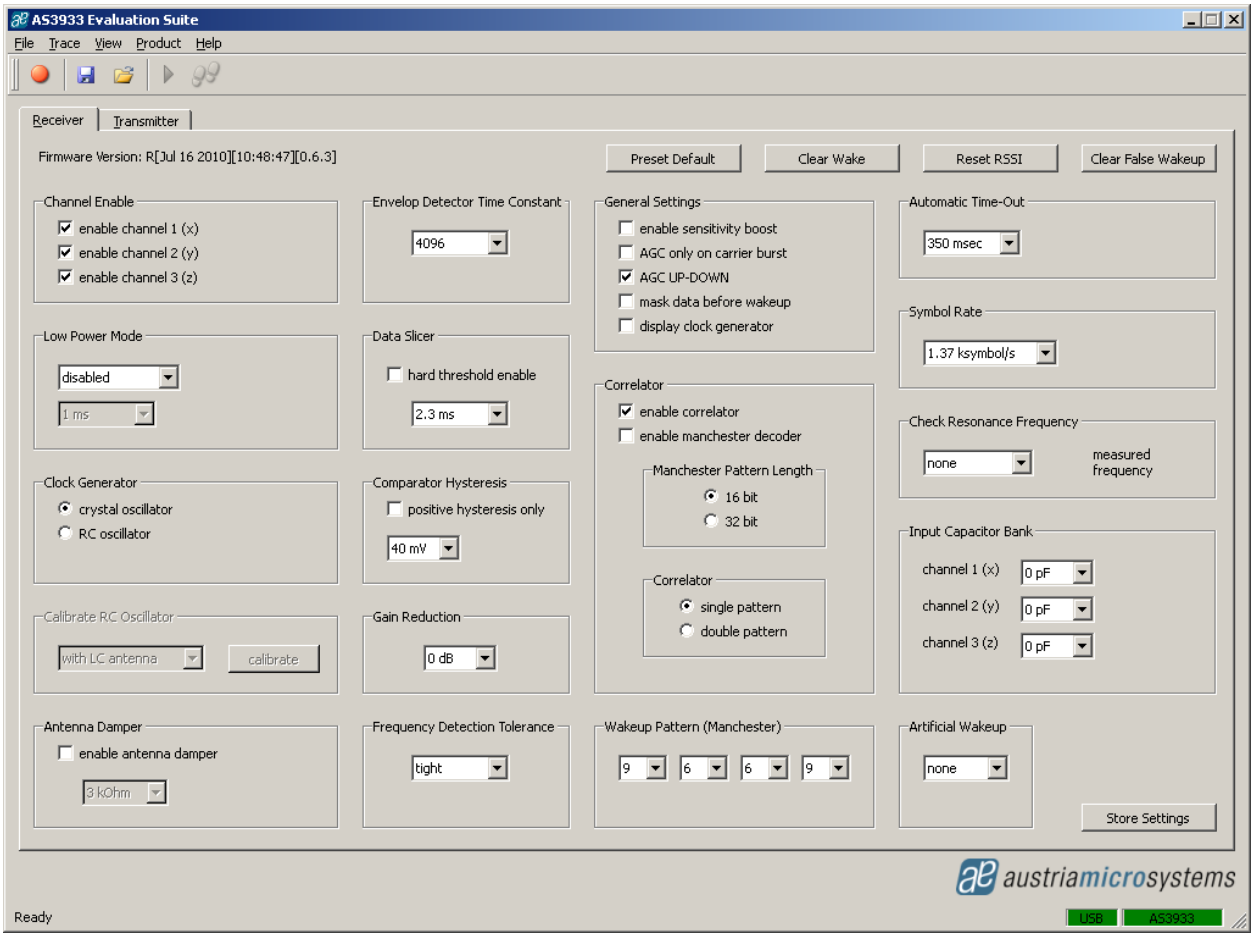

All adjustments can be saved via *Store Settings* in the lower right corner of the Receiver tab. If all settings should be reset to the default configuration push the button *Preset Default*. All configurations that are set by the GUI correspond to the Register Map of the AS3933. The Register Map can be viewed via View/Register Map (Ctrl+M). All registers can be updated manually via File/Readout Registers (Ctrl+R) or the update of the registers is done automatically via File/Automatic Update (Ctrl+U).

Note: A possible firmware update can be done via Help/Firmware Update (Ctrl+F). Load the latest *.bin file and update the firmware.

4.2.1 Channel Enable

The AS3933 Demoboard has a three dimensional antenna. Each of the three antenna inputs can be enabled or disabled.

4.2.2 Low Power Mode

The AS3933 features two low power modes, which can be selected here. By default no power saving mode is enabled which means that all channels are active all the time. For details on the low power modes please see the AS3933.

4.2.3 Clock Generator

The clock source for the AS3933 can be selected here. The AS3933 Demoboard has an on-board crystal oscillator that is used by default. In case the RC oscillator is used it can be calibrated to achieve a higher precision.

4.2.4 Calibrate RC Oscillator

The RC oscillator can be calibrated via the microcontroller or the LC antenna.

4.2.5 Antenna Damper

The antenna can be damped in order to limit the range. Therefore a resistor inside the AS3933 is switched into parallel to the antenna. The value of the resistor can be selected between 1kΩ to 27kΩ.

4.2.6 Envelope Detector Time Constant

The performance of the Demodulator can be optimized according to the bit rate and preamble length. For a higher bit rate the time constant needs to decrease. Adjust the Envelope Detector's time constant according to your symbol rate. The recommended time constants for different symbol rates are listed in the datasheet.

4.2.7 Data Slicer

There are two possibilities to set the threshold level for the Data Slicer: the dynamic threshold and the absolute threshold. The absolute threshold is set by selecting the *hard threshold enable* bit. In quit environments (no noise sources present) the absolute threshold can be reduced by additionally setting the *hard threshold reduction* bit. The dynamic threshold is enabled automatically when the *hard threshold enable* bit is not set.

In case the dynamic threshold is enabled the noise immunity of the Data Slicer can be adjusted via the Data Slicer time constant. Increasing this time constant will result in improved noise immunity only if the minimum preamble length is also adjusted. Therefore, it is not possible to select a specific Data Slicer time constant in the GUI but different minimum preamble lengths. The Data Slicer's time constant is internally linked to this setting. The recommended minimum preamble lengths for different Data Slicer time constants are listed in the datasheet.

4.2.8 Comparator Hysteresis

The Data Slicer's comparator hysteresis can be adjusted between 20mV and 40mV. Furthermore, the data slicer hysteresis can be active for either only positive edges or for both (positive and negative) edges.

4.2.9 Gain Reduction

The Gain Reduction of the channel amplifier can be selected between 0dB up to -24dB. When the setting *AGC UP-DOWN* is selected the maximum achievable gain is also defined by this setting.

4.2.10 Gain Reduction

The Frequency Detection Tolerance can be tighter or more relaxed. For details please see the datasheet.

4.2.11 General Settings

- Enable sensitivity boost: The channel amplifier gain is boosted to +3dB.
- AGC only on carrier burst: The automatic gain control is acting only on the first carrier burst.
- AGC UP-DOWN: The automatic gain control is operating in both directions (up and down). At the beginning the gain of the channel amplifier is set to the maximum and the AGC reduces it according to the received signal input level. If AGC UP-DOWN is disabled the AGC can only decrease the gain for the whole duration of the data reception. In this mode the system holds the RSSI peak.
- Mask data before wakeup: During the pattern correlation it is possible to display the data (received preamble + pattern) on the DAT pin, if this bit is disabled. Otherwise, this will be masked. In case the user decides to mask the data before the generation of the interrupt on the pin WAKE, then the data will be displayed only after the generation of the interrupt.
- Display clock generation: The clock generator output signal is displayed on CL_DAT pin.

4.2.12 Wakeup Pattern (Manchester)

Select the wake-up pattern here. Each field defines 4 bit. If the transmitted pattern matches the selected pattern, a wake-up interrupt is generated at the WAKE pin. The WAKE pin goes high.

4.2.13 Correlator

- Enable Correlator: If the Correlator is enabled the chip searches first for the preamble bits and then for data pattern (Manchester encoded wake-up pattern). Should the pattern correlation be disabled, the AS3933 goes directly into the data receiving mode.
- Enable Manchester decoder: If the Manchester decoder is enabled the data on the DAT pin can be directly read binary. In addition, the recovered clock is presented on the CL_DAT pin.
- Manchester Pattern Length: the Manchester pattern length can be selected between 16bit and 32bit. The possible selection of the wake-up pattern (Manchester) is changed accordingly.
- 16 bit pattern length: Each field of the wake-up pattern defines 4 bit, which are directly Manchester encoded.
- Example: 9 6 6 9 (Manchester) → 1001 0110 0110 1001 (binary, Manchester conform); sum = 16bit
- 32 bit pattern length: Each field of the wake-up pattern identifies 4 bit, which are hexadecimal encoded. Each bit defines one Symbol and is converted to Manchester by the microcontroller in the second step.
- Example: 7 B A 5 (Symbol) → 0111 1011 1010 0011 (binary) → 10010101 01100101 01100110 10100101 (binary Manchester conform); sum = 32 bit
- Single pattern: The wakeup pattern is sent as single string.
- Double pattern: The wakeup pattern is doubled.

4.2.14 Automatic Time-Out

The Automatic Time-Out resets the WAKE pin automatically after a certain time. This time can be selected between 0ms and 350ms.

4.2.15 Clear Wake

The Clear Wake button resets the WAKE pin manually.

4.2.16 Symbol Rate

The symbol rate can be adjusted between 512 Symbols/s and 4096 Symbols/s. The symbol sate defines the duration of one bit via the 32.768 kHz clock in order to recover the data.

4.2.17 Check Resonance Frequency

The resonance frequency of all three channels of the antenna can be measured. This helps in finding the correct capacitance to bring the LC circuit in resonance.

Note: It is important to reset this field to none in order to continue with other settings.

4.2.18 Input Capacitor Bank

The internal capacitor bank can be changed on each channel between 0pF and 32pF in order to tune the antenna to the desired resonance frequency. The AS3933 Demoboard provides a switch to tune the antenna automatically to 125 kHz. The internal capacitor bank is changed until the resonance frequency of 125 kHz is achieved. After this procedure the register map can be updated manually via File/Readout Registers (Ctrl+R) in order to see the added capacitors at each channel.

4.2.19 Artificial Wakeup

It is possible to enable the Artificial Wakeup with a wake-up period between 1s and 2 hours.

4.2.20 Clear False Wakeup

The false wake-up register counts the number of frequency detections that do not match the wake-up pattern. The actual number of false wake-ups can be deleted via the *Clear False Wakeup* button.

4.2.21 Reset RSSI

Reset the current RSSI measurement.

4.3 Description of the GUI of the Transmitter

Figure 9: Transmitter tab of the AS3933 GUI

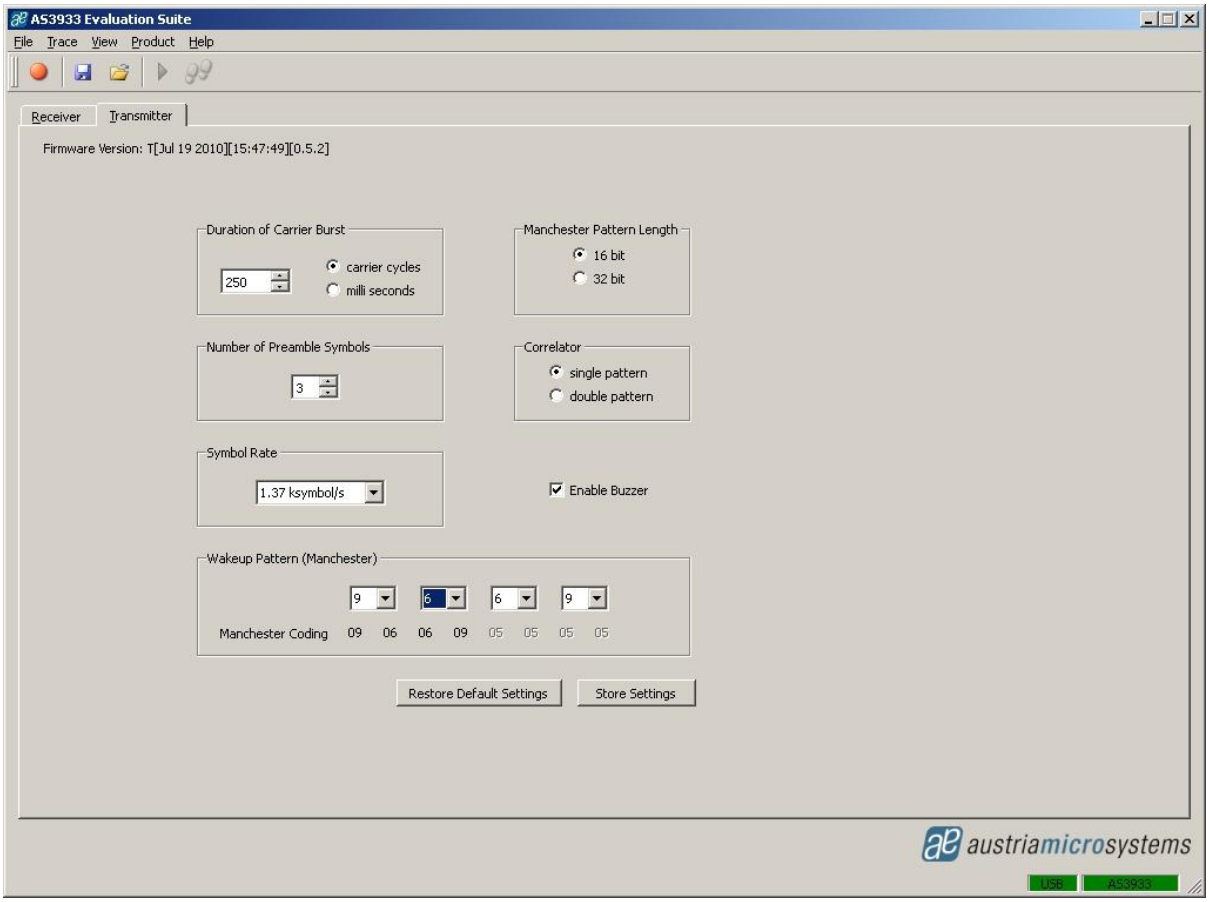

All adjustments can be saved via *Store Settings* in the lower right corner of the Transmitter tab. If all settings should be reset to the default configuration push the button *Restore Default Settings*.

4.3.1 Duration of Carrier Burst

The duration of the carrier burst can be set in multiples of carrier cycles (0-500 x 8µs) or in milliseconds (1-3).

4.3.2 Number of Preamble Symbols

The carrier burst must be followed by a separation bit and at least 3 symbols preamble. The actual number of preamble symbols can be adjusted here.

4.3.3 Symbol Rate

The symbol rate can be adjusted between 512 Symbols/s and 4096 Symbols/s. The symbol rate must be the same as at the settings made with the AS3933 Demoboard.

4.3.4 Enable Buzzer

The transmitter board sends out a tone whenever a packet is transmitted. This tone can be disabled here.

4.3.5 Wakeup Pattern (Manchester)

The wake-up pattern transmitted by the transmitter board must correlate to the wake-up pattern expected by the AS3933 Demoboard for successful wake-up generation. For more details on the wake-up pattern see section **Error! Reference source not found.**.

4.3.6 Manchester Pattern Length

Please see description above in section **Error! Reference source not found.**.

4.3.7 Correlator

Please see description above in section **Error! Reference source not found.**.

Note: It is important to note that the symbol rate, wake-up pattern, pattern length, and the Correlator have the same settings at the AS3933 Demoboard and the 125kHz Wake-up Transmitter Board. Otherwise the demoboard will not recognize the signal that is transmitted by the 125 kHz Wake-up Transmitter Board. If something does not work, restore the default settings at the demoboard and transmitter board.

5 Schematics, Layers and BOM

5.1 AS3933 Demoboard Schematics

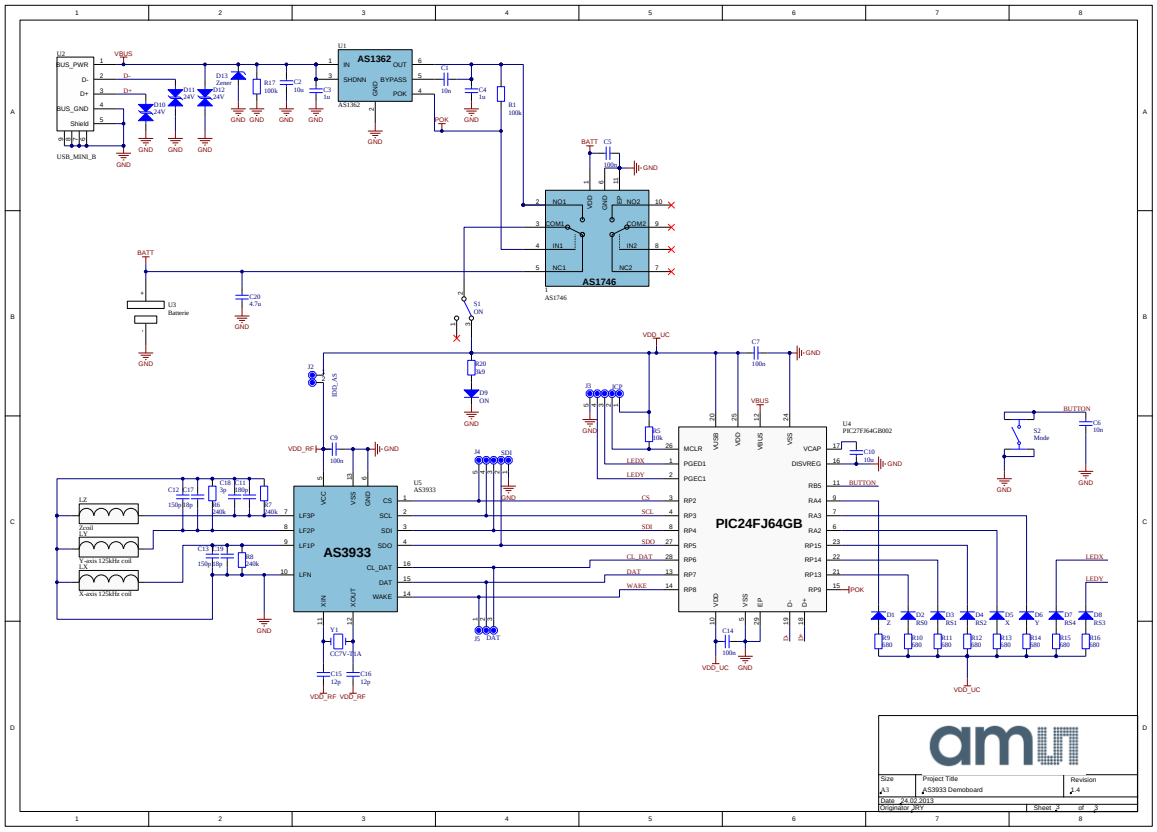

5.2 AS3933 Demoboard Layout

Figure 10: AS3933 Demoboard Layout –Top Layer

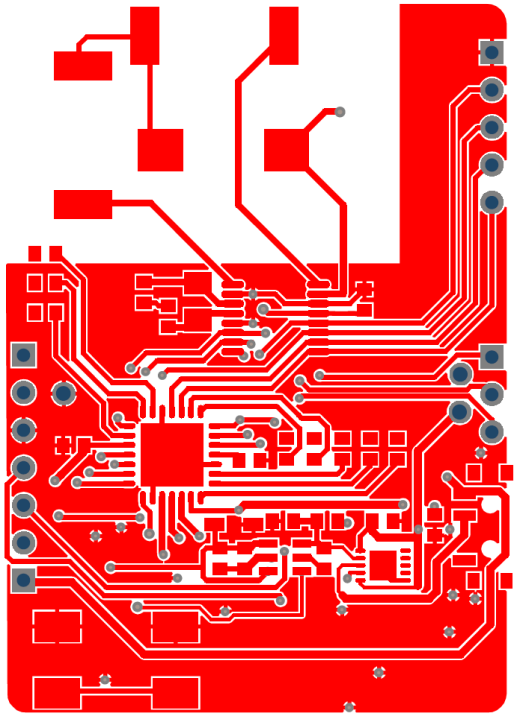

Figure 11:AS3933 Demoboard Layout – Bottom Layer

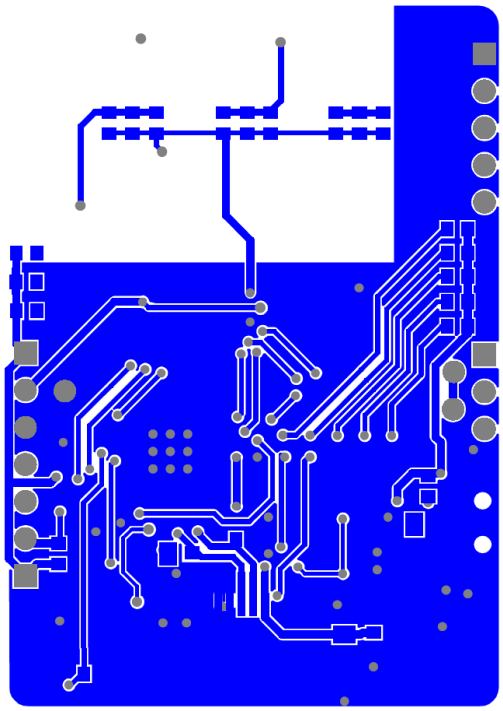

5.3 AS3933 Demoboard BOM

Bill of Materials

AS3933 Demoboard

Company:	ams AG
Originator:	JRY
PCB Name:	AS3933 Demoboard
PCB Version:	1.4
Report Date:	24.02.2013

#	Designator	Comment	Component_Description	Manufacturer	Manufacturer Part Number	Quantity
1	1	AS1746	Dual SPDT Analog Switch	ams	AS1746-BTDT	1
2	C1, C6	10n	C0603/10V/X5R			2
3	C2, C10	10u	C0805/6.3V/X5R			2
4	C3, C4	1u	C0603/10V/X5R	Yageo	CC0603KRX5R6BB105	2
5	C5, C7, C9, C14	100n	C0603/10V/X5R			4
6	C11	180p	C0603/50V/COG/±2%	Murata	GRM1885C1H181GA01D	1
7	C12, C13	150p	C0603/50V/COG/±2%	Murata	GRM1885C1H151GA01D	2
8	C15, C16	12p	TDK -	TDK	C1608C0G1H120J080AA	2
9	C17, C19	18p	Multilayer Ceramic	Murata Electronics	GRM1885C1H180GA01D	2
10	C18	3p	C0603/50V/COG/±2%	Murata	GRM1885C1H3R0BZ01D	1
11	C20	4.7u	C0805/6.3V/X5R			1
12	D1	Z	SUPER Brightness Red	MULTICOMP	OVS-0608	1
13	D2	RS0	SUPER Brightness Red	MULTICOMP	OVS-0608	1
14	D3	RS1	SUPER Brightness Red	MULTICOMP	OVS-0608	1
15	D4	RS2	SUPER Brightness Red	MULTICOMP	OVS-0608	1
16	D5	X	SUPER Brightness Red	MULTICOMP	OVS-0608	1
17	D6	Y	SUPER Brightness Red	MULTICOMP	OVS-0608	1
18	D7	RS4	SUPER Brightness Red	MULTICOMP	OVS-0608	1
19	D8	RS3	SUPER Brightness Red	MULTICOMP	OVS-0608	1
20	D9, S1	ON	MULTICOMP - OVS-0608 -	MULTICOMP, C & K	OVS-0608, PCM12SMTR	2
21	D10, D11, D12	24V	COOPER BUSSMANN -	COOPER BUSSMANN	0603ESDA-TR1	3
22	D13	Zener	ON SEMICONDUCTOR -	ON SEMICONDUCTOR	MM3Z6V8T1G	1
23	J2	IDD_AS	2 pole pin header			1
24	J3	ICP	not assembled			1
25	J4	SDI	5 pole pin header			1
26	J5	DAT	3 pole pin header			1
27	LX	X-axis 125kHz coil	7.2mH +/- 5%@ 125kHz	Premo	SDTR1103-0720J	1
28	LY	Y-axis 125kHz coil	7.2mH +/- 5%@ 125kHz	Premo	SDTR1103-0720J	1
29	LZ	Zcoil	7.2mH +/-5%@ 125 kHz	Premo	ZC1003-0720J	1
30	R1, R17	100k	R0603/5%/0.1W			2
31	R5	10k	R0603/5%/0.1W			1
32	R6, R7, R8	240k	R0603/5%/0.1W			3
33	R9, R10, R11, R12, R13, R14,	680	R0603/5%/0.1W			8
34	R20	3k9	R0603/5%/0.1W			1
35	S2	Mode	TE CONNECTIVITY /	TE CONNECTIVITY /	FSM2JSMA	1
36	U1	AS1362	RF LDO, 3.0V/300mA	ams	AS1362-BTTT-30	1
37	U2	USB_MINI_B	CONN RECEPT MINI USB2.0	Hirose Electric Co Ltd	UX60A-MB-5ST	1
38	U3	Batterie	RENATA - HU2032-LF -	RENATA	HU2032-LF	1
39	U4	PIC27FJ64GB002	IC MCU 16BIT 64KB FLASH	Microchip Technology	PIC24FJ64GB002-I/ML	1
40	U5	AS3932	RFID PROG RX 15KHZ -	ams	AS3933-BTST	1
41	Y1	CC7V-T1A	MICRO CRYSTAL - CC7V-	MICRO CRYSTAL	CC7V-T1A 32.768KHZ +-20PPM 9PF	1
Approved			Notes			63

5.4 125 kHz Wake-up Transmitter Board Schematics

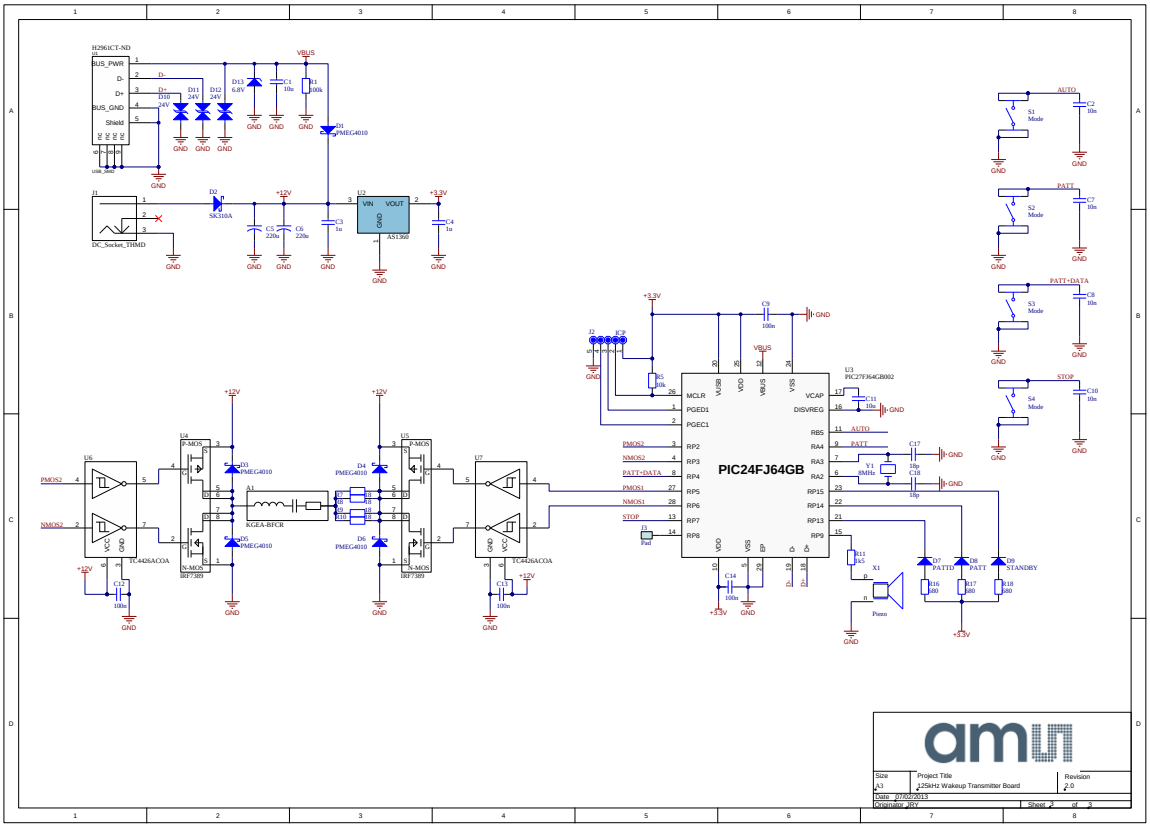

5.5 125 kHz Wake-up Transmitter Board Layout

Figure 12: 125 kHz Wake-up Transmitter Board Layout – Top Layer

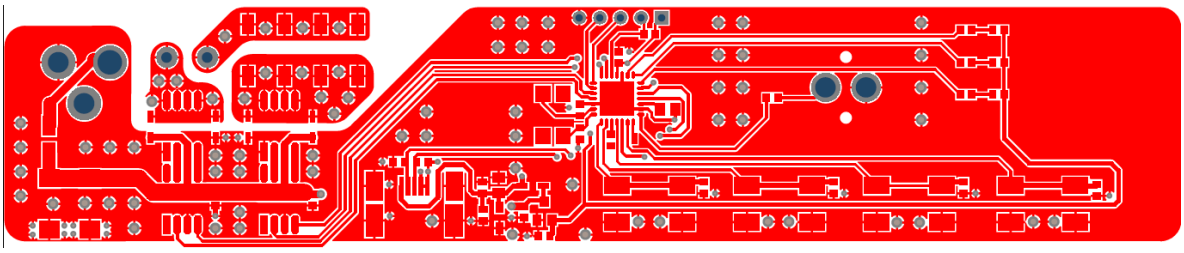

Figure 13: 125 kHz Wake-up Transmitter Board Layout – Bottom Layer

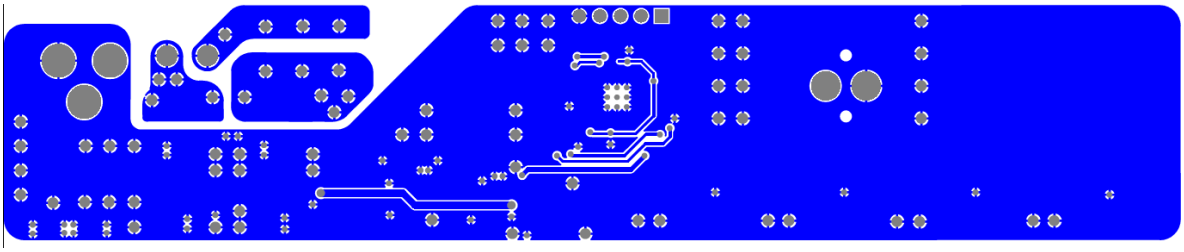

5.6 125 kHz Wake-up Transmitter Board BOM

Bill of Materials

125kHz Wakeup Transmitter Board

Company:	ams AG
Originator:	JRY
PCB Name:	125kHz Wakeup Transmitter Board
PCB Version:	2.0
Report Date:	07/02/2013

#	Designator	Comment	Component_Description	Manufacturer	Manufacturer Part Number	Quantity
1	A1	KGEA-BFCR	LF Antenna/KGEA-BFCR-B-			1
2	C1, C11	10u	C0805/16V/X5R			2
3	C2, C7, C8, C10	10n	C0603/10V/X5R			4
4	C3, C4	1u	MULTICOMP -	MULTICOMP	MC0603X105M160CT	2
5	C5, C6	220u	KEMET - T491D227K016ZT -	KEMET	T491D227K016ZT	2
6	C9, C12, C13, C14	100n	C0603/10V/X5R			4
7	C17, C18	18p	C0603/50V/X5R			2
8	D1, D3, D4, D5, D6	PMEG4010	NXP - PMEG4010CEJ,115 -	NXP	PMEG4010CEJ,115	5
9	D2	SK310A	TAIWAN SEMICONDUCTOR -	TAIWAN SEMICONDUCTOR	SK310A	1
10	D7	PATTD	MULTICOMP - OVS-0608 -	MULTICOMP	OVS-0608	1
11	D8	PATT	MULTICOMP - OVS-0608 -	MULTICOMP	OVS-0608	1
12	D9	STANDBY	MULTICOMP - OVS-0608 -	MULTICOMP	OVS-0608	1
13	D10, D11, D12	24V	COOPER BUSSMANN -	COOPER BUSSMANN	0603ESDA-TR1	3
14	D13	6.8V	ON SEMICONDUCTOR -	ON SEMICONDUCTOR	MM3Z6V8T1G	1
15	J1	DC_Socket_THMD	LUMBERG - NEB 21 R -	LUMBERG	NEB 21 R	1
16	J2	ICP	5 pole pin header/2.54mm			1
17	R1	100k	R0603/5%/0.1W			1
18	R5	10k	R0603/5%/0.1W			1
19	R7, R8, R9, R10	18	TE CONNECTIVITY / CGS -	TE CONNECTIVITY / CGS	SMW218RJT	4
20	R11	1k5	R0603/5%/0.1W			1
21	R16, R17, R18	680	VISHAY DRALORIC -	VISHAY DRALORIC	CRCW0603680RFKEAHP	3
22	S1, S2, S3, S4	Mode	TE CONNECTIVITY /	TE CONNECTIVITY /	FSM2JSMA	4
23	U1	USB_SMD	CONN RECEPT USB 5POS	Molex Connector	56579-0576	1
24	U2	AS1360	IC REG LDO 3.3V .15A	ams	AS1360-33-T	1
25	U3	PIC27FJ64GB002	MICROCHIP -	MICROCHIP	PIC24FJ64GB002-I/ML	1
26	U4, U5	IRF7389	INTERNATIONAL RECTIFIER -	INTERNATIONAL RECTIFIER	IRF7389TRPBF	2
27	U6, U7	MC33151	ON SEMICONDUCTOR -	ON SEMICONDUCTOR	MC33151DG	2
28	X1	Piezo	MURATA -	MURATA	PKM13EPYH4002-B0	1
29	Y1	8MHz	ABRACON - ABMM2-	ABRACON	ABMM2-8.000MHZ-E2-T	1
Approved			Notes			55

6 Ordering & Contact Information

Ordering Code	Description
AS3933 DEV SYSTEM	AS3933 Demo Kit Standard Board

Buy our products or get free samples online at:

www.ams.com/ICdirect

Technical Support is available at:

www.ams.com/Technical-Support

Provide feedback about this document at:

www.ams.com/Document-Feedback

For further information and requests, e-mail us at:

ams_sales@ams.com

For sales offices, distributors and representatives, please visit:

www.ams.com/contact

Headquarters
ams AG
Tobelbaderstrasse 30
8141 Unterpremstaetten
Austria, Europe

Tel: +43 (0) 3136 500 0
Website: www.ams.com

7 Copyrights & Disclaimer

Copyright ams AG, Tobelbader Strasse 30, 8141 Unterpremstaetten, Austria-Europe. Trademarks Registered. All rights reserved. The material herein may not be reproduced, adapted, merged, translated, stored, or used without the prior written consent of the copyright owner.

Demo Kits, Evaluation Kits and Reference Designs are provided to recipient on an “as is” basis for demonstration and evaluation purposes only and are not considered to be finished end-products intended and fit for general consumer use, commercial applications and applications with special requirements such as but not limited to medical equipment or automotive applications. Demo Kits, Evaluation Kits and Reference Designs have not been tested for compliance with electromagnetic compatibility (EMC) standards and directives, unless otherwise specified. Demo Kits, Evaluation Kits and Reference Designs shall be used by qualified personnel only.

ams AG reserves the right to change functionality and price of Demo Kits, Evaluation Kits and Reference Designs at any time and without notice.

Any express or implied warranties, including, but not limited to the implied warranties of merchantability and fitness for a particular purpose are disclaimed. Any claims and demands and any direct, indirect, incidental, special, exemplary or consequential damages arising from the inadequacy of the provided Demo Kits, Evaluation Kits and Reference Designs or incurred losses of any kind (e.g. loss of use, data or profits or business interruption however caused) as a consequence of their use are excluded.

ams AG shall not be liable to recipient or any third party for any damages, including but not limited to personal injury, property damage, loss of profits, loss of use, interruption of business or indirect, special, incidental or consequential damages, of any kind, in connection with or arising out of the furnishing, performance or use of the technical data herein. No obligation or liability to recipient or any third party shall arise or flow out of ams AG rendering of technical or other services.

8 Revision Information

Changes from 1-00 (2010-Jul-20) to current revision 1-02 (2014-Jul-11)		Page
1-01	Update to corporate format (2013-Feb-24)	
1-02	Update to corporate format	1-20

Note: Page numbers for the previous version may differ from page numbers in the current revision.

Mouser Electronics

Authorized Distributor

Click to View Pricing, Inventory, Delivery & Lifecycle Information:

ScioSense:

AS3933-DK