SYMBOL DEFINITION		
A DIMENSION WITHOUT AN INSPECTION REPORT SYMBOL ( ) DOES NOT REQUIRE INSPECTION. IT MAY BE CONTROLLED ON THE INDIVIDUAL COMPONENT DRAWING.	TOTAL NO OF INSPECTIONS REQUIRED	13
	LAST NO. USED	11

MISSING SYMBOLS

NO MISSING SYMBOL NUMBER

DWG STATUS					ZONE	REVISION HISTORY	AUTH	DR	APVD 1	APVD 2
DATE	STG	REV	N/P	CHG						
31MY06	R	01	-	-		ALL PARTS - REDRAWN TO PD	279436	JAR	JAA	WTM
13AU12	R	02	-	-		ALL PARTS - UPDATED MATERIAL CALLOUT	419206	CBG	CBG	MAA

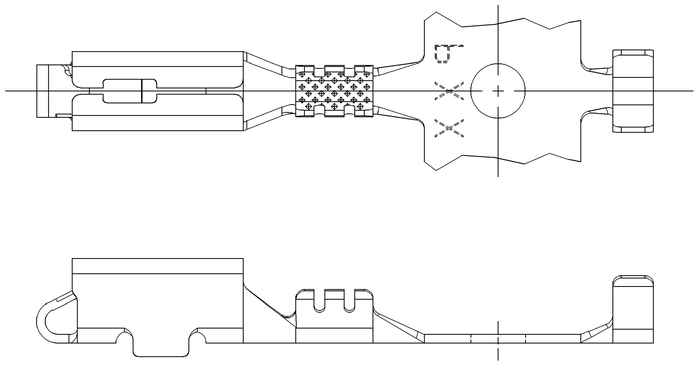

TYPE 102
SAME AS TYPE 101
EXCEPT AS SHOWN

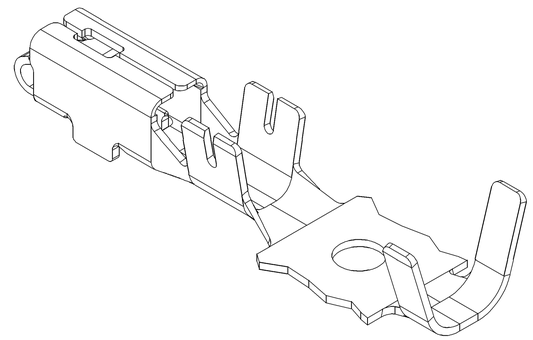

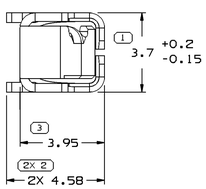

VIEW TO X-X

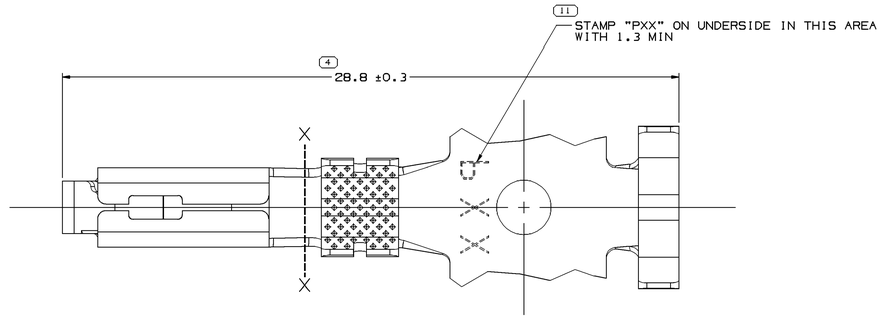

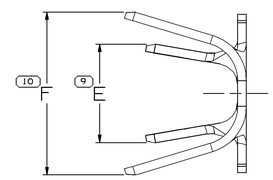

VIEW TO X-X

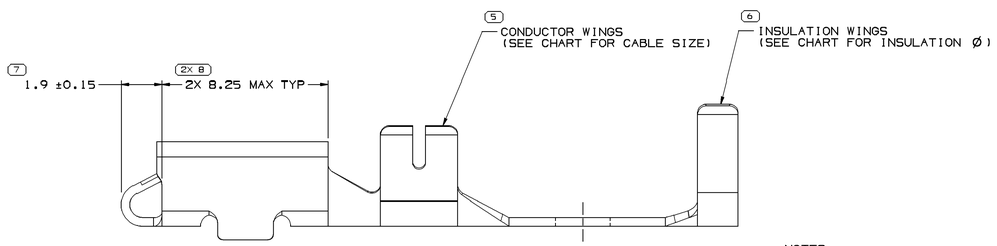

TYPE 101

NOTES

1. UNLESS OTHERWISE SPECIFIED AND/OR INDICATED:

   DIMENSIONS ARE TO FACE OF VIEW SHOWN AND AUTOMATICALLY ROUNDED BY COMPUTER FOR INSPECTION (SEE MATH MODEL FOR PRECISE DIMENSIONS). FOR ALL OTHER DIMENSIONS NOT SHOWN BUT REQUIRED FOR TOOL BUILD, SEE MATH MODEL FOR PRECISE TOOL PATH DATA.

3. REFERENCE MATING COMPONENTS OR EQUIVALENT:

   TERMINAL MINI FUSE 12092075
   RECOMENDED MATING BLADE 0.860/0.790 THK;
   2.9/2.7 WIDTH; 7 LENGTH

3. MAXIMUM CURRENT CAPACITY IS 30 AMPS.

4. DO NOT PROBE, TEST OR OTHERWISE CONTACT THE INTERIOR REGION (THE SPRING OR ANY MOVING PART) OF THIS TERMINAL. SEVERE DAMAGE CAN OCCUR, COMPROMISING THE PERFORMANCE OF THE ELECTRICAL INTERFACE.

PART NO	REV	N/P	STATUS	MAT'L SIZE	MAT'L SPEC	PART NO	REV	N/P	STATUS	MAT'L SIZE	MAT'L SPEC	SIZE (MM²)	DIA	ID	TYPE	E ±0.4	F ±0.4
UNPLATED						PLATED						CABLE					
						12110685	A2	-	-	0.406 X 34.39	TIN PLATED COOPER ALLOY	TWO 0.5	2.2-1.7	220	102	3.5	5.8
						12110664	A2	-	-	0.406 X 34.39	TIN PLATED COOPER ALLOY	TWO 0.35	TWO 2.1 MAX	222	102	2.7	5.3
						12110662	A2	-	-	0.406 X 34.39	TIN PLATED COOPER ALLOY	TWO 1-0.8	2.7-1.9	217	101	4.2	6.7
						12110647	C2	-	-	0.406 X 34.39	TIN PLATED COOPER ALLOY	5	4.48-3.72	10	101	4.6	7.6
						12110646	C2	-	-	0.406 X 34.39	TIN PLATED COOPER ALLOY	3-2	3.65-2.5	13	101	4	5.6
						12110645	C2	-	-	0.406 X 34.39	TIN PLATED COOPER ALLOY	1-0.8	2.64-1.96	17	102	2.9±0.2	4.6
						12110644	C2	-	-	0.406 X 34.39	TIN PLATED COOPER ALLOY	0.5-0.35	2.19-1.47	21	102	2.4±0.2	3.8±0.2

LINE DRAWN THROUGH # PART NUMBER INDICATES THAT PHYSICAL PARTS ARE NOT AVAILABLE FOR ORDERING.

PART NUMBERS THAT DO NOT HAVE A LINE PRESENT INDICATE THAT PHYSICAL PARTS ARE AVAILABLE FOR ORDERING.

CONTACT DELPHI SALES TO ASSURE AVAILABILITY OF PARTS.

DWG TYPE: PART DRAWING

STYLE

VOLUME (CM³)

DISTR CODE

UNLESS OTHERWISE SPECIFIED

THIS DOCUMENT IS IN ACCORDANCE WITH ASME Y14.5M-1994 AS AMENDED BY THE GM GLOBAL DIMENSIONING AND TOLERANCING ADDENDUM-2001. SEPARATE PATTERNS OF FEATURES MAY BE BASED SEPARATELY PER/PROCESS OF DATUM REFERENCES.

ALL DIMENSIONS ARE IN MILLIMETERS

(1) PROCESS SENSITIVE DIMENSION

REFERENCE

DIMENSIONS ENCLOSED IN ( ) INDICATE REFERENCE DIMENSIONS AND NO TOLERANCE LIMITS ARE ESTABLISHED

DIMENSIONAL RANGE (MM)		CHART D
FROM	0	>12
TO	12	
TOLERANCE UNLESS OTHERWISE SPECIFIED		
	±0.1	±0.2
ANGULAR TOLERANCE ±2°		

THIRD ANGLE PROJECTION

DO NOT SCALE

USE MATH DATA

NX

DELPHI

DELPHI PACKARD ELECTRICAL/ELECTRONIC ARCHITECTURE
WARREN, OH

COPYRIGHT 2006 DELPHI CORPORATION AND/OR ITS AFFILIATES.
ALL RIGHTS RESERVED.
REVISED
THIS DRAWING IS THE PROPERTY OF DELPHI CORPORATION. THE REPRODUCTION, DISTRIBUTION AND UTILIZATION OF THIS DOCUMENT OR ITS RELATED CAD MATH DATA, AS WELL AS COMMUNICATION OF ANY CONTENT TO OTHERS, WITHOUT EXPRESS AUTHORIZATION IS PROHIBITED.

		DATE
DR		
APVD1	JAIR ACEVEDO	31MY06
APVD2	J.S. ALVARADO	31MY06
APVD3	WILLIAM T. MADDEN	05JN06
APVD4		
APVD5		

SUBSTANCES OF CONCERN AND RECYCLED CONTENT PER DELPHI 10949001

MATERIAL: SEE CHART

DRAWING NAME: TAXI TERM F M/P 280 SN

DRAWING NUMBER: 12110643

SIZE	SCALE	FRAME NO	SHEET NO	STG	REV	N/P
A0	10:1	1 OF 1	1 OF 2	R	02	-

User: JTC054
Model: 12110643-CL001-S01
Date: 14-Aug-12 Time: 14:57
Template: tbdpdf

Mouser Electronics

Authorized Distributor

Click to View Pricing, Inventory, Delivery & Lifecycle Information:

Aptiv:
12110645-CT 12110646-CT