DELPHI AUTOMOTIVE SYSTEMS
JAMBEIRO, SP - BRAZIL

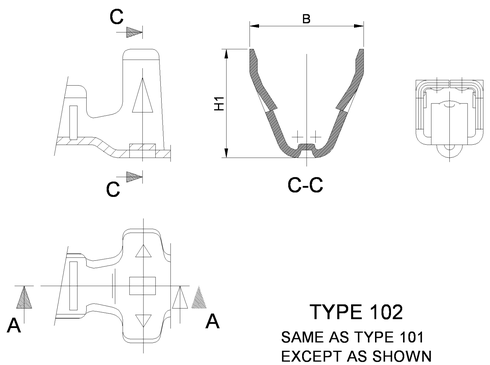

TYPE 102
SAME AS TYPE 101
EXCEPT AS SHOWN

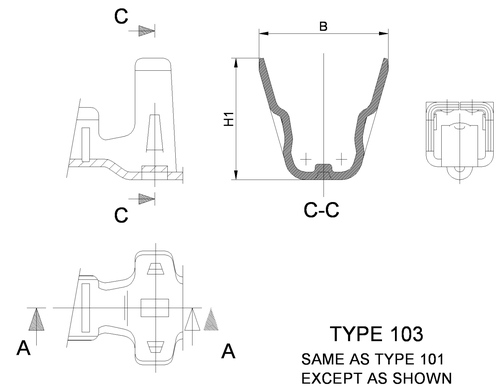

TYPE 103
SAME AS TYPE 101
EXCEPT AS SHOWN

DWG STATUS					ZONE	REVISION HISTORY	AUTH	DR	CK	APVD
DATE	STG	REV	CHG	N/P						
05DE01	-	001	-	-	---	PD DRAWING CREATION & TAXI WAS 15327501	-	POT	AIM	ASG
21JA02	-	002	-	-	---	UPDATE REVIEW SYSTEM	-	MWG	AIM	ASG
08SE03	-	003	-	-	---	TAXI WAS 15418761	-	POT	AIM	ASG
12MY04	-	04	-	-	-	ADD P/N 15491515 (TYPE 102) AND 15491516 (TYPE 103)	040504	POT	AIM	ASG
25JN04	-	05	-	-	-	UPDATE REVIEW SYSTEM	-	POT	AIM	ASG
10SE04	-	06	-	-	-	UPDATE REVIEW SYSTEM	-	POT	AIM	ASG
20OC04	-	07	-	-	-	UPDATE REVIEW SYSTEM	-	LMC	AIM	ASG
02MR05	-	08	-	-	-	UPDATE REVIEW SYSTEM	-	POT	AIM	ASG
13JN05	-	09	-	-	-	UPDATE REVIEW SYSTEM	-	ETG	AIM	ASG
30AU05	-	10	-	-	-	UPDATE REVIEW SYSTEM	-	ETG	POT	ASG
09MR06	-	11	-	-	-	UPDATE REVIEW SYSTEM	-	ETG	POT	ASG
22OC07	-	12	-	-	-	UPDATED 15491516 WING CONSTRUCTION	402734	SBH	JWG	SBH
						ADD ALTERNATIVE CONSTRUCTION PN 13663799				

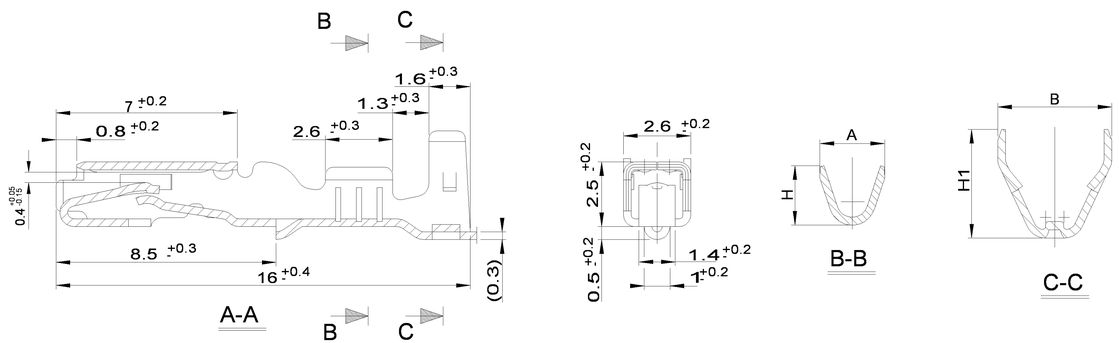

TYPE 101

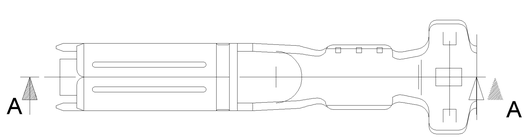

NOTES:

1. MATING PART OR EQUIVALENT:
   MALE TERMINAL 15327503.
2. 13663799 ONLY FOR CHINA

PART NO	EPEC NO (REFERENCE)	REV	N/P	STATUS	MAT'L SIZE	MAT'L SPEC		SIZE (mm2)	ID	DIA MAX	TYPE	A ±0.4	B ±0.4	H ±0.4	H1 ±0.4
								CABLE				DIMENSIONS			
13663799	-	02	A2		0.3 x 24.2	M3713C28 (ALTERNATIVE)	BRASS TIN PLATED	>0.5-1.25			103	2.6	4.4	2.7	4.7
15491516	-	05	A2		0.3 x 25	M3713803 (ONLY FOR BRAZIL)		>0.5-1.5		2.6	103	3.0	5.0	3.3	4.7
					0.3 x 24.2	M3713C28 (ALTERNATIVE)									
15491515	-	04	A2		0.3 x 25	M3713803 (ONLY FOR BRAZIL)		03-0.5		1.9	102	2.5	4.4	2.3	4.2
					0.3 x 24.2	M3713C28 (ALTERNATIVE)									
15369136	EPC 2700012/3	18	A2		0.3 x 25	M3713803 (ONLY FOR BRAZIL)		2.5		3.0	101	3.4	5.0	3.6	4.7
15327502	EPC 2700012/2	18	A2		0.3 x 25	M3713803 (ONLY FOR BRAZIL)		1.0-1.5		2.4	101	3.0	5.0	3.3	4.7
15327501	EPC 2700012/1	19	A2		0.3 x 25	M3713803 (ONLY FOR BRAZIL)		0.3-0.75		1.7	101	2.5	4.4	2.3	4.2

DIMENSIONS ENCLOSED IN ( ) INDICATE REFERENCE DIMENSIONS AND NO TOLERANCE LIMITS ARE ESTABILISHED

DELPHI
Automotive Systems

MATERIAL SPEC
SEE CHART

SUBSTANCES OF CONCERN AND RECYCLED CONTENT PER DELPHI-A 10949001

PART DRAWING

DISTR CODE: D

CODE NUMBER	DWG DATE	SCALE
6900	24JL99	DO NOT SCALE
QC SPEC	STYLE	VOLUME cm 3

PART GEOMETRY
2D

ACAD
CHANGE RESTRICTED
NO MANUAL CHANGES

UNLESS OTHERWISE SPECIFIED:
THIS DOCUMENT IS IN ACCORDANCE WITH ASME Y14.5M - 1994 AS AMENDED BY THE GM GLOBAL DIMENSIONING AND TOLERANCING ADDENDUM - 1997. ALL GEOMETRIC TOLERANCES AND RELATED DATUMS APPLY RFS. RULE #1 (PERFECT FORM AT MMC) DOES NOT APPLY WHEN RELATIONSHIP BETWEEN FEATURES IS ESTABLISHED BY ORIENTATION OR LOCATION TOLERANCES. SEPARATE POSITION CALLOUTS MAY BE GAGED SEPARATELY REGARDLESS OF DATUM REFERENCES.

COPY OF MATH DATA
DO NOT SCALE

METRIC
UNLESS OTHERWISE SPECIFIED, ALL DIMENSIONS ARE IN MILLIMETERS

REFERENCE

		DATE
DR	TUDESCHINI	05DE01
APVD1	AILTON	05DE01
APVD2	D'UNHAO	05DE01
APVD3	GROPPO	05DE01
APVD4		
APVD5		

FIRST ANGLE PROJECTION

DRAWING NAME
TAXI TERMINAL F BFC 180 UNSLD
(.070 SERIES)

SHEET NUMBER: 1 OF 1

DRAWING NUMBER: 15446831

DWG STATUS		
STG	REV	N/P
-	12	-

SIZE: A2

Mouser Electronics

Authorized Distributor

Click to View Pricing, Inventory, Delivery & Lifecycle Information:

Aptiv:
15491516 15491515