SYMBOL DEFINITION		
A DIMENSION WITHOUT AN INSPECTION REPORT SYMBOL ⬭ DOES NOT REQUIRE INSPECTION. IT MAY BE CONTROLLED ON THE INDIVIDUAL COMPONENT DRAWING.	TOTAL NO OF INSPECTIONS REQUIRED	4
	LAST NO. USED	4

MISSING SYMBOLS
NO MISSING SYMBOL NUMBER

DWG STATUS					ZONE	REVISION HISTORY	AUTH	DR	APVD 1	APVD 2
DATE	STG	REV	N/P	CHG						
14DE94	R	H	-	-		REDRAWN,REVISED,& MAT'L WAS EPDM-BLK	162111	JMH	TM	
14DE94	R	J	-	-		REVISED	162129	JMH	TM	
10MR95	R	J	1	-		REVISED	162145	RJD	RJD	
19SE95	R	K	-	-		REVISED	166414	CTC	AUG	
26JA96	R	L	-	-		REVISED	166457	RMM	RMM	
26FE98	R	L	1	-		REVISED	183358	JMH	JMH	
02JN98	R	L	2	-		DELETED QUALIFICATION NOTE	187712	JMH	JMH	
15AP99	R	L	3	-		REDRAWN TO PD/TQD STANDARD	192521	JCH	JCH	
14JN99	R	L	4	-		ADDED ASTM MAT'L CALL-OUT FOR DELPHI COMPOUND	192574	JCH	JCH	
09AU99	R	L	5	-		REVISED ASTM MAT'L CALL-OUT	192589	JCH	JCH	
04JN02	R	L	6	-		ADDED M SPEC M4440002; REMOVED ASTM MAT'L CALL-OUT; UPDATED PRINT TO CURRENT FORMAT	226349	PJC	PJC	JMW

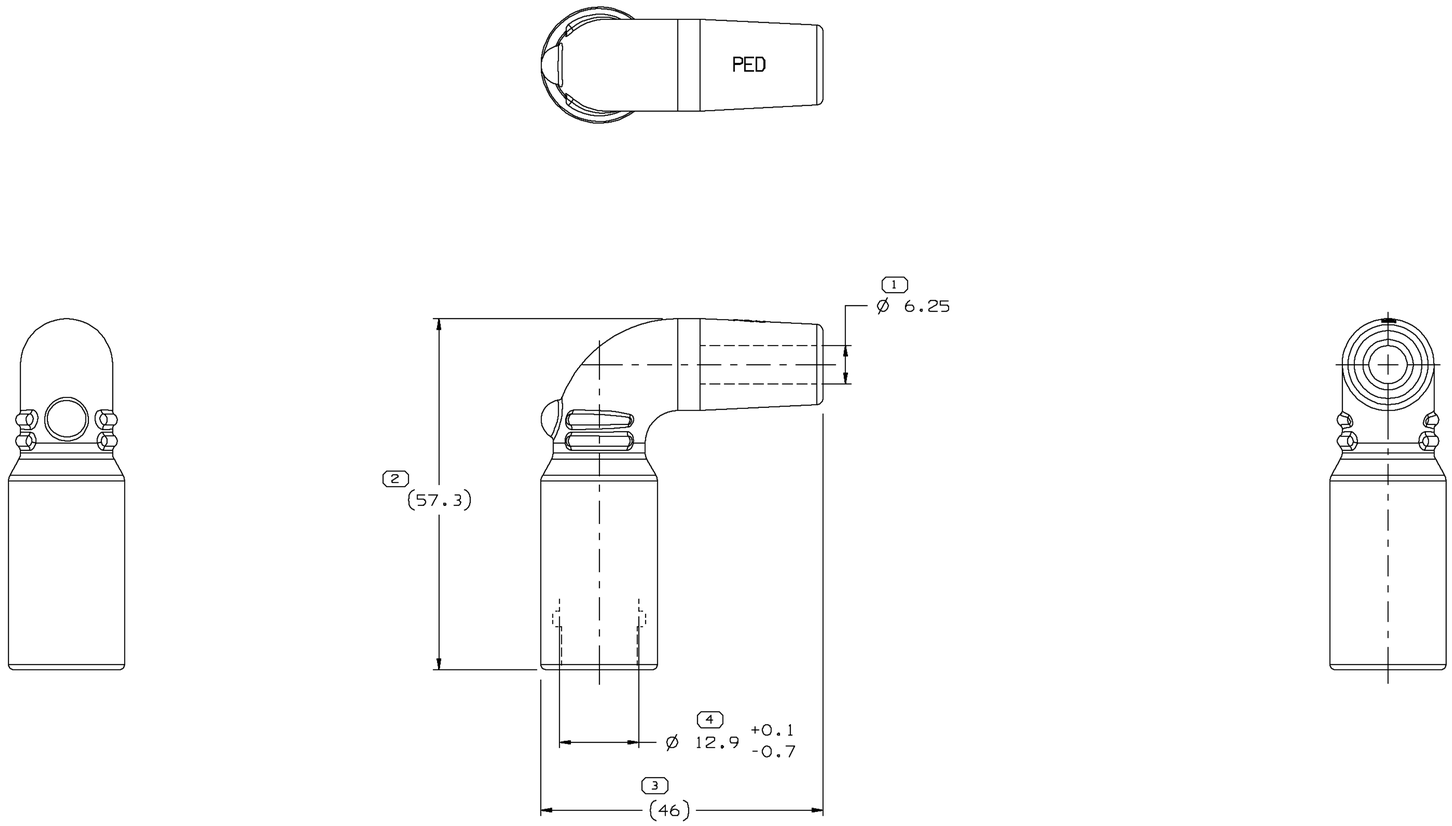

SCALE 1:1

NOTES:

1. UNLESS OTHERWISE SPECIFIED AND/OR INDICATED: DIMENSIONS ARE TO FACE OF VIEW SHOWN AND AUTOMATICALLY ROUNDED BY COMPUTER FOR INSPECTION. (SEE MATH MODEL FOR PRECISE DIMENSION) FOR ALL OTHER DIMENSIONS NOT SHOWN BUT REQUIRED FOR TOOL BUILD, SEE MATH MODEL FOR PRECISE TOOL PATH DATA.
2. ALL RADII 0.8 UNLESS OTHERWISE SPECIFIED.
3. PED AND CAVITY NUMBER ARE 2.3 REF. X 0.1 RAISED AND ARE LOCATED ON ANY EXTERIOR SURFACE VISIBLE AT FINAL ASSEMBLY.

4 PROCESS SENSITIVE DIMENSION

DIMENSIONS ENCLOSED IN ( ) INDICATE REFERENCE DIMENSIONS AND NO TOLERANCE LIMITS ARE ESTABLISHED

DIMENSIONAL RANGE (MM)				CHART C
FROM	>0	>25	>60	>80
TO	25	60	80	
TOLERANCE UNLESS OTHERWISE SPECIFIED				
	±0.3	±0.5	±0.6	±0.75%
ANGULAR TOLERANCE ±2°				

DWG TYPE: PART DRAWING

STYLE:

VOLUME (CM³): 11.211

DISTR CODE:

ROUTING: 6901

UNLESS OTHERWISE SPECIFIED

THIS DOCUMENT IS IN ACCORDANCE WITH ASME Y14.5M-1994 AS AMENDED BY THE GM GLOBAL DIMENSIONING AND TOLERANCING ADDENDUM - 1997. ALL GEOMETRIC TOLERANCES AND RELATED DATUMS APPLY RFS. RULE #1(PERFECT FORM AT MMC) DOES NOT APPLY WHEN RELATIONSHIP BETWEEN FEATURES IS ESTABLISHED BY ORIENTATION OR LOCATION TOLERANCES. SEPARATE POSITION CALLOUTS MAY BE GAGED SEPARATELY, REGARDLESS OF DATUM REFERENCE.

REFERENCE:

THIRD ANGLE PROJECTION

DO NOT SCALE

USE MATH DATA

UNIGRAPHICS

DELPHI

DELPHI PACKARD ELECTRIC SYSTEMS
WARREN, OH

		DATE
DR	JOHN THIESS	15SE92
APVD1	J. COLDSNOW	050C92
APVD2	S. NADASKY	070C92
APVD3	PAT J COLONNA	05JN02
APVD4	JAMES M WESTON	05JN02
APVD5		

SUBSTANCES OF CONCERN AND RECYCLED CONTENT PER DELPHI 10949001

MATERIAL: M4440002

DRAWING NAME: 90 DEG DIST NIPPLE-BLK

DRAWING NUMBER: 12132219

SIZE	SCALE	FRAME NO	SHEET NO	STG	REV	N/P
A1	2:1	1 OF 1	1 OF 1	R	L	6

Mouser Electronics

Authorized Distributor

Click to View Pricing, Inventory, Delivery & Lifecycle Information:

Aptiv:
12132219