SYMBOL DEFINITION		
A DIMENSION WITHOUT AN INSPECTION REPORT SYMBOL ( ) DOES NOT REQUIRE INSPECTION. IT MAY BE CONTROLLED ON THE INDIVIDUAL COMPONENT DRAWING.	TOTAL NO OF INSPECTIONS REQUIRED	17
	LAST NO. USED	17

MISSING SYMBOLS
NO MISSING SYMBOL NUMBER

DWG STATUS					ZONE	REVISION HISTORY	AUTH	DR	APVD 1	APVD 2
DATE	STG	REV	N/P	CHG						
30JL02	R	05	-	-		CLEARED REV COLUMN; ALL PARTS - REDRAWN TO PD & UPDATED PDM ATTRIBUTES	226419	LOA	JAA	TTP
05FE03	R	06	-	-		REVISED NOTE SYMBOL 274 IN TOD	236543	LMB	LMB	SCH
22JL03	R	07	-	-		ADDED DIM 2.75±0.1 FOR SPRING BACK	243779	RH	RH	SCH
24SE04	R	08	-	-		ADDED TERMINAL I.D. NOTE	259075	MDH	AUG	MKM
08FE05	R	09	-	-		13520635 - RELEASED	263660	MM	MM	JS
03AU06	R	10	-	-		ALL PARTS - ADDED SEALING INFORMATION TO CHART	283048	AGB	CJP	JAS

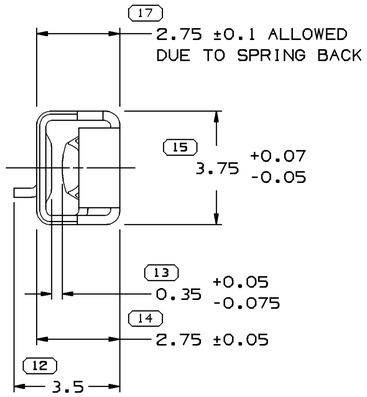

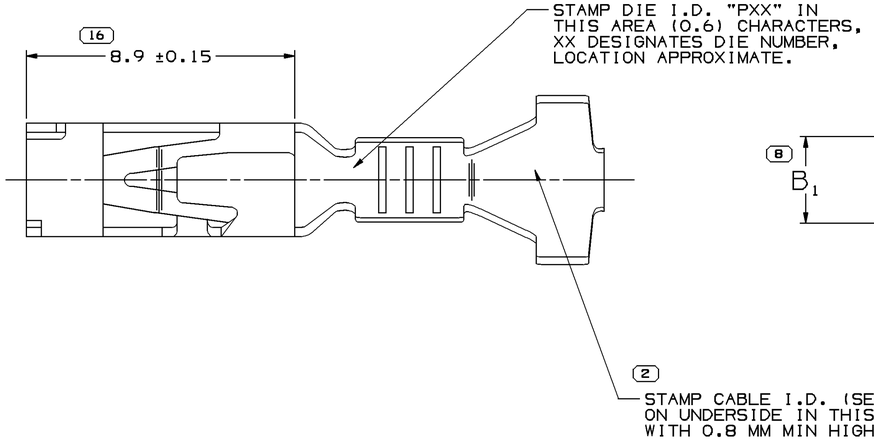

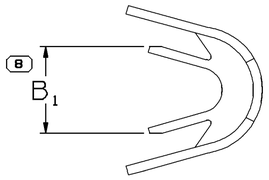

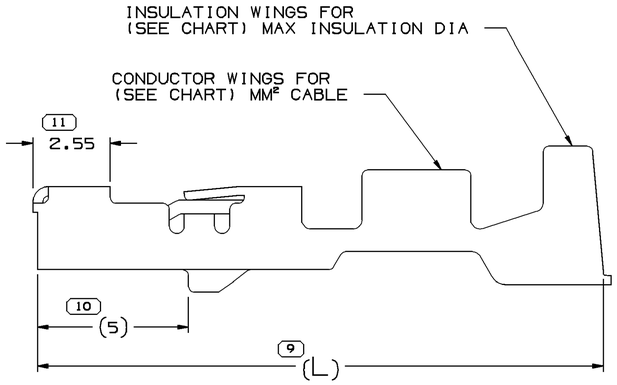

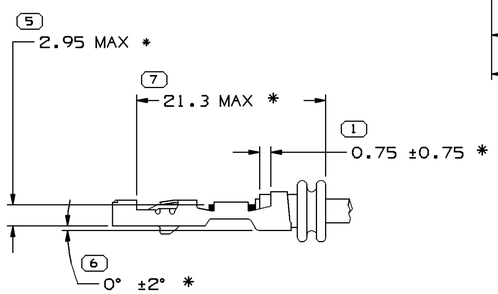

2 RIB SEAL POSITION REF
AND TERMINAL & CABLE ALIGNMENT
SCALE 5:1

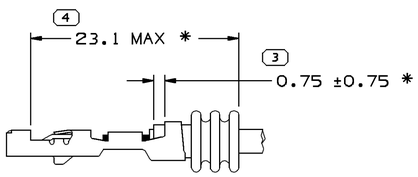

3 RIB SEAL POSITION REF
SCALE 5:1

NOTES

1. UNLESS OTHERWISE SPECIFIED AND/OR INDICATED:
   DIMENSIONS ARE TO FACE OF VIEW SHOWN AND AUTOMATICALLY ROUNDED BY COMPUTER FOR INSPECTION (SEE MATH MODEL FOR PRECISE DIMENSIONS). FOR ALL OTHER DIMENSIONS NOT SHOWN BUT REQUIRED FOR TOOL BUILD, SEE MATH MODEL FOR PRECISE TOOL PATH DATA.
2. REFERENCE MATING COMPONENTS OR EQUIVALENT:

   TERMINAL 15304727

3. * DENOTES DIMENSIONS MADE AT CUT OFF AND CRIMP DIE.

PART NO	REV	N/P	STATUS	MAT'L SIZE	MAT'L SPEC	SIZE (MM²)	ID	DIA	TYPE	$B_{1\pm0.2}$	(L)	TYPICAL SEALING CAVITY CONFIG.
				PLATED		CABLE						
15304717	E5	-	RESTRICTED	0.3 X 27.38	M3659A23 C42500 EX HD	1.5 - 2.5	14	3 - 2.2	101	3.75	18.9	5.2 DIA. ROUND
15304716	E5	-	RESTRICTED	0.3 X 27.38	M3659A23 C42500 EX HD	0.75 - 1	17	2.25 - 1.7	101	2.65	18.9	5.2 DIA. ROUND
15304715	E5	-	RESTRICTED	0.3 X 27.38	M3659A23 C42500 EX HD	0.35 - 0.5	21	1.85 - 1.2	101	2.1	18.9	5.2 DIA. ROUND
13520635	01	AA	RESTRICTED	0.3 X 27.38	M3659A23 C42500 EX HD	2.0 - 3.0	13	3.2	101	4.0	18.9	5.2 DIA. ROUND

15 PROCESS SENSITIVE DIMENSION

DIMENSIONS ENCLOSED IN ( ) INDICATE REFERENCE DIMENSIONS AND NO TOLERANCE LIMITS ARE ESTABLISHED

DIMENSIONAL RANGE (MM)		CHART D
FROM	0	>12
TO	12	
TOLERANCE UNLESS OTHERWISE SPECIFIED		
±0.1		±0.2
ANGULAR TOLERANCE ±2°		

DWG TYPE: PART DRAWING

STYLE

VOLUME (CU³) | DISTR CODE

UNLESS OTHERWISE SPECIFIED

THIS DOCUMENT IS IN ACCORDANCE WITH ASME Y14.5M-1994 AS AMENDED BY THE GM GLOBAL DIMENSIONING AND TOLERANCING ADDENDUM - 1997. ALL GEOMETRIC TOLERANCES AND RELATED DATUMS APPLY RFS. RULE #1(PERFECT FORM AT MMC) DOES NOT APPLY WHEN RELATIONSHIP BETWEEN FEATURES IS ESTABLISHED BY ORIENTATION OR LOCATION TOLERANCES. SEPARATE POSITION CALLOUTS MAY BE GAGED SEPARATELY, REGARDLESS OF DATUM REFERENCE.

ALL DIMENSIONS ARE IN MILLIMETERS

REFERENCE

THIRD ANGLE PROJECTION

DO NOT SCALE

USE MATH DATA

CAD UG UNIGRAPHICS

DELPHI

DELPHI PACKARD ELECTRIC SYSTEMS
WARREN, OH

		DATE
DR		
APVD1	C. MARGRAVE	04FE98
APVD2	C. MARGRAVE	04FE98
APVD3	S. C. HSIEH	20FE98
APVD4		
APVD5		

SUBSTANCES OF CONCERN AND RECYCLED CONTENT PER DELPHI 10949001

MATERIAL: SEE CHART

DRAWING NAME: TAXI TERM F GT 280 SEALED

DRAWING NUMBER: 15336713

SIZE	SCALE	FRAME NO	SHEET NO	STG	REV	N/P
A1	10:1	1 OF 1	1 OF 1	R	10	-

User: vcsfg
Part: 15336713-CUS01-S01 Date: 16-Aug-06 Time: 18:39
Message:

Mouser Electronics

Authorized Distributor

Click to View Pricing, Inventory, Delivery & Lifecycle Information:

Aptiv:
13520635