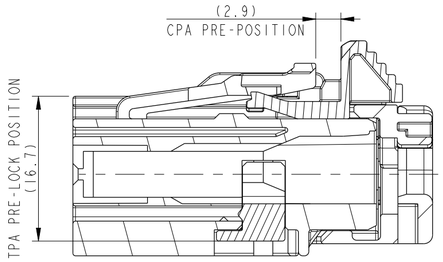

TPA & CPA PRE-LOCK POSITION
DELIVERY CONDITION
FROM FCI TO HARNESS MAKER

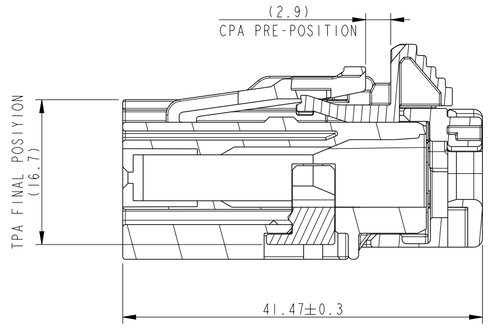

TPA FINAL POSITION
CPA PRE-LOCK POSITION

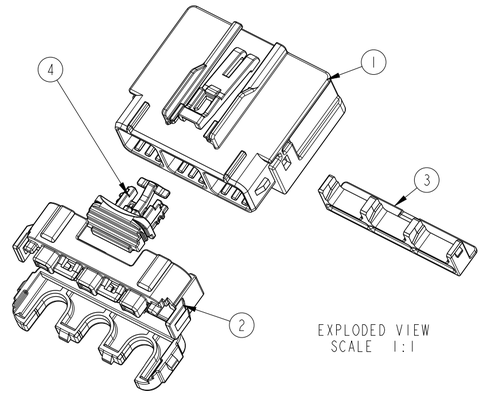

EXPLODED VIEW
SCALE 1:1

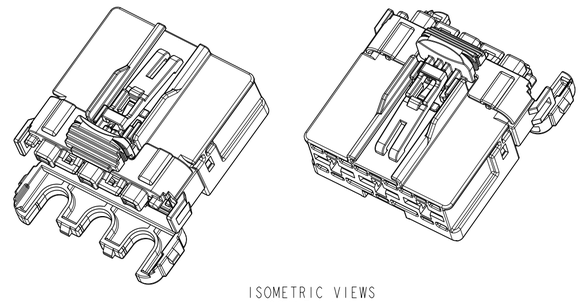

ISOMETRIC VIEWS
SCALE 1:1

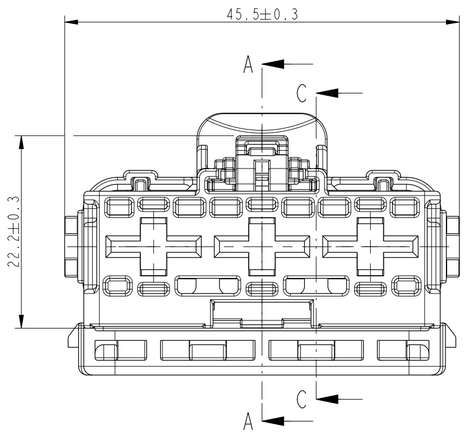

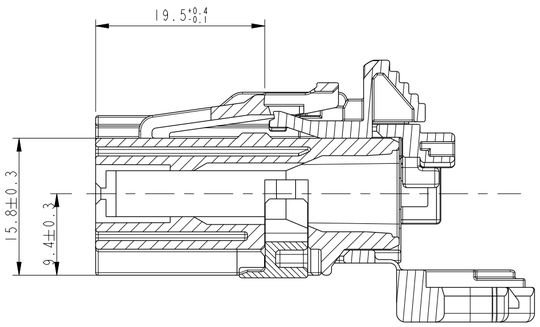

SECTION A-A

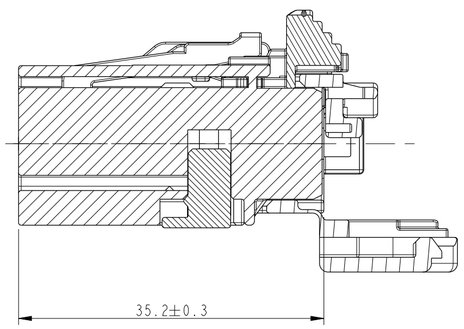

SECTION C-C

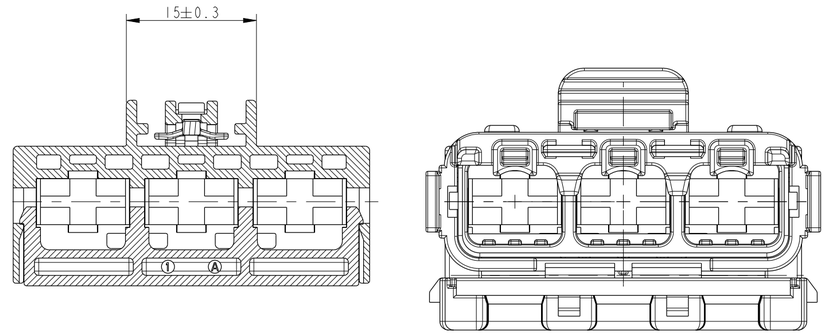

SECTION B-B

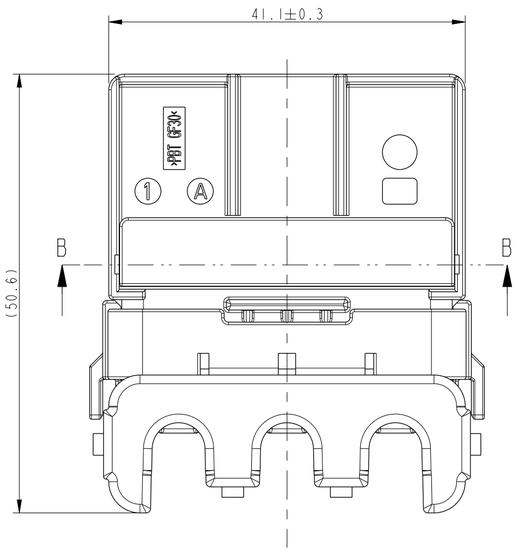

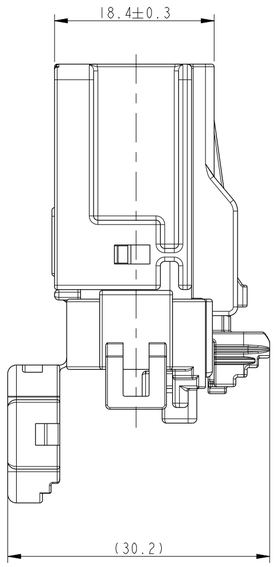

NOTES
1. NOT SPECIFIED TOLERANCE : DIN ISO 2768(M)
2. MUST BE FREE OF CRACK, FLOW MARK, FLASH, BURR ETC THAT AFFECT FUNCTION OF PRODUCT
3. THIS PRODUCT MUST MEET ES91500-00 (Rev. L)
4. PPLICABLE COUNTER PART: F739110, F049110
5. UNLESS OTHERWISE SPECIFIED TO VENDOR SPECIFICATION.

DIN ISO 2768	Tolerance Class medium (m)						
Linear dimensions except for broken edges	Permissible deviations for basic size range [mm]						
	0.5 *) up to 3	over 3 up to 6	over 6 up to 30	over 30 up to 120	over 120 up to 400	over 400 up to 1000	over 1000 up to 2000
	±0.1	±0.1	±0.2	±0.3	±0.5	±0.8	±1.2
Broken edges (radii, chamfers)	Permissible deviations for basic size range [mm]						
	0.5 *) up to 3		over 3 up to 6		over 6		
	±0.2		±0.5		±1		
Angular dimensions	Permissible deviations for ranges of lengths, in mm, of the shorter side of the angle concerned						
	up to 10	over 10 up to 50	over 50 up to 120	over 120 up to 400	over 400		
	±1°	±0° 30′	±0° 20′	±0° 10′	±0° 5′		

*) For nominal sizes below 0.5mm, the deviations shall be indicated adjacent to the relevant nominal size(s).

ECN-NO. ECN 번호	POSITION 위 치	CHANGE DESCRIPTION 변 경 사 항
ECN-12-00797	-	-
	-	-
	-	-
	-	-
	A-5	Color Changed of RETAINER

RETAINER VIEW	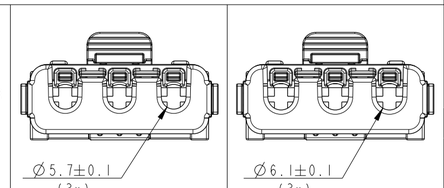
	Ø5.7±0.1 (3x) / Ø6.1±0.1 (3x)
P/N	F826210 (8SQ: Ø5.7) / F819110 (10SQ: Ø6.1)

REF	F826210 MOBIS TYPE	F819110 MANDO TYPE	DESIGNATION	MATERIAL	COLOR	FCI P/N
4	○	○	CPA	PBT	LIGHT YELLOW	S866210
3	○	○	TPA	PBT GF30	NATURAL	S859110
2		○	RETAINER	PA66	LIGHT BLUE	S080310
	○		RETAINER	PA66	BLACK	S169110
1	○	○	FEMALE HOUSING	PBT GF30	DARK GRAY	S749110

ASSOCIATED PARTS			
FEMALE TERMINALS	PART NUMBER	WIRE SIZE RANGE (mm^2)	TYPE
DCS1 9.5mm Box	6 007 04 71	6.00-10.00	Female

COPYRIGHT DELPHI CORPORATION AND/OR ITS AFFILIATES. ALL RIGHTS RESERVED. REVISED
THIS DRAWING IS THE PROPERTY OF DELPHI CORPORATION AND CONTAINS DELPHI CONFIDENTIAL INFORMATION. THE REPRODUCTION, DISTRIBUTION AND UTILIZATION OF THIS DOCUMENT OR ITS RELATED CAD MATH DATA, AS WELL AS COMMUNICATION OF ANY CONTENT TO OTHERS, WITHOUT EXPRESS AUTHORIZATION, IS PROHIBITED.
이 도면상 델파이 주식 회사의 재산이 며 델파이 기밀 정보를 포함 합니다. 재생산, 유통 및 공중에게 준비 또는 관련된 CAD 수학 데이터, 뿐만 아니라 통신의 텍스트 여스의 승인 없이 다른 사람에 게 어떤 근본으로 금합니다.

TOLERANCES 공 차	SEE TABLE
COUNTERPART Nr. 상대물 품번	SEE NOTES
DO NOT MEASURE DRAWING 도면을 측정하지 말것	
MATERIAL : 재 질 :	SEE TABLE
COLOUR : 색 상 :	SEE TABLE
SURFACE FINISH 표면 처리	-
TOOL NO. 금형 번호	-
ECO Loc. Code ECO 위치코드	KN

PRODUCT SPEC. 제품 규격	PACKAGING SPEC. 포장 규격	APPLICATION SPEC. 사용 규격
KN-11-007	KNP-11-016	KNF-11-007

	DATE 날 짜	NAME 이 름
CREATED BY 작 성	2011/05/09	S s RAMASAMY
MODIFIED BY 수 정	2013/03/04	SeungWon CHOI
CHECKED BY 검 토	2013/03/04	JuWon SEO
APPROVED BY 승 인	2013/03/06	MinYoung LEE
FILE NAME 파 일 명	PCC0737307	

DELPHI
DELPHI PACKARD ELECTRICAL/ELECTRONIC ARCHITECTURE
NAMYANG, KOREA

TITLE 품 명: 3 Way Female Assembly
PROJECT 프로젝트명: 3 Way DCS9.5 Female Connector
ESR NO. ESR 번호: AP-090043
CAT. NO. 카테 번호: -
DOCUMENT UNDER PDS CONTROL. PDS에 의해 관리되는 문서임.
NO MODIFICATION ALLOWED OUTSIDE. 외부에서 수정은 허용되지 않음.

THIRD ANGLE 삼 각 법 | DIMENSION IN MILLIMETERS 치수단위 밀리미터 | CAD SYSTEM pro / eng. | DWG SIZE 도면 크기 A2

DRAWING NUMBER 도 면 번 호: PCC0737307
REV. 개정: F
STATE 상 태: SERIAL RELEASED
SHEET 도면수: 1 of 1 의
PART NUMBER 제 품 번 호: See Table
REV. 개정: -
APPROVAL LEVEL 승인 수준: -
SCALE 축 척: 2:1

Mouser Electronics

Authorized Distributor

Click to View Pricing, Inventory, Delivery & Lifecycle Information:

Aptiv:
33504005