SYMBOL DEFINITION		
A DIMENSION WITHOUT AN INSPECTION REPORT SYMBOL ⬭ DOES NOT REQUIRE INSPECTION. IT MAY BE CONTROLLED ON THE INDIVIDUAL COMPONENT DRAWING.	TOTAL NO OF INSPECTIONS REQUIRED	30
	LAST NO. USED	30

MISSING SYMBOLS
NO MISSING SYMBOL NUMBER

DATE	STG	REV	N/P	CHG	ZONE	REVISION HISTORY	AUTH	DR	APVD 1	APVD 2
25JL16	R	01	-	-	-	ADD 33351377 SINGLE WIRE SEAL		KBK	JJY	PJH

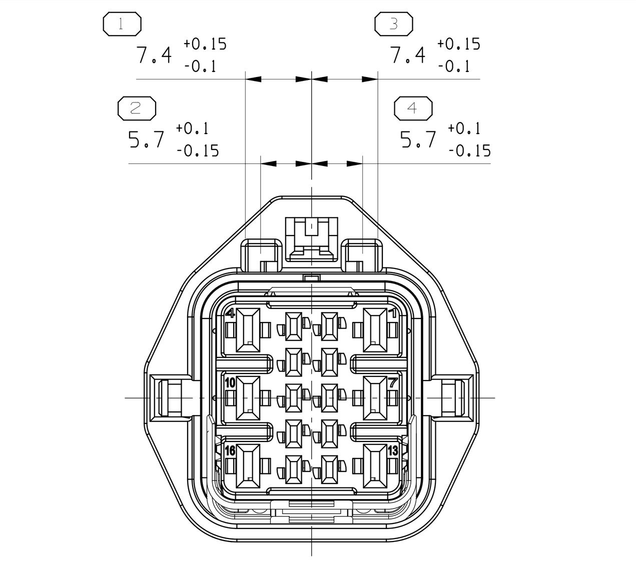

CODING A

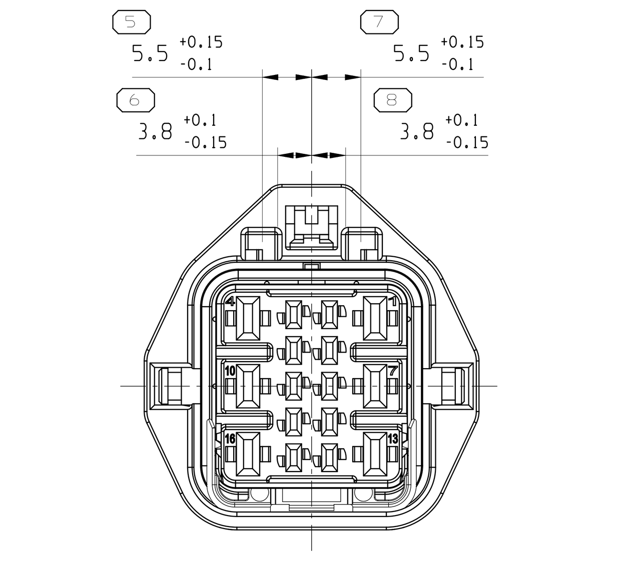

CODING B

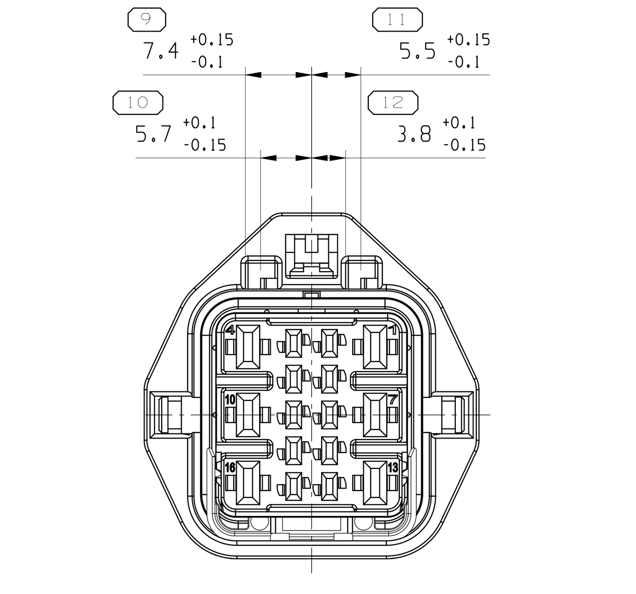

CODING C

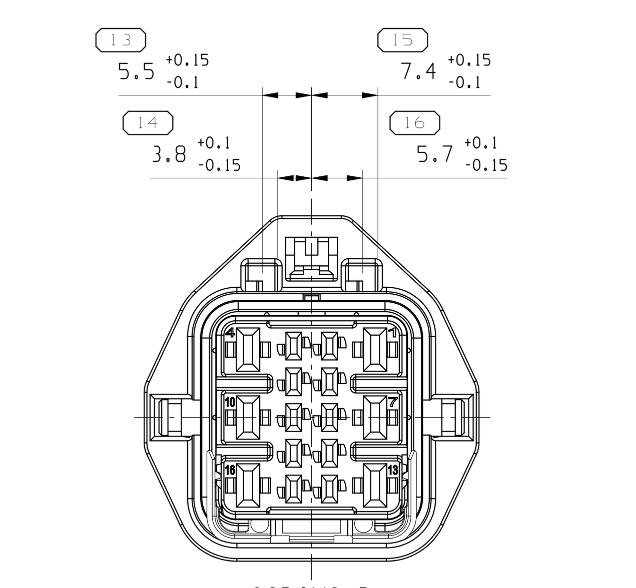

CODING D

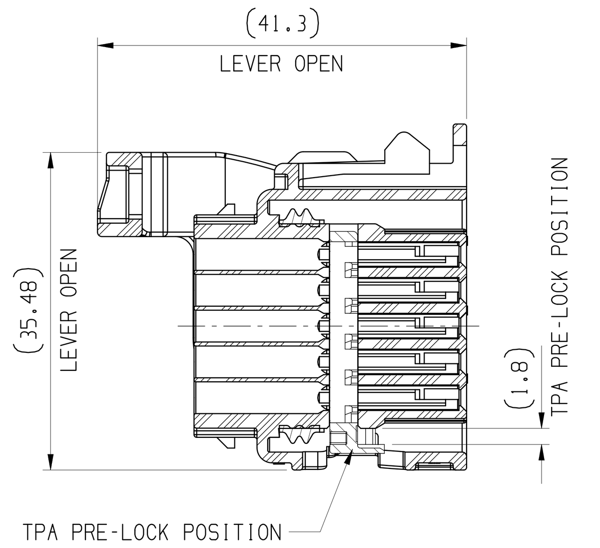

SECTION A-A

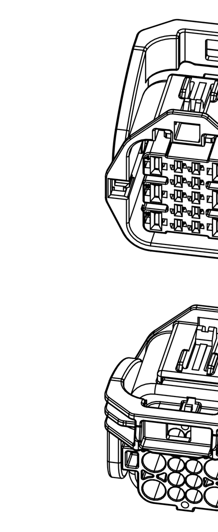
ISOMETRIC VIEW
SCALE 1:1

LEVER OPEN & TPA PRE-LOCK POSITION
DELIVERY CONDITION FROM DELPHI TO HARNESS MAKER

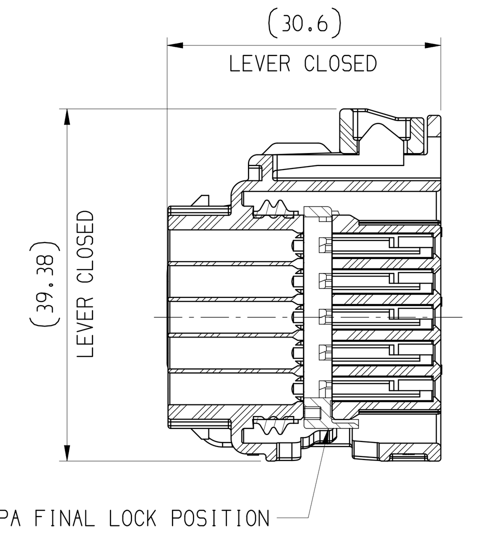

SECTION A-A

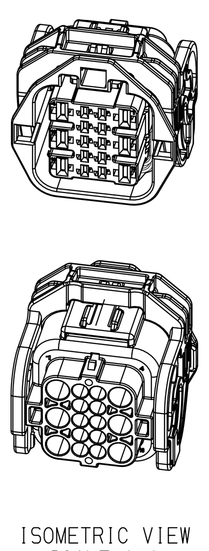
ISOMETRIC VIEW
SCALE 1:1

LEVER CLOSED &
TPA FINAL-LOCK POSITION

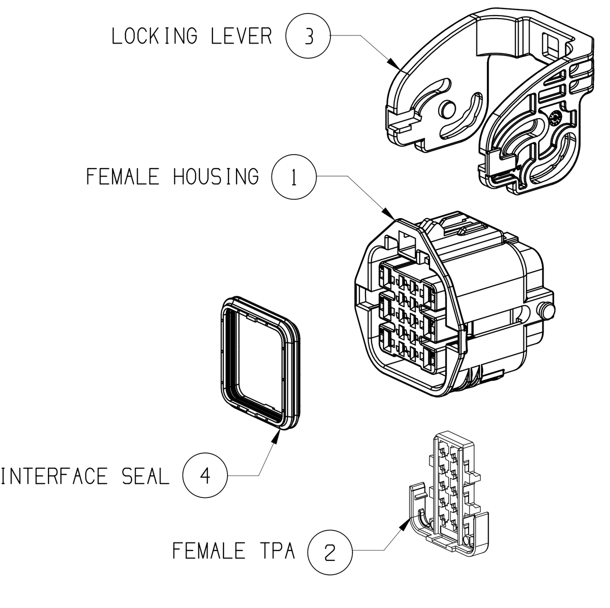

EXPLODED VIEW
SCALE 1:1

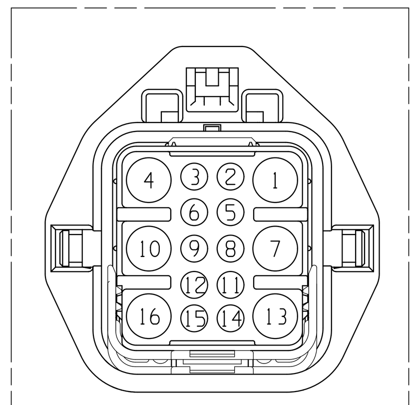

SYMBOL

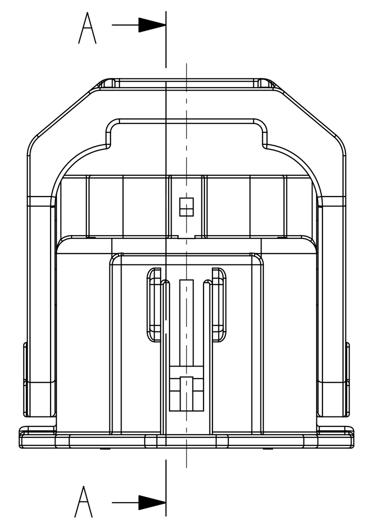

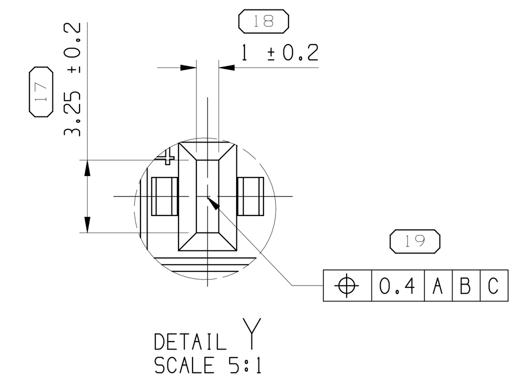

DETAIL Y
SCALE 5:1

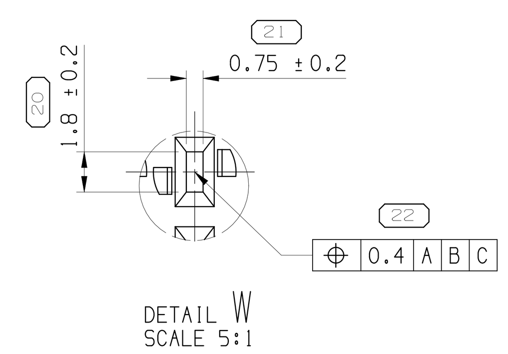

DETAIL W
SCALE 5:1

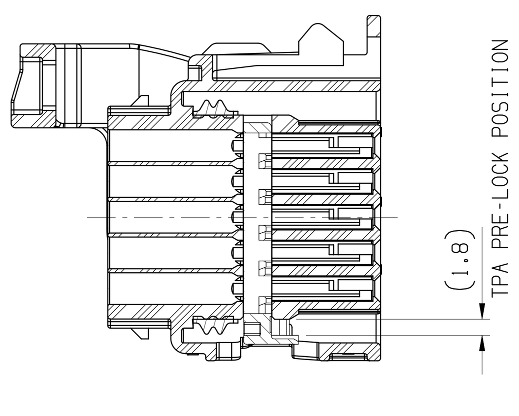

SECTION A-A

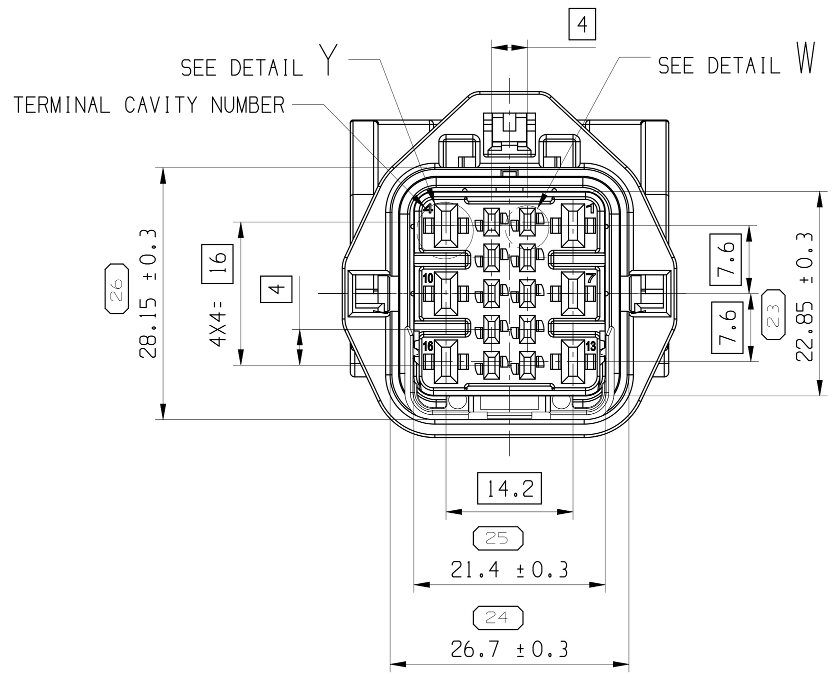

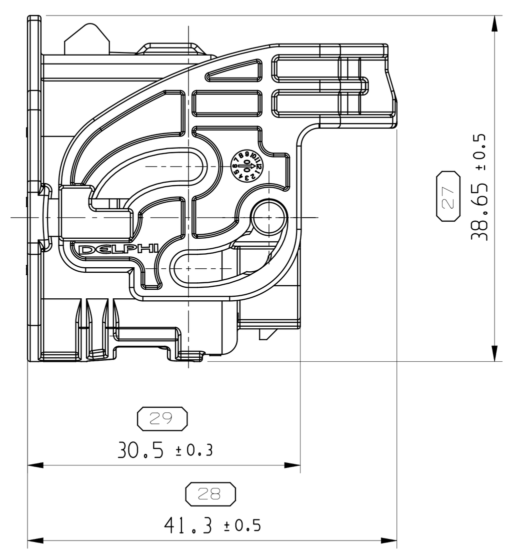

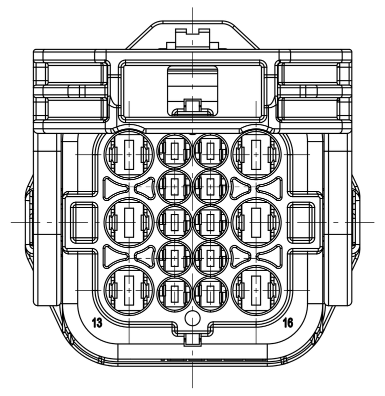

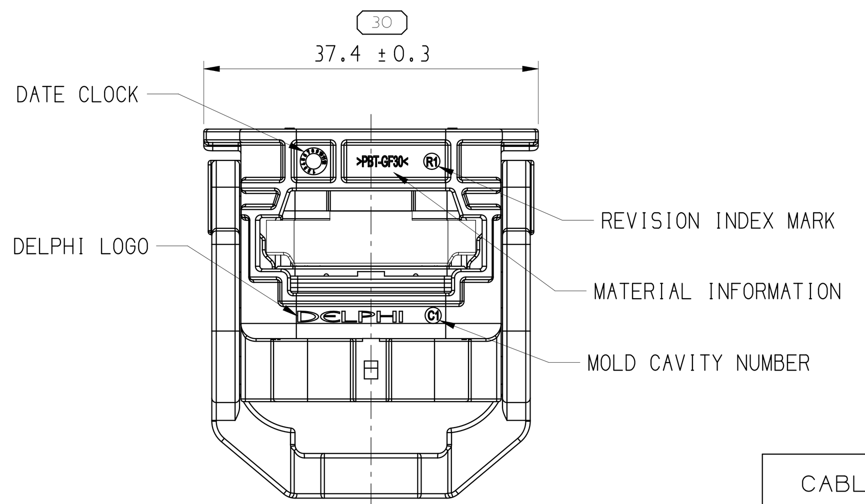

NOTES:

1 .NOT SPECIFIED TOLERANCE : ISO 2768(m)

2. MUST BE FREE OF CRACK,FLOW MARK,FLASH,BURR ETC THAT AFFECT FUNCTION OF PRODUCT

3. MUST MEET HMC SPEC ES91500-00 UNLESS OTHERWISE SPECIFIED TO VENDOR SPECIFICATION.

4. APPLICABLE MALE CONNECTOR :
33402163 (A TYPE), 33402164 (B TYPE)
33402165 (C TYPE), 33402166 (D TYPE)

◯ 5. "◯" LATEST REVISION SYMBOL (X2)

TERMINAL	PART NUMBER	CABLE SIZE (mm^2)	PLATING
DCK1.5 SEALED FEMALE TERMINAL	60002041	1.25 - 1.5	1-3 um Sn
	60002034	0.5 - 1.0	0.8 um Au
	60002031	0.5 - 1.0	1-3 um Sn
DCK2.8 SEALED FEMALE TERMINAL	60013744	1.25 - 2.0	0.8 um Au
	60013741		1-3 um Sn
	60013734	0.5-1.0	0.8 um Au
	60013731		1-3 um Sn

CODING	TYPE	REP.	PART NUMBER	PART REV	DESCRIPTION	QTY	MATERIAL	COLOR	REMARK
A TYPE	Assembly	-	33402152	01	DCK 1.5/2.8 Sealed Female Connector Code A	-	-	-	
	Housing	1	33402156	01	DCK 1.5/2.8 Sealed Female Housing Code A	1	PBT GF30%	Black	
	TPA	2	33402162	01	DCK 1.5/2.8 Sealed Female TPA	1	PBT GF30%	Blue	
	Lever	3	33402161	01	DCK 1.5/2.8 Sealed Female Lever	1	PA66 GF30%	Black	
	Interface Seal	4	33402160	01	DCK 1.5/2.8 Sealed Female Interface Seal	1	Silicon Rubber	Green	
B TYPE	Assembly	-	33402153	01	DCK 1.5/2.8 Sealed Female Connector Code B	-	-	-	
	Housing	1	33402157	01	DCK 1.5/2.8 Sealed Female Housing Code B	1	PBT GF30%	LT Gray	
	TPA	2	33402162	01	DCK 1.5/2.8 Sealed Female TPA	1	PBT GF30%	Blue	
	Lever	3	33402161	01	DCK 1.5/2.8 Sealed Female Lever	1	PA66 GF30%	Black	
	Interface Seal	4	33402160	01	DCK 1.5/2.8 Sealed Female Interface Seal	1	Silicon Rubber	Green	
C TYPE	Assembly	-	33402154	01	DCK 1.5/2.8 Sealed Female Connector Code C	-	-	-	
	Housing	1	33402158	01	DCK 1.5/2.8 Sealed Female Housing Code C	1	PBT GF30%	Brown	
	TPA	2	33402162	01	DCK 1.5/2.8 Sealed Female TPA	1	PBT GF30%	Blue	
	Lever	3	33402161	01	DCK 1.5/2.8 Sealed Female Lever	1	PA66 GF30%	Black	
	Interface Seal	4	33402160	01	DCK 1.5/2.8 Sealed Female Interface Seal	1	Silicon Rubber	Green	
D TYPE	Assembly	-	33402155	01	DCK 1.5/2.8 Sealed Female Connector Code D	-	-	-	
	Housing	1	33402159	01	DCK 1.5/2.8 Sealed Female Housing Code D	1	PBT GF30%	Dark Gray	
	TPA	2	33402162	01	DCK 1.5/2.8 Sealed Female TPA	1	PBT GF30%	Blue	
	Lever	3	33402161	01	DCK 1.5/2.8 Sealed Female Lever	1	PA66 GF30%	Black	
	Interface Seal	4	33402160	01	DCK 1.5/2.8 Sealed Female Interface Seal	1	Silicon Rubber	Green	

CABLE SEAL	TYPE	PART NUMBER	INSULATION (Ø)	CABLE SIZE (mm^2)	COLOR	REMARKS
DCS-2/DCK 1.5	Short	60993934	1.9 - 2.4	1.0 - 1.5	Yellow	
		60993928	1.6 - 1.9	0.5 - 0.75	Gray	
		60993913	1.2 - 1.6	0.35 - 0.5	Red	
	Long	F599700	2.0 - 2.4	1.0 - 1.5	Yellow	
		F410400	1.6 - 1.9	0.5 - 0.85	Gray	
		F310400	1.2 - 1.5	0.3 - 0.35	Red	
1.5 CAVITY PLUG		33402443	-	-	White	
DCS-2/DCK 2.8	Short	60994034	2.7 - 2.9	2.5	Yellow	
		60994023	2.0 - 2.7	1.5	Red-Brown	
	Long	F610400	2.0 - 2.7	1.0 - 2.0	Red	
		F510400	1.6 - 1.9	0.5 - 0.85	Blue	
	◯	33351377	2.0 - 2.7	1.0 - 2.0	Yellow	
2.8 CAVITY PLUG		60994007	-	-	Green	

DIN ISO 2768	Tolerance Class medium (m)						
Linear Dimensions except for broken edges	Permissible deviations for basic size range (mm)						
	0.5 *) up to 3	over 3 up to 6	over 6 up to 30	over 30 up to 120	over 120 up to 400	over 400 up to 1000	over 1000 up to 2000
	±0.1	±0.1	±0.2	±0.3	±0.5	±0.8	±1.2
Broken edges (radii, chamfers)	Permissible deviations for basic size range (mm)						
	0.5 *) up to 3		over 3 up to 6			over 6	
	±0.2		±0.5			±1	
	Permissible deviations for ranges of lengths, in mm, of the shorter side of the angle concerned						
Angular dimensions	up to 10	over 10 up to 50	over 50 up to 120		over 120 up to 400		over 400
	±1°	±0° 30'	±0° 20'		±0° 10'		±0° 5'

*) For nominal sizes below 0.5mm, the deviations shall be indicated adjacent to the relevant nominal size(s).

⬭ PROCESS SENSITIVE DIMENSION

DIMENSIONS ENCLOSED IN ( ) INDICATE REFERENCE DIMENSIONS AND NO TOLERANCE LIMITS ARE ESTABLISHED

DIMENSIONAL RANGE (MM)									CHART EI
FROM / TO	> 0 / 20	>20 / 30	> 30 / 70	> 70 / 100	>100 / 150	>150 / 200	>200 / 250	>250 / 300	>300 / 400
TOLERANCE UNLESS OTHERWISE SPECIFIED	±0.15	±0.2	±0.3	±0.4	±0.5	±0.6	±0.8	±1	±1.2
ANGULAR TOLERANCE ±2°									

A ▁▁ LINE DRAWN THROUGH A PART NUMBER INDICATES THAT PHYSICAL PARTS ARE NOT AVAILABLE FOR ORDERING.

PART NUMBERS THAT DO NOT HAVE A LINE PRESENT INDICATE THAT PHYSICAL PARTS ARE AVAILABLE FOR ORDERING.

CONTACT DELPHI SALES TO ASSURE AVAILABILITY OF PARTS.

DWG TYPE: PART DRAWING

STYLE

VOLUME (CM^3): -

DISTR CODE: D

UNLESS OTHERWISE SPECIFIED

THIS DOCUMENT IS IN ACCORDANCE WITH ASME Y14.5M-1994 AS AMENDED BY THE GM GLOBAL DIMENSIONING AND TOLERANCING ADDENDUM-2001. SEPARATE PATTERNS OF FEATURES MAY BE GAGED SEPARATELY REGARDLESS OF DATUM REFERENCES.

ALL DIMENSIONS ARE IN MILLIMETERS

REFERENCE

THIRD ANGLE PROJECTION

DO NOT SCALE

USE MATH DATA

CAD NX

DELPHI

DELPHI PACKARD ELECTRICAL/ELECTRONIC ARCHITECTURE
Chennai, India

COPYRIGHT DELPHI CORPORATION AND/OR ITS AFFILIATES. ALL RIGHTS RESERVED.

THIS DRAWING IS THE PROPERTY OF DELPHI CORPORATION AND CONTAINS DELPHI CONFIDENTIAL INFORMATION. THE REPRODUCTION, DISTRIBUTION AND UTILIZATION OF THIS DOCUMENT OR ITS RELATED CAD MATH DATA, AS WELL AS COMMUNICATION OF ANY CONTENT TO OTHERS, WITHOUT EXPRESS AUTHORIZATION, IS PROHIBITED.

		DATE
DR	KIM,BEOM-KYU	25JL16
APVD1	JUNG,JAE-YUP	25JL16
APVD2	PARK,JOO-HYUN	25JL16
APVD3		
APVD4		
APVD5		

SUBSTANCES OF CONCERN AND RECYCLED CONTENT PER DELPHI 10949001

MATERIAL: SEE TABLE

DRAWING NAME: 16 WAY FEMALE ASSEMBLY

DRAWING NUMBER: 33367464

SIZE	SCALE	FRAME NO	SHEET NO	STG	REV	N/P
A0	2:1	1 OF 1	1 OF 1	R	01	-

Mouser Electronics

Authorized Distributor

Click to View Pricing, Inventory, Delivery & Lifecycle Information:

Aptiv:
33402152-B 33402152